National Semiconductor

October 2003

LM2676
SIMPLE SWITCHER® High Efficiency 3A Step-Down Voltage Regulator

General Description

The LM2676 series of regulators are monolithic integrated circuits which provide all of the active functions for a step-down (buck) switching regulator capable of driving up to 3A loads with excellent line and load regulation characteristics. High efficiency (>90%) is obtained through the use of a low ON-resistance DMOS power switch. The series consists of fixed output voltages of 3.3V, 5V and 12V and an adjustable output version.

The SIMPLE SWITCHER concept provides for a complete design using a minimum number of external components. A high fixed frequency oscillator (260KHz) allows the use of physically smaller sized components. A family of standard inductors for use with the LM2676 are available from several manufacturers to greatly simplify the design process.

The LM2676 series also has built in thermal shutdown, current limiting and an ON/OFF control input that can power down the regulator to a low 50µA quiescent current standby condition. The output voltage is guaranteed to a ±2% tolerance. The clock frequency is controlled to within a ±11% tolerance.

Features

- Efficiency up to 94%
- Simple and easy to design with (using off-the-shelf external components)
- 150 mΩ DMOS output switch
- 3.3V, 5V and 12V fixed output and adjustable (1.2V to 37V) versions
- 50µA standby current when switched OFF
- ±2%maximum output tolerance over full line and load conditions
- Wide input voltage range: 8V to 40V
- 260 KHz fixed frequency internal oscillator
- −40 to +125˚C operating junction temperature range

Applications

- Simple to design, high efficiency (>90%) step-down switching regulators
- Efficient system pre-regulator for linear voltage regulators
- Battery chargers

Typical Application

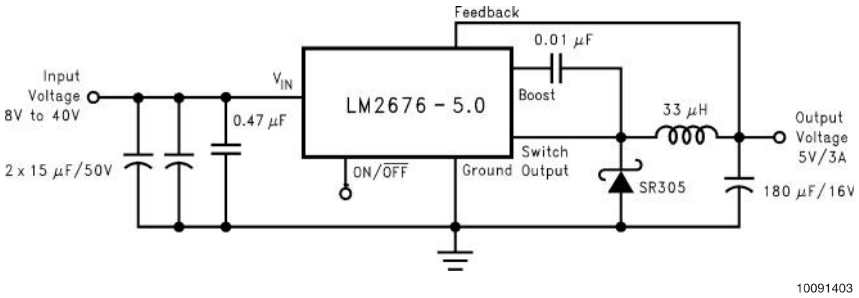

10091403

SIMPLE SWITCHER® is a registered trademark of National Semiconductor Corporation.

© 2003 National Semiconductor Corporation

Connection Diagrams and Ordering Information

TO-263 Package
Top View

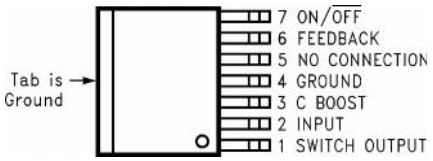

10091401

Order Number
LM2676S-3.3, LM2676S-5.0,
LM2676S-12 or LM2676S-ADJ
See NSC Package Number TS7B

TO-220 Package
Top View

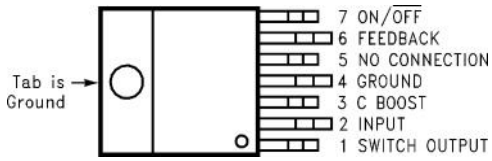

10091402

Order Number
LM2676T-3.3, LM2676T-5.0,
LM2676T-12 or LM2676T-ADJ
See NSC Package Number TA07B

Top View

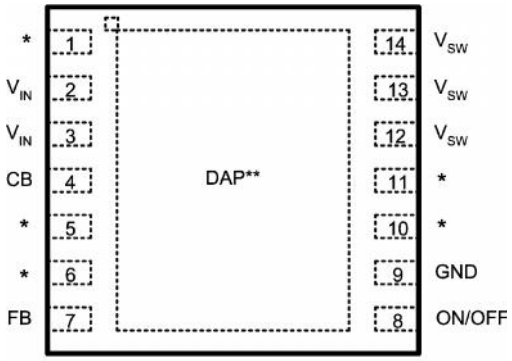

*No Connections

** Connect to Pin 9 on PCB

10091441

LLP-14
See NS package Number SRC14A

Ordering Information for LLP Package

Output Voltage	Order Information	Package Marking	Supplied As
12	LM2676SD-12	S0003LB	250 Units on Tape and Reel
12	LM2676SDX-12	S0003LB	2500 Units on Tape and Reel
3.3	LM2676SD-3.3	S0003NB	250 Units on Tape and Reel
3.3	LM2676SDX-3.3	S0003NB	2500 Units on Tape and Reel
5.0	LM2676SD-5.0	S0003PB	250 Units on Tape and Reel
5.0	LM2676SDX-5.0	S0003PB	2500 Units on Tape and Reel
ADJ	LM2676SD-ADJ	S0003RB	250 Units on Tape and Reel
ADJ	LM2676SDX-ADJ	S0003RB	2500 Units on Tape and Reel

Absolute Maximum Ratings (Note 1)

If Military/Aerospace specified devices are required, please contact the National Semiconductor Sales Office/ Distributors for availability and specifications.

Input Supply Voltage	45V
ON/OFF Pin Voltage	−0.1V to 6V
Switch Voltage to Ground	−1V to V_{IN}
Boost Pin Voltage	V_{SW} + 8V
Feedback Pin Voltage	−0.3V to 14V
Power Dissipation	Internally Limited
ESD (Note 2)	2 kV
Storage Temperature Range	−65˚C to 150˚C
Soldering Temperature	
Wave	4 sec, 260˚C
Infrared	10 sec, 240˚C
Vapor Phase	75 sec, 219˚C

Operating Ratings

Supply Voltage	8V to 40V
Junction Temperature Range (T_J)	−40˚C to 125˚C

Electrical Characteristics

Limits appearing in **bold type face** apply over the entire junction temperature range of operation, −40˚C to 125˚C. Specifications appearing in normal type apply for $T_A = T_J = 25$˚C.

LM2676-3.3

Symbol	Parameter	Conditions	Typical (Note 3)	Min (Note 4)	Max (Note 4)	Units
V_{OUT}	Output Voltage	V_{IN} = 8V to 40V, 100mA ≤ I_{OUT} ≤ 3A	3.3	3.234/**3.201**	3.366/**3.399**	V
η	Efficiency	V_{IN} = 12V, I_{LOAD} = 3A	86			%

LM2676-5.0

Symbol	Parameter	Conditions	Typical (Note 3)	Min (Note 4)	Max (Note 4)	Units
V_{OUT}	Output Voltage	V_{IN} = 8V to 40V, 100mA ≤ I_{OUT} ≤ 3A	5.0	4.900/**4.850**	5.100/**5.150**	V
η	Efficiency	V_{IN} = 12V, I_{LOAD} = 3A	88			%

LM2676-12

Symbol	Parameter	Conditions	Typical (Note 3)	Min (Note 4)	Max (Note 4)	Units
V_{OUT}	Output Voltage	V_{IN} = 15V to 40V, 100mA ≤ I_{OUT} ≤ 3A	12	11.76/**11.64**	12.24/**12.36**	V
η	Efficiency	V_{IN} = 24V, I_{LOAD} = 3A	94			%

LM2676-ADJ

Symbol	Parameter	Conditions	Typ (Note 3)	Min (Note 4)	Max (Note 4)	Units
V_{FB}	Feedback Voltage	V_{IN} = 8V to 40V, 100mA ≤ I_{OUT} ≤ 3A V_{OUT} Programmed for 5V	1.21	1.186/**1.174**	1.234/**1.246**	V
η	Efficiency	V_{IN} = 12V, I_{LOAD} = 3A	88			%

All Output Voltage Versions Electrical Characteristics

Limits appearing in **bold type face** apply over the entire junction temperature range of operation, –40˚C to 125˚C. Specifications appearing in normal type apply for $T_A = T_J = 25$˚C. Unless otherwise specified V_{IN}=12V for the 3.3V, 5V and Adjustable versions and V_{IN}=24V for the 12V version.

Symbol	Parameter	Conditions	Typ	Min	Max	Units
DEVICE PARAMETERS						
I_Q	Quiescent Current	$V_{FEEDBACK}$ = 8V For 3.3V, 5.0V, and ADJ Versions $V_{FEEDBACK}$ = 15V For 12V Versions	4.2		6	mA
I_{STBY}	Standby Quiescent Current	ON/OFF Pin = 0V	50		100/**150**	µA
I_{CL}	Current Limit		4.5	3.8/**3.6**	5.25/**5.4**	A
I_L	Output Leakage Current	V_{IN} = 40V, ON/OFF Pin = 0V V_{SWITCH} = 0V V_{SWITCH} = –1V	 16		 200 15	 µA mA
$R_{DS(ON)}$	Switch On-Resistance	I_{SWITCH} = 3A	0.15		0.17/**0.29**	Ω
f_O	Oscillator Frequency	Measured at Switch Pin	260	**225**	**280**	kHz
D	Duty Cycle	Maximum Duty Cycle Minimum Duty Cycle	91 0			% %
I_{BIAS}	Feedback Bias Current	$V_{FEEDBACK}$ = 1.3V ADJ Version Only	85			nA
$V_{ON/OFF}$	ON/OFF Threshold Voltage		1.4	**0.8**	**2.0**	V
$I_{ON/OFF}$	ON/OFF Input Current	ON/OFF Input = 0V	20		**45**	µA
θ_{JA}	Thermal Resistance	T Package, Junction to Ambient (Note 5)	65			
θ_{JA}		T Package, Junction to Ambient (Note 6)	45			
θ_{JC}		T Package, Junction to Case	2			
θ_{JA}		S Package, Junction to Ambient (Note 7)	56			˚C/W
θ_{JA}		S Package, Junction to Ambient (Note 8)	35			
θ_{JA}		S Package, Junction to Ambient (Note 9)	26			
θ_{JC}		S Package, Junction to Case	2			++
θ_{JA}		SD Package, Junction to Ambient (Note 10)	55			
θ_{JA}		SD Package, Junction to Ambient (Note 11)	29			˚C/W

All Output Voltage Versions Electrical Characteristics (Continued)

Note 1: Absolute Maximum Ratings are limits beyond which damage to the device may occur. Operating Ratings indicate conditions under which of the device is guaranteed. Operating Ratings do not imply guaranteed performance limits. For guaranteed performance limits and associated test condition, see the electrical Characteristics tables.

Note 2: ESD was applied using the human-body model, a 100pF capacitor discharged through a 1.5 kΩ resistor into each pin.

Note 3: Typical values are determined with $T_A = T_J = 25^\circ C$ and represent the most likely norm.

Note 4: All limits are guaranteed at room temperature (standard type face) and at **temperature extremes (bold type face)**. All room temperature limits are 100% tested during production with $T_A = T_J = 25^\circ C$. All limits at temperature extremes are guaranteed via correlation using standard standard Quality Control (SQC) methods. All limits are used to calculate Average Outgoing Quality Level (AOQL).

Note 5: Junction to ambient thermal resistance (no external heat sink) for the 7 lead TO-220 package mounted vertically, with ½ inch leads in a socket, or on a PC board with minimum copper area.

Note 6: Junction to ambient thermal resistance (no external heat sink) for the 7 lead TO-220 package mounted vertically, with ½ inch leads soldered to a PC board containing approximately 4 square inches of (1 oz.) copper area surrounding the leads.

Note 7: Junction to ambient thermal resistance for the 7 lead TO-263 mounted horizontally against a PC board area of 0.136 square inches (the same size as the TO-263 package) of 1 oz. (0.0014 in. thick) copper.

Note 8: Junction to ambient thermal resistance for the 7 lead TO-263 mounted horizontally against a PC board area of 0.4896 square inches (3.6 times the area of the TO-263 package) of 1 oz. (0.0014 in. thick) copper.

Note 9: Junction to ambient thermal resistance for the 7 lead TO-263 mounted horizontally against a PC board copper area of 1.0064 square inches (7.4 times the area of the TO-263 package) of 1 oz. (0.0014 in. thick) copper. Additional copper area will reduce thermal resistance further. See the thermal model in Switchers Made Simple® software.

Note 10: Junction to ambient thermal resistance for the 14-lead LLP mounted on a PC board copper area equal to the die attach paddle.

Note 11: Junction to ambient thermal resistance for the 14-lead LLP mounted on a PC board copper area using 12 vias to a second layer of copper equal to die attach paddle. Additional copper area will reduce thermal resistance further. For layout recommendations, refer to Application Note AN-1187.

Typical Performance Characteristics

Normalized Output Voltage

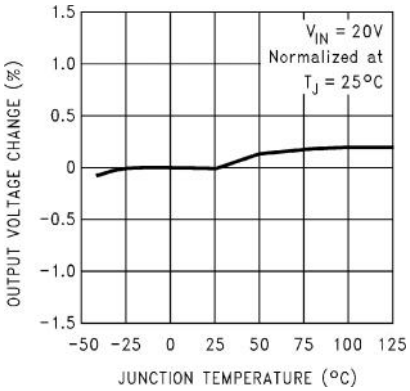

10091409

Line Regulation

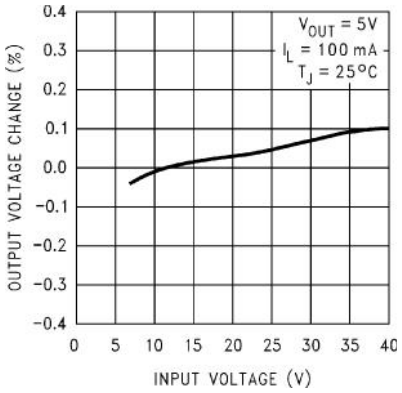

10091410

Efficiency vs Input Voltage

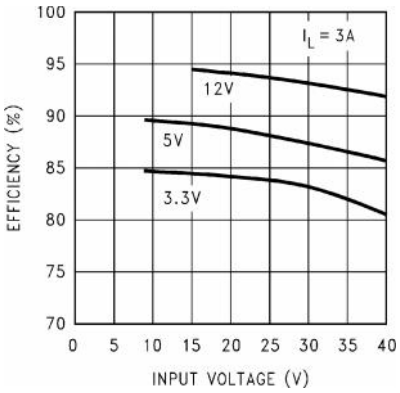

10091411

Efficiency vs I_{LOAD}

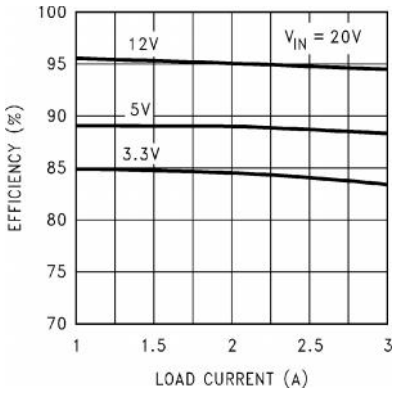

10091412

Switch Current Limit

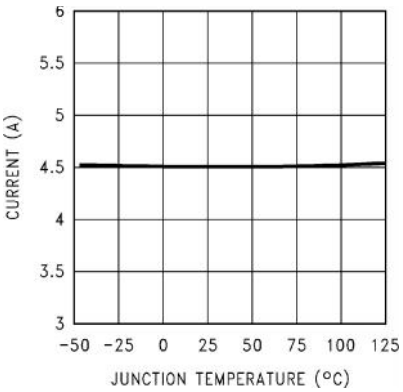

10091404

Operating Quiescent Current

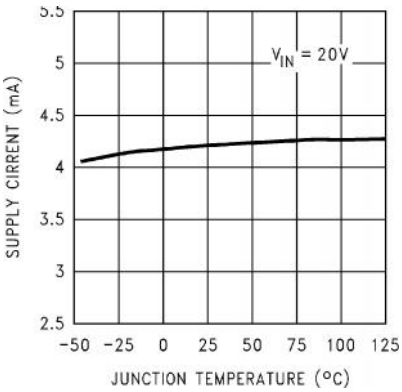

10091405

Typical Performance Characteristics (Continued)

Standby Quiescent Current

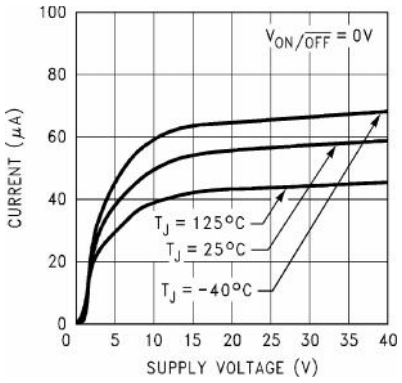

10091440

ON/OFF Threshold Voltage

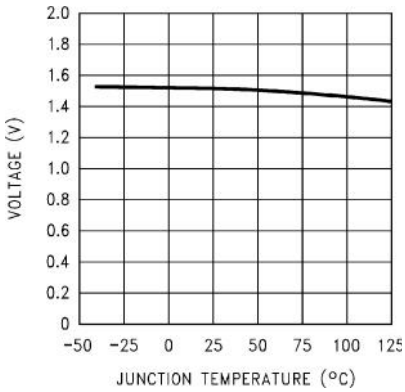

10091413

ON/OFF Pin Current (Sourcing)

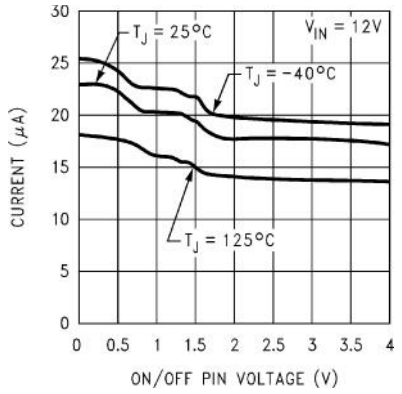

10091414

Switching Frequency

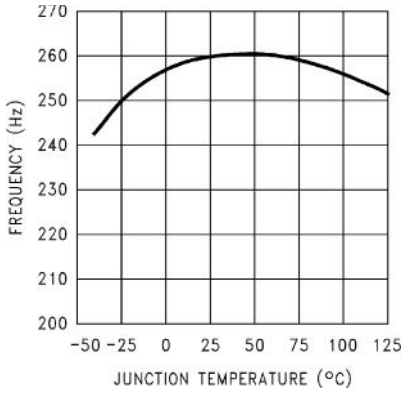

10091415

Feedback Pin Bias Current

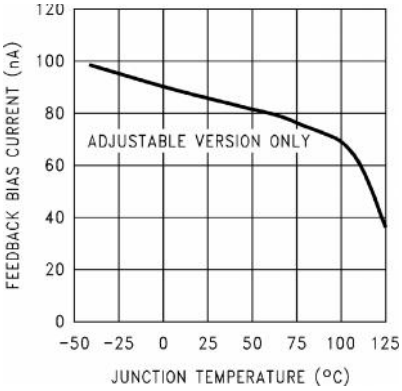

10091416

Typical Performance Characteristics

Continuous Mode Switching Waveforms
V_{IN} = 20V, V_{OUT} = 5V, I_{LOAD} = 3A
L = 33 µH, C_{OUT} = 200 µF, C_{OUT}ESR = 26 mΩ

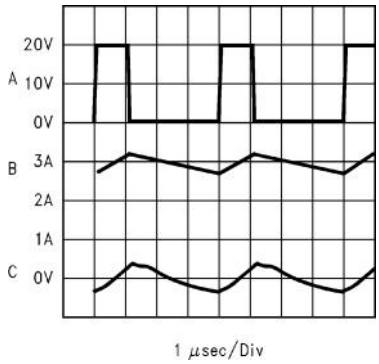

10091417

A: V_{SW} Pin Voltage, 10 V/div.
B: Inductor Current, 1 A/div
C: Output Ripple Voltage, 20 mV/div AC-Coupled

Horizontal Time Base: 1 µs/div

Discontinuous Mode Switching Waveforms
V_{IN} = 20V, V_{OUT} = 5V, I_{LOAD} = 500 mA
L = 10 µH, C_{OUT} = 400 µF, C_{OUT}ESR = 13 mΩ

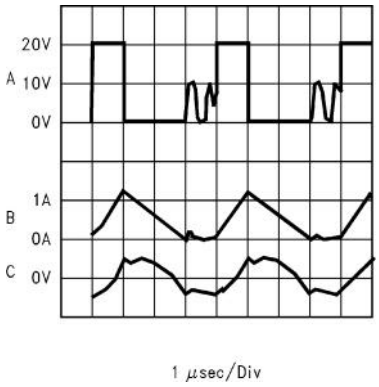

10091418

A: V_{SW} Pin Voltage, 10 V/div.
B: Inductor Current, 1 A/div
C: Output Ripple Voltage, 20 mV/div AC-Coupled

Horizontal Time Base: 1 µs//iv

Load Transient Response for Continuous Mode
V_{IN} = 20V, V_{OUT} = 5V
L = 33 µH, C_{OUT} = 200 µF, C_{OUT}ESR = 26 mΩ

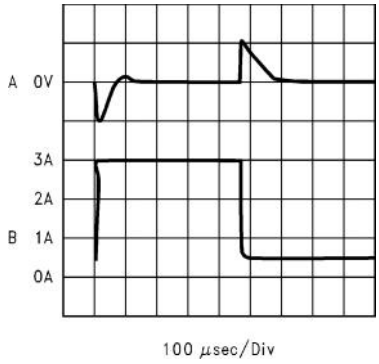

10091419

A: Output Voltage, 100 mV//div, AC-Coupled.
B: Load Current: 500 mA to 3A Load Pulse

Horizontal Time Base: 100 µs/div

Load Transient Response for Discontinuous Mode
V_{IN} = 20V, V_{OUT} = 5V,
L = 10 µH, C_{OUT} = 400 µF, C_{OUT}ESR = 13 mΩ

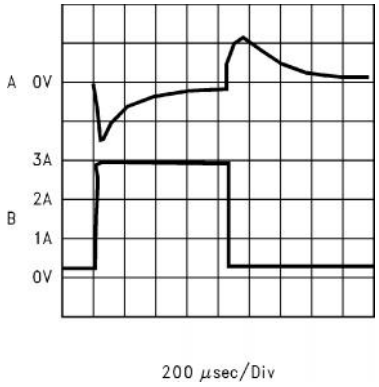

10091420

A: Output Voltage, 100 mV/div, AC-Coupled.
B: Load Current: 200 mA to 3A Load Pulse

Horizontal Time Base: 200 µs/div

Block Diagram

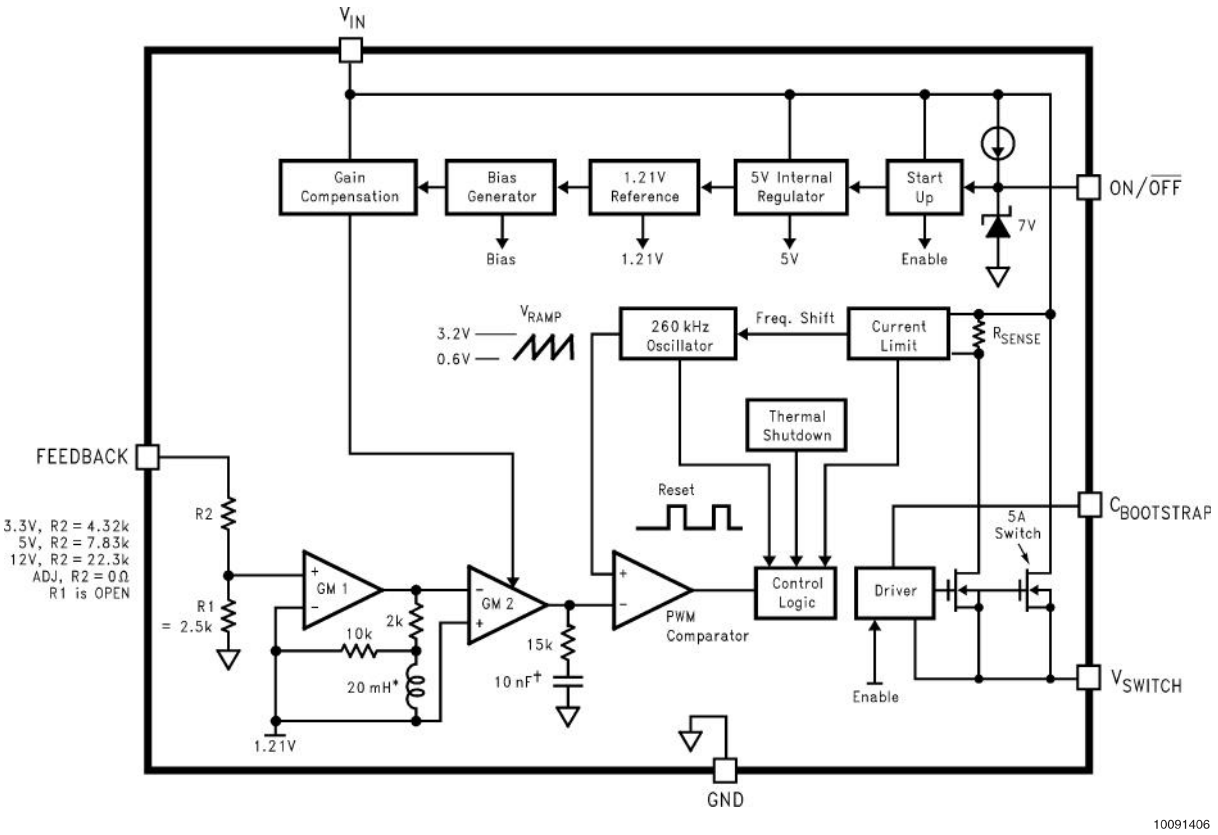

* Active Inductor Patent Number 5,514,947

† Active Capacitor Patent Number 5,382,918

Application Hints

The LM2676 provides all of the active functions required for a step-down (buck) switching regulator. The internal power switch is a DMOS power MOSFET to provide power supply designs with high current capability, up to 3A, and highly efficient operation.

The LM2676 is part of the ***SIMPLE SWITCHER*** family of power converters. A complete design uses a minimum number of external components, which have been predetermined from a variety of manufacturers. Using either this data sheet or a design software program called ***LM267X Made Simple*** (version 2.0) a complete switching power supply can be designed quickly. The software is provided free of charge and can be downloaded from National Semiconductor's Internet site located at http://www.national.com.

SWITCH OUTPUT

This is the output of a power MOSFET switch connected directly to the input voltage. The switch provides energy to an inductor, an output capacitor and the load circuitry under control of an internal pulse-width-modulator (PWM). The PWM controller is internally clocked by a fixed 260KHz oscillator. In a standard step-down application the duty cycle (Time ON/Time OFF) of the power switch is proportional to the ratio of the power supply output voltage to the input voltage. The voltage on pin 1 switches between Vin (switch ON) and below ground by the voltage drop of the external Schottky diode (switch OFF).

INPUT

The input voltage for the power supply is connected to pin 2. In addition to providing energy to the load the input voltage also provides bias for the internal circuitry of the LM2676. For guaranteed performance the input voltage must be in the range of 8V to 40V. For best performance of the power supply the input pin should always be bypassed with an input capacitor located close to pin 2.

C BOOST

A capacitor must be connected from pin 3 to the switch output, pin 1. This capacitor boosts the gate drive to the internal MOSFET above Vin to fully turn it ON. This minimizes conduction losses in the power switch to maintain high efficiency. The recommended value for C Boost is 0.01µF.

GROUND

This is the ground reference connection for all components in the power supply. In fast-switching, high-current applications such as those implemented with the LM2676, it is recommended that a broad ground plane be used to minimize signal coupling throughout the circuit

FEEDBACK

This is the input to a two-stage high gain amplifier, which drives the PWM controller. It is necessary to connect pin 6 to the actual output of the power supply to set the dc output voltage. For the fixed output devices (3.3V, 5V and 12V outputs), a direct wire connection to the output is all that is required as internal gain setting resistors are provided inside the LM2676. For the adjustable output version two external resistors are required to set the dc output voltage. For stable operation of the power supply it is important to prevent coupling of any inductor flux to the feedback input.

ON/OFF

This input provides an electrical ON/OFF control of the power supply. Connecting this pin to ground or to any voltage less than 0.8V will completely turn OFF the regulator. The current drain from the input supply when OFF is only 50µA. Pin 7 has an internal pull-up current source of approximately 20µA and a protection clamp zener diode of 7V to ground. When electrically driving the ON/OFF pin the high voltage level for the ON condition should not exceed the 6V absolute maximum limit. When ON/OFF control is not required pin 7 should be left open circuited.

DAP (LLP PACKAGE)

The Die Attach Pad (DAP) can and should be connected to PCB Ground plane/island. For CAD and assembly guidelines refer to Application Note AN-1187 at http://power.national.com.

Application Hints (Continued)

DESIGN CONSIDERATIONS

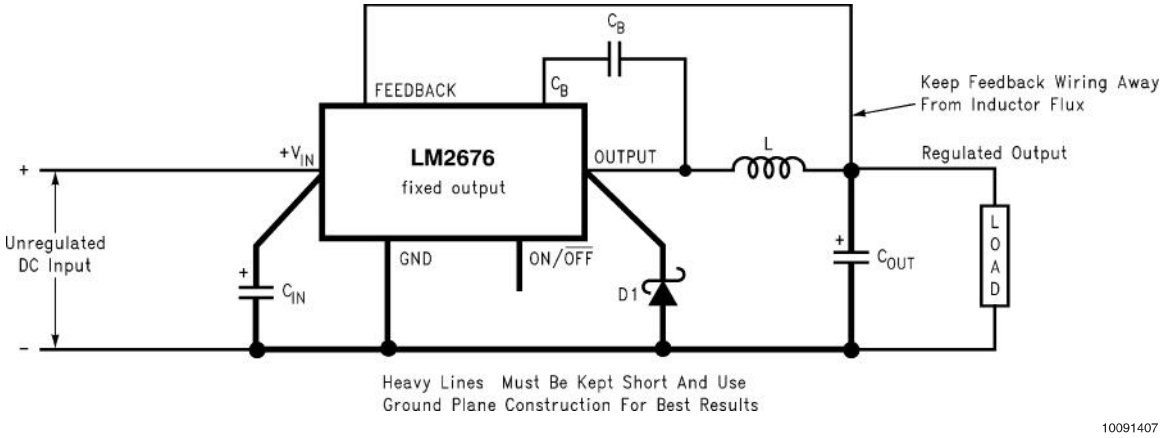

FIGURE 1. Basic circuit for fixed output voltage applications.

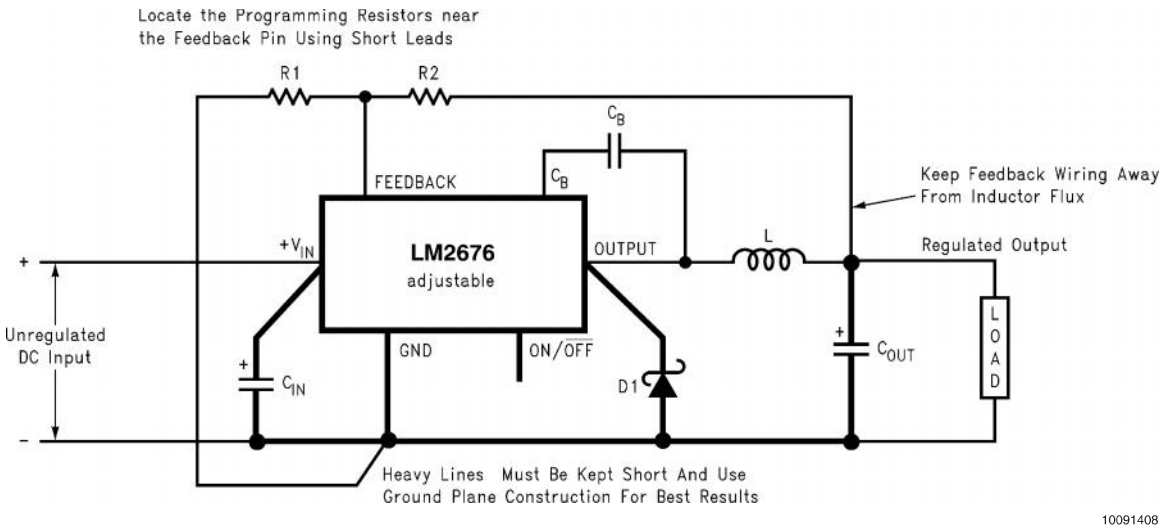

FIGURE 2. Basic circuit for adjustable output voltage applications

Power supply design using the LM2676 is greatly simplified by using recommended external components. A wide range of inductors, capacitors and Schottky diodes from several manufacturers have been evaluated for use in designs that cover the full range of capabilities (input voltage, output voltage and load current) of the LM2676. A simple design procedure using nomographs and component tables provided in this data sheet leads to a working design with very little effort. Alternatively, the design software, ***LM267X Made Simple*** (version 6.0), can also be used to provide instant component selection, circuit performance calculations for evaluation, a bill of materials component list and a circuit schematic.

The individual components from the various manufacturers called out for use are still just a small sample of the vast array of components available in the industry. While these components are recommended, they are not exclusively the only components for use in a design. After a close comparison of component specifications, equivalent devices from other manufacturers could be substituted for use in an application.

Important considerations for each external component and an explanation of how the nomographs and selection tables were developed follows.

INDUCTOR

The inductor is the key component in a switching regulator. For efficiency the inductor stores energy during the switch ON time and then transfers energy to the load while the switch is OFF.

Nomographs are used to select the inductance value required for a given set of operating conditions. The nomographs assume that the circuit is operating in continuous mode (the current flowing through the inductor never falls to zero). The magnitude of inductance is selected to maintain a

Application Hints (Continued)

maximum ripple current of 30% of the maximum load current. If the ripple current exceeds this 30% limit the next larger value is selected.

The inductors offered have been specifically manufactured to provide proper operation under all operating conditions of input and output voltage and load current. Several part types are offered for a given amount of inductance. Both surface mount and through-hole devices are available. The inductors from each of the three manufacturers have unique characteristics.

Renco: ferrite stick core inductors; benefits are typically lowest cost and can withstand ripple and transient peak currents above the rated value. These inductors have an external magnetic field, which may generate EMI.

Pulse Engineering: powdered iron toroid core inductors; these also can withstand higher than rated currents and, being toroid inductors, will have low EMI.

Coilcraft: ferrite drum core inductors; these are the smallest physical size inductors and are available only as surface mount components. These inductors also generate EMI but less than stick inductors.

OUTPUT CAPACITOR

The output capacitor acts to smooth the dc output voltage and also provides energy storage. Selection of an output capacitor, with an associated equivalent series resistance (ESR), impacts both the amount of output ripple voltage and stability of the control loop.

The output ripple voltage of the power supply is the product of the capacitor ESR and the inductor ripple current. The capacitor types recommended in the tables were selected for having low ESR ratings.

In addition, both surface mount tantalum capacitors and through-hole aluminum electrolytic capacitors are offered as solutions.

Impacting frequency stability of the overall control loop, the output capacitance, in conjunction with the inductor, creates a double pole inside the feedback loop. In addition the capacitance and the ESR value create a zero. These frequency response effects together with the internal frequency compensation circuitry of the LM2676 modify the gain and phase shift of the closed loop system.

As a general rule for stable switching regulator circuits it is desired to have the unity gain bandwidth of the circuit to be limited to no more than one-sixth of the controller switching frequency. With the fixed 260KHz switching frequency of the LM2676, the output capacitor is selected to provide a unity gain bandwidth of 40KHz maximum. Each recommended capacitor value has been chosen to achieve this result.

In some cases multiple capacitors are required either to reduce the ESR of the output capacitor, to minimize output ripple (a ripple voltage of 1% of Vout or less is the assumed performance condition), or to increase the output capacitance to reduce the closed loop unity gain bandwidth (to less than 40KHz). When parallel combinations of capacitors are required it has been assumed that each capacitor is the exact same part type.

The RMS current and working voltage (WV) ratings of the output capacitor are also important considerations. In a typical step-down switching regulator, the inductor ripple current (set to be no more than 30% of the maximum load current by the inductor selection) is the current that flows through the output capacitor. The capacitor RMS current rating must be greater than this ripple current. The voltage rating of the output capacitor should be greater than 1.3 times the maximum output voltage of the power supply. If operation of the system at elevated temperatures is required, the capacitor voltage rating may be de-rated to less than the nominal room temperature rating. Careful inspection of the manufacturer's specification for de-rating of working voltage with temperature is important.

INPUT CAPACITOR

Fast changing currents in high current switching regulators place a significant dynamic load on the unregulated power source. An input capacitor helps to provide additional current to the power supply as well as smooth out input voltage variations.

Like the output capacitor, the key specifications for the input capacitor are RMS current rating and working voltage. The RMS current flowing through the input capacitor is equal to one-half of the maximum dc load current so the capacitor should be rated to handle this. Paralleling multiple capacitors proportionally increases the current rating of the total capacitance. The voltage rating should also be selected to be 1.3 times the maximum input voltage. Depending on the unregulated input power source, under light load conditions the maximum input voltage could be significantly higher than normal operation and should be considered when selecting an input capacitor.

The input capacitor should be placed very close to the input pin of the LM2676. Due to relative high current operation with fast transient changes, the series inductance of input connecting wires or PCB traces can create ringing signals at the input terminal which could possibly propagate to the output or other parts of the circuitry. It may be necessary in some designs to add a small valued (0.1µF to 0.47µF) ceramic type capacitor in parallel with the input capacitor to prevent or minimize any ringing.

CATCH DIODE

When the power switch in the LM2676 turns OFF, the current through the inductor continues to flow. The path for this current is through the diode connected between the switch output and ground. This forward biased diode clamps the switch output to a voltage less than ground. This negative voltage must be greater than –1V so a low voltage drop (particularly at high current levels) Schottky diode is recommended. Total efficiency of the entire power supply is significantly impacted by the power lost in the output catch diode. The average current through the catch diode is dependent on the switch duty cycle (D) and is equal to the load current times (1-D). Use of a diode rated for much higher current than is required by the actual application helps to minimize the voltage drop and power loss in the diode.

During the switch ON time the diode will be reversed biased by the input voltage. The reverse voltage rating of the diode should be at least 1.3 times greater than the maximum input voltage.

BOOST CAPACITOR

The boost capacitor creates a voltage used to overdrive the gate of the internal power MOSFET. This improves efficiency by minimizing the on resistance of the switch and associated power loss. For all applications it is recommended to use a 0.01µF/50V ceramic capacitor.

Application Hints (Continued)

ADDITIONAL APPLICATON INFORMATION

When the output voltage is greater than approximately 6V, and the duty cycle at minimum input voltage is greater than approximately 50%, the designer should exercise caution in selection of the output filter components. When an application designed to these specific operating conditions is subjected to a current limit fault condition, it may be possible to observe a large hysteresis in the current limit. This can affect the output voltage of the device until the load current is reduced sufficiently to allow the current limit protection circuit to reset itself.

Under current limiting conditions, the LM267x is designed to respond in the following manner:

1. At the moment when the inductor current reaches the current limit threshold, the ON-pulse is immediately terminated. This happens for any application condition.
2. However, the current limit block is also designed to momentarily reduce the duty cycle to below 50% to avoid subharmonic oscillations, which could cause the inductor to saturate.
3. Thereafter, once the inductor current falls below the current limit threshold, there is a small relaxation time during which the duty cycle progressively rises back above 50% to the value required to achieve regulation.

If the output capacitance is sufficiently 'large', it may be possible that as the output tries to recover, the output capacitor charging current is large enough to repeatedly retrigger the current limit circuit before the output has fully settled. This condition is exacerbated with higher output voltage settings because the energy requirement of the output capacitor varies as the square of the output voltage ($\frac{1}{2}CV^2$), thus requiring an increased charging current.

A simple test to determine if this condition might exist for a suspect application is to apply a short circuit across the output of the converter, and then remove the shorted output condition. In an application with properly selected external components, the output will recover smoothly.

Practical values of external components that have been experimentally found to work well under these specific operating conditions are C_{OUT} = 47µF, L = 22µH. It should be noted that even with these components, for a device's current limit of I_{CLIM}, the maximum load current under which the possibility of the large current limit hysteresis can be minimized is $I_{CLIM}/2$. For example, if the input is 24V and the set output voltage is 18V, then for a desired maximum current of 1.5A, the current limit of the chosen switcher must be confirmed to be at least 3A.

SIMPLE DESIGN PROCEDURE

Using the nomographs and tables in this data sheet (or use the available design software at http://www.national.com) a complete step-down regulator can be designed in a few simple steps.

Step 1: Define the power supply operating conditions:

Required output voltage

Maximum DC input voltage

Maximum output load current

Step 2: Set the output voltage by selecting a fixed output LM2676 (3.3V, 5V or 12V applications) or determine the required feedback resistors for use with the adjustable LM2676–ADJ

Step 3: Determine the inductor required by using one of the four nomographs, *Figure 3* through *Figure 6*. Table 1 provides a specific manufacturer and part number for the inductor.

Step 4: Using Table 3 (fixed output voltage) or Table 6 (adjustable output voltage), determine the output capacitance required for stable operation. Table 2 provides the specific capacitor type from the manufacturer of choice.

Step 5: Determine an input capacitor from Table 4 for fixed output voltage applications. Use Table 2 to find the specific capacitor type. For adjustable output circuits select a capacitor from Table 2 with a sufficient working voltage (WV) rating greater than Vin max, and an rms current rating greater than one-half the maximum load current (2 or more capacitors in parallel may be required).

Step 6: Select a diode from Table 5. The current rating of the diode must be greater than I load max and the Reverse Voltage rating must be greater than Vin max.

Step 7: Include a 0.01µF/50V capacitor for Cboost in the design.

FIXED OUTPUT VOLTAGE DESIGN EXAMPLE

A system logic power supply bus of 3.3V is to be generated from a wall adapter which provides an unregulated DC voltage of 13V to 16V. The maximum load current is 2.5A. Through-hole components are preferred.

Step 1: Operating conditions are:

Vout = 3.3V

Vin max = 16V

Iload max = 2.5A

Step 2: Select an LM2676T-3.3. The output voltage will have a tolerance of

±2% at room temperature and ±3% over the full operating temperature range.

Step 3: Use the nomograph for the 3.3V device ,*Figure 3*. The intersection of the 16V horizontal line (V_{in} max) and the 2.5A vertical line (I_{load} max) indicates that L33, a 22µH inductor, is required.

From Table 1, L33 in a through-hole component is available from Renco with part number RL-1283-22-43 or part number PE-53933 from Pulse Engineering.

Step 4: Use Table 3 to determine an output capacitor. With a 3.3V output and a 22µH inductor there are four through-hole output capacitor solutions with the number of same type capacitors to be paralleled and an identifying capacitor code given. Table 2 provides the actual capacitor characteristics. Any of the following choices will work in the circuit:

1 x 220µF/10V Sanyo OS-CON (code C5)

1 x 1000µF/35V Sanyo MV-GX (code C10)

1 x 2200µF/10V Nichicon PL (code C5)

1 x 1000µF/35V Panasonic HFQ (code C7)

Step 5: Use Table 4 to select an input capacitor. With 3.3V output and 22µH there are three through-hole solutions. These capacitors provide a sufficient voltage rating and an rms current rating greater than 1.25A (1/2 I_{load} max). Again using Table 2 for specific component characteristics the following choices are suitable:

1 x 1000µF/63V Sanyo MV-GX (code C14)

1 x 820µF/63V Nichicon PL (code C24)

1 x 560µF/50V Panasonic HFQ (code C13)

Application Hints (Continued)

Step 6: From Table 5 a 3A Schottky diode must be selected. For through-hole components 20V rated diodes are sufficient and 2 part types are suitable:

1N5820

SR302

Step 7: A 0.01µF capacitor will be used for Cboost.

ADJUSTABLE OUTPUT DESIGN EXAMPLE

In this example it is desired to convert the voltage from a two battery automotive power supply (voltage range of 20V to 28V, typical in large truck applications) to the 14.8VDC alternator supply typically used to power electronic equipment from single battery 12V vehicle systems. The load current required is 2A maximum. It is also desired to implement the power supply with all surface mount components.

Step 1: Operating conditions are:

Vout = 14.8V

Vin max = 28V

Iload max = 2A

Step 2: Select an LM2676S-ADJ. To set the output voltage to 14.9V two resistors need to be chosen (R1 and R2 in *Figure 2*). For the adjustable device the output voltage is set by the following relationship:

$$V_{OUT} = V_{FB}\left(1 + \frac{R_2}{R_1}\right)$$

Where V_{FB} is the feedback voltage of typically 1.21V.

A recommended value to use for R1 is 1K. In this example then R2 is determined to be:

$$R_2 = R_1\left(\frac{V_{OUT}}{V_{FB}} - 1\right) = 1\,k\Omega\left(\frac{14.8V}{1.21V} - 1\right)$$

R2 = 11.23KΩ

The closest standard 1% tolerance value to use is 11.3KΩ

This will set the nominal output voltage to 14.88V which is within 0.5% of the target value.

Step 3: To use the nomograph for the adjustable device, *Figure 6*, requires a calculation of the inductor Volt•microsecond constant (E•T expressed in V•µS) from the following formula:

$$E \cdot T = (V_{IN(MAX)} - V_{OUT} - V_{SAT}) \cdot \frac{V_{OUT} + V_D}{V_{IN(MAX)} - V_{SAT} + V_D} \cdot \frac{1000}{260}\ (V \cdot \mu s)$$

where V_{SAT} is the voltage drop across the internal power switch which is $R_{ds(ON)}$ times I_{load}. In this example this would be typically 0.15Ω x 2A or 0.3V and V_D is the voltage drop across the forward bisased Schottky diode, typically 0.5V. The switching frequency of 260KHz is the nominal value to use to estimate the ON time of the switch during which energy is stored in the inductor.

For this example E•T is found to be:

$$E \cdot T = (28 - 14.8 - 0.3) \cdot \frac{14.8 + 0.5}{28 - 0.3 + 0.5} \cdot \frac{1000}{260}\ (V \cdot \mu s)$$

$$E \cdot T = (12.9V) \cdot \frac{15.3}{28.2} \cdot 3.85\ (V \cdot \mu s) = 26.9\ (V \cdot \mu s)$$

Using *Figure 6*, the intersection of 27V•µS horizontally and the 2A vertical line (I_{load} max) indicates that L38 , a 68µH inductor, should be used.

From Table 1, L38 in a surface mount component is available from Pulse Engineering with part number PE-54038S.

Step 4: Use Table 6 to determine an output capacitor. With a 14.8V output the 12.5 to 15V row is used and with a 68µH inductor there are three surface mount output capacitor solutions. Table 2 provides the actual capacitor characteristics based on the C Code number. Any of the following choices can be used:

1 x 33µF/20V AVX TPS (code C6)

1 x 47µF/20V Sprague 594 (code C8)

1 x 47µF/20V Kemet T495 (code C8)

Important Note: When using the adjustable device in low voltage applications (less than 3V output), if the nomograph, Figure 6, selects an inductance of 22µH or less, Table 6 does not provide an output capacitor solution. With these conditions the number of output capacitors required for stable operation becomes impractical. It is recommended to use either a 33µH or 47µH inductor and the output capacitors from Table 6.

Step 5: An input capacitor for this example will require at least a 35V WV rating with an rms current rating of 1A (1/2 Iout max). From Table 2 it can be seen that C12, a 33µF/35V capacitor from Sprague, has the required voltage/current rating of the surface mount components.

Step 6: From Table 5 a 3A Schottky diode must be selected. For surface mount diodes with a margin of safety on the voltage rating one of five diodes can be used:

SK34

30BQ040

30WQ04F

MBRS340

MBRD340

Step 7: A 0.01µF capacitor will be used for Cboost.

LLP PACKAGE DEVICES

The LM2676 is offered in the 14 lead LLP surface mount package to allow for a significantly decreased footprint with equivalent power dissipation compared to the TO-263. For details on mounting and soldering specifications, refer to Application Note AN-1187.

Inductor Selection Guides For Continuous Mode Operation

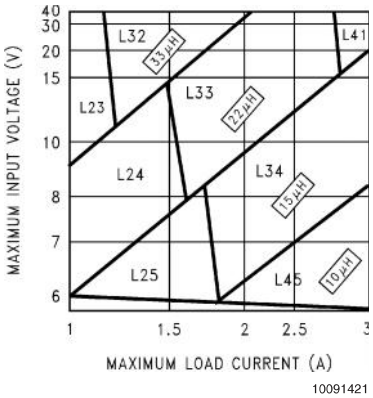

FIGURE 3. LM2676-3.3

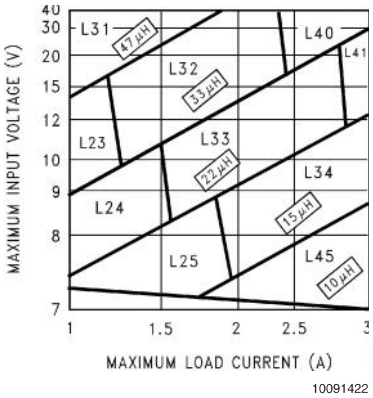

FIGURE 4. LM2676-5.0

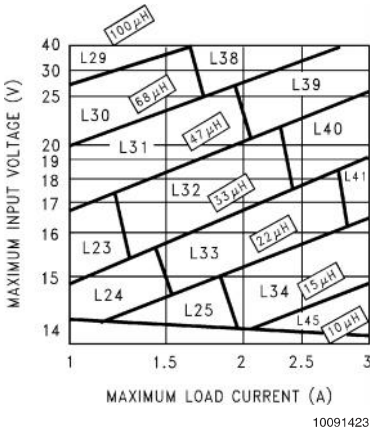

FIGURE 5. LM2676-12

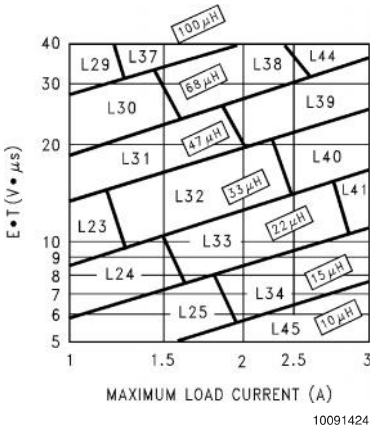

FIGURE 6. LM2676-ADJ

Inductor Selection Guides For Continuous Mode Operation (Continued)

Table 1. Inductor Manufacturer Part Numbers

Inductor Reference Number	Inductance (µH)	Current (A)	Renco		Pulse Engineering		Coilcraft
			Through Hole	Surface Mount	Through Hole	Surface Mount	Surface Mount
L23	33	1.35	RL-5471-7	RL1500-33	PE-53823	PE-53823S	DO3316-333
L24	22	1.65	RL-1283-22-43	RL1500-22	PE-53824	PE-53824S	DO3316-223
L25	15	2.00	RL-1283-15-43	RL1500-15	PE-53825	PE-53825S	DO3316-153
L29	100	1.41	RL-5471-4	RL-6050-100	PE-53829	PE-53829S	DO5022P-104
L30	68	1.71	RL-5471-5	RL6050-68	PE-53830	PE-53830S	DO5022P-683
L31	47	2.06	RL-5471-6	RL6050-47	PE-53831	PE-53831S	DO5022P-473
L32	33	2.46	RL-5471-7	RL6050-33	PE-53932	PE-53932S	DO5022P-333
L33	22	3.02	RL-1283-22-43	RL6050-22	PE-53933	PE-53933S	DO5022P-223
L34	15	3.65	RL-1283-15-43	—	PE-53934	PE-53934S	DO5022P-153
L38	68	2.97	RL-5472-2	—	PE-54038	PE-54038S	—
L39	47	3.57	RL-5472-3	—	PE-54039	PE-54039S	—
L40	33	4.26	RL-1283-33-43	—	PE-54040	PE-54040S	—
L41	22	5.22	RL-1283-22-43	—	PE-54041	P0841	—
L44	68	3.45	RL-5473-3	—	PE-54044	—	—
L45	10	4.47	RL-1283-10-43	—	—	P0845	DO5022P-103HC

Inductor Manufacturer Contact Numbers

Coilcraft	Phone	(800) 322-2645
	FAX	(708) 639-1469
Coilcraft, Europe	Phone	+44 1236 730 595
	FAX	+44 1236 730 627
Pulse Engineering	Phone	(619) 674-8100
	FAX	(619) 674-8262
Pulse Engineering, Europe	Phone	+353 93 24 107
	FAX	+353 93 24 459
Renco Electronics	Phone	(800) 645-5828
	FAX	(516) 586-5562

Capacitor Selection Guides

Table 2. Input and Output Capacitor Codes

Capacitor Reference Code	Surface Mount								
	AVX TPS Series			Sprague 594D Series			Kemet T495 Series		
	C (µF)	WV (V)	Irms (A)	C (µF)	WV (V)	Irms (A)	C (µF)	WV (V)	Irms (A)
C1	330	6.3	1.15	120	6.3	1.1	100	6.3	0.82
C2	100	10	1.1	220	6.3	1.4	220	6.3	1.1
C3	220	10	1.15	68	10	1.05	330	6.3	1.1
C4	47	16	0.89	150	10	1.35	100	10	1.1
C5	100	16	1.15	47	16	1	150	10	1.1
C6	33	20	0.77	100	16	1.3	220	10	1.1
C7	68	20	0.94	180	16	1.95	33	20	0.78
C8	22	25	0.77	47	20	1.15	47	20	0.94
C9	10	35	0.63	33	25	1.05	68	20	0.94
C10	22	35	0.66	68	25	1.6	10	35	0.63
C11				15	35	0.75	22	35	0.63
C12				33	35	1	4.7	50	0.66
C13				15	50	0.9			

Table 2. Input and Output Capacitor Codes (continued)

Capacitor Reference Code	Through Hole											
	Sanyo OS-CON SA Series			Sanyo MV-GX Series			Nichicon PL Series			Panasonic HFQ Series		
	C (µF)	WV (V)	Irms (A)	C (µF)	WV (V)	Irms (A)	C (µF)	WV (V)	Irms (A)	C (µF)	WV (V)	Irms (A)
C1	47	6.3	1	1000	6.3	0.8	680	10	0.8	82	35	0.4
C2	150	6.3	1.95	270	16	0.6	820	10	0.98	120	35	0.44
C3	330	6.3	2.45	470	16	0.75	1000	10	1.06	220	35	0.76
C4	100	10	1.87	560	16	0.95	1200	10	1.28	330	35	1.01
C5	220	10	2.36	820	16	1.25	2200	10	1.71	560	35	1.4
C6	33	16	0.96	1000	16	1.3	3300	10	2.18	820	35	1.62
C7	100	16	1.92	150	35	0.65	3900	10	2.36	1000	35	1.73
C8	150	16	2.28	470	35	1.3	6800	10	2.68	2200	35	2.8
C9	100	20	2.25	680	35	1.4	180	16	0.41	56	50	0.36
C10	47	25	2.09	1000	35	1.7	270	16	0.55	100	50	0.5
C11				220	63	0.76	470	16	0.77	220	50	0.92
C12				470	63	1.2	680	16	1.02	470	50	1.44
C13				680	63	1.5	820	16	1.22	560	50	1.68
C14				1000	63	1.75	1800	16	1.88	1200	50	2.22
C15							220	25	0.63	330	63	1.42
C16							220	35	0.79	1500	63	2.51
C17							560	35	1.43			
C18							2200	35	2.68			
C19							150	50	0.82			
C20							220	50	1.04			
C21							330	50	1.3			
C22							100	63	0.75			
C23							390	63	1.62			
C24							820	63	2.22			
C25							1200	63	2.51			

Capacitor Selection Guides (Continued)

Capacitor Manufacturer Contact Numbers

Nichicon	Phone	(847) 843-7500
	FAX	(847) 843-2798
Panasonic	Phone	(714) 373-7857
	FAX	(714) 373-7102
AVX	Phone	(845) 448-9411
	FAX	(845) 448-1943
Sprague/Vishay	Phone	(207) 324-4140
	FAX	(207) 324-7223
Sanyo	Phone	(619) 661-6322
	FAX	(619) 661-1055
Kemet	Phone	(864) 963-6300
	FAX	(864) 963-6521

Table 3. Output Capacitors for Fixed Output Voltage Application

Output Voltage (V)	Inductance (µH)	Surface Mount					
		AVX TPS Series		Sprague 594D Series		Kemet T495 Series	
		No.	C Code	No.	C Code	No.	C Code
3.3	10	4	C2	3	C1	4	C4
	15	4	C2	3	C1	4	C4
	22	3	C2	2	C7	3	C4
	33	2	C2	2	C6	2	C4
5	10	4	C2	4	C6	4	C4
	15	3	C2	2	C7	3	C4
	22	3	C2	2	C7	3	C4
	33	2	C2	2	C3	2	C4
	47	2	C2	1	C7	2	C4
12	10	4	C5	3	C6	5	C9
	15	3	C5	2	C7	4	C8
	22	2	C5	2	C6	3	C8
	33	2	C5	1	C7	2	C8
	47	2	C4	1	C6	2	C8
	68	1	C5	1	C5	2	C7
	100	1	C4	1	C5	1	C8

Output Voltage (V)	Inductance (µH)	Through Hole							
		Sanyo OS-CON SA Series		Sanyo MV-GX Series		Nichicon PL Series		Panasonic HFQ Series	
		No.	C Code	No.	C Code	No.	C Code	No.	C Code
3.3	10	1	C3	1	C10	1	C6	2	C6
	15	1	C3	1	C10	1	C6	2	C5
	22	1	C5	1	C10	1	C5	1	C7
	33	1	C2	1	C10	1	C13	1	C5
5	10	2	C4	1	C10	1	C6	2	C5
	15	1	C5	1	C10	1	C5	1	C6
	22	1	C5	1	C5	1	C5	1	C5
	33	1	C4	1	C5	1	C13	1	C5
	47	1	C4	1	C4	1	C13	2	C3

Capacitor Selection Guides (Continued)

Output Voltage (V)	Inductance (µH)	Through Hole							
		Sanyo OS-CON SA Series		Sanyo MV-GX Series		Nichicon PL Series		Panasonic HFQ Series	
		No.	C Code	No.	C Code	No.	C Code	No.	C Code
12	10	2	C7	1	C5	1	C18	2	C5
	15	1	C8	1	C5	1	C17	1	C5
	22	1	C7	1	C5	1	C13	1	C5
	33	1	C7	1	C3	1	C11	1	C4
	47	1	C7	1	C3	1	C10	1	C3
	68	1	C7	1	C2	1	C10	1	C3
	100	1	C7	1	C2	1	C9	1	C1

No. represents the number of identical capacitor types to be connected in parallel
C Code indicates the Capacitor Reference number in Table 2 for identifying the specific component from the manufacturer.

Table 4. Input Capacitors for Fixed Output Voltage Application
(Assumes worst case maximum input voltage and load current for a given inductance value)

Output Voltage (V)	Inductance (µH)	Surface Mount					
		AVX TPS Series		Sprague 594D Series		Kemet T495 Series	
		No.	C Code	No.	C Code	No.	C Code
3.3	10	2	C5	1	C7	2	C8
	15	3	C9	1	C10	3	C10
	22	*	*	2	C13	3	C12
	33	*	*	2	C13	2	C12
5	10	2	C5	1	C7	2	C8
	15	2	C5	1	C7	2	C8
	22	3	C10	2	C12	3	C11
	33	*	*	2	C13	3	C12
	47	*	*	1	C13	2	C12
12	10	2	C7	2	C10	2	C7
	15	2	C7	2	C10	2	C7
	22	3	C10	2	C12	3	C10
	33	3	C10	2	C12	3	C10
	47	*	*	2	C13	3	C12
	68	*	*	2	C13	2	C12
	100	*	*	1	C13	2	C12

Output Voltage (V)	Inductance (µH)	Through Hole							
		Sanyo OS-CON SA Series		Sanyo MV-GX Series		Nichicon PL Series		Panasonic HFQ Series	
		No.	C Code	No.	C Code	No.	C Code	No.	C Code
3.3	10	1	C7	2	C4	1	C5	1	C6
	15	1	C10	1	C10	1	C18	1	C6
	22	*	*	1	C14	1	C24	1	C13
	33	*	*	1	C12	1	C20	1	C12
5	10	1	C7	2	C4	1	C14	1	C6
	15	1	C7	2	C4	1	C14	1	C6
	22	*	*	1	C10	1	C18	1	C13
	33	*	*	1	C14	1	C23	1	C13
	47	*	*	1	C12	1	C20	1	C12

Capacitor Selection Guides (Continued)

Output Voltage (V)	Inductance (µH)	Through Hole							
		Sanyo OS-CON SA Series		Sanyo MV-GX Series		Nichicon PL Series		Panasonic HFQ Series	
		No.	C Code	No.	C Code	No.	C Code	No.	C Code
12	10	1	C9	1	C10	1	C18	1	C6
	15	1	C10	1	C10	1	C18	1	C6
	22	1	C10	1	C10	1	C18	1	C6
	33	*	*	1	C10	1	C18	1	C6
	47	*	*	1	C13	1	C23	1	C13
	68	*	*	1	C12	1	C21	1	C12
	100	*	*	1	C11	1	C22	1	C11

* Check voltage rating of capacitors to be greater than application input voltage.
No. represents the number of identical capacitor types to be connected in parallel
C Code indicates the Capacitor Reference number in Table 2 for identifying the specific component from the manufacturer.

Table 5. Schottky Diode Selection Table

Reverse Voltage (V)	Surface Mount		Through Hole	
	3A	5A or More	3A	5A or More
20V	SK32		1N5820 SR302	
30V	SK33 30WQ03F	MBRD835L	1N5821 31DQ03	
40V	SK34 30BQ040 30WQ04F MBRS340 MBRD340	MBRB1545CT 6TQ045S	1N5822 MBR340 31DQ04 SR403	MBR745 80SQ045 6TQ045
50V or More	SK35 30WQ05F		MBR350 31DQ05 SR305	

Diode Manufacturer Contact Numbers

International Rectifier	Phone	(310) 322-3331
	FAX	(310) 322-3332
Motorola	Phone	(800) 521-6274
	FAX	(602) 244-6609
General Semiconductor	Phone	(516) 847-3000
	FAX	(516) 847-3236
Diodes, Inc.	Phone	(805) 446-4800
	FAX	(805) 446-4850

Table 6. Output Capacitors for Adjustable Output Voltage Applications

Output Voltage (V)	Inductance (µH)	Surface Mount					
		AVX TPS Series		Sprague 594D Series		Kemet T495 Series	
		No.	C Code	No.	C Code	No.	C Code
1.21 to 2.50	33*	7	C1	6	C2	7	C3
	47*	5	C1	4	C2	5	C3

Capacitor Selection Guides (Continued)

Table 6. Output Capacitors for Adjustable Output Voltage Applications (Continued)

Output Voltage (V)	Inductance (μH)	Surface Mount					
		AVX TPS Series		Sprague 594D Series		Kemet T495 Series	
		No.	C Code	No.	C Code	No.	C Code
2.5 to 3.75	33*	4	C1	3	C2	4	C3
	47*	3	C1	2	C2	3	C3
3.75 to 5	22	4	C1	3	C2	4	C3
	33	3	C1	2	C2	3	C3
	47	2	C1	2	C2	2	C3
5 to 6.25	22	3	C2	3	C3	3	C4
	33	2	C2	2	C3	2	C4
	47	2	C2	2	C3	2	C4
	68	1	C2	1	C3	1	C4
6.25 to 7.5	22	3	C2	1	C4	3	C4
	33	2	C2	1	C3	2	C4
	47	1	C3	1	C4	1	C6
	68	1	C2	1	C3	1	C4
7.5 to 10	33	2	C5	1	C6	2	C8
	47	1	C5	1	C6	2	C8
	68	1	C5	1	C6	1	C8
	100	1	C4	1	C5	1	C8
10 to 12.5	33	1	C5	1	C6	2	C8
	47	1	C5	1	C6	2	C8
	68	1	C5	1	C6	1	C8
	100	1	C5	1	C6	1	C8
12.5 to 15	33	1	C6	1	C8	1	C8
	47	1	C6	1	C8	1	C8
	68	1	C6	1	C8	1	C8
	100	1	C6	1	C8	1	C8
15 to 20	33	1	C8	1	C10	2	C10
	47	1	C8	1	C9	2	C10
	68	1	C8	1	C9	2	C10
	100	1	C8	1	C9	1	C10
20 to 30	33	2	C9	2	C11	2	C11
	47	1	C10	1	C12	1	C11
	68	1	C9	1	C12	1	C11
	100	1	C9	1	C12	1	C11
30 to 37	10	No Values Available		4	C13	8	C12
	15			3	C13	5	C12
	22			2	C13	4	C12
	33			1	C13	3	C12
	47			1	C13	2	C12
	68			1	C13	2	C12

Capacitor Selection Guides (Continued)

Table 6. Output Capacitors for Adjustable Output Voltage Applications (continued)

Output Voltage (V)	Inductance (µH)	Through Hole							
		Sanyo OS-CON SA Series		Sanyo MV-GX Series		Nichicon PL Series		Panasonic HFQ Series	
		No.	C Code	No.	C Code	No.	C Code	No.	C Code
1.21 to 2.50	33*	2	C3	5	C1	5	C3	3	C
	47*	2	C2	4	C1	3	C3	2	C5
2.5 to 3.75	33*	1	C3	3	C1	3	C1	2	C5
	47*	1	C2	2	C1	2	C3	1	C5
3.75 to 5	22	1	C3	3	C1	3	C1	2	C5
	33	1	C2	2	C1	2	C1	1	C5
	47	1	C2	2	C1	1	C3	1	C5
5 to 6.25	22	1	C5	2	C6	2	C3	2	C5
	33	1	C4	1	C6	2	C1	1	C5
	47	1	C4	1	C6	1	C3	1	C5
	68	1	C4	1	C6	1	C1	1	C5
6.25 to 7.5	22	1	C5	1	C6	2	C1	1	C5
	33	1	C4	1	C6	1	C3	1	C5
	47	1	C4	1	C6	1	C1	1	C5
	68	1	C4	1	C2	1	C1	1	C5
7.5 to 10	33	1	C7	1	C6	1	C14	1	C5
	47	1	C7	1	C6	1	C14	1	C5
	68	1	C7	1	C2	1	C14	1	C2
	100	1	C7	1	C2	1	C14	1	C2
10 to 12.5	33	1	C7	1	C6	1	C14	1	C5
	47	1	C7	1	C2	1	C14	1	C5
	68	1	C7	1	C2	1	C9	1	C2
	100	1	C7	1	C2	1	C9	1	C2
12.5 to 15	33	1	C9	1	C10	1	C15	1	C2
	47	1	C9	1	C10	1	C15	1	C2
	68	1	C9	1	C10	1	C15	1	C2
	100	1	C9	1	C10	1	C15	1	C2
15 to 20	33	1	C10	1	C7	1	C15	1	C2
	47	1	C10	1	C7	1	C15	1	C2
	68	1	C10	1	C7	1	C15	1	C2
	100	1	C10	1	C7	1	C15	1	C2
20 to 30	33	No Values Available		1	C7	1	C16	1	C2
	47			1	C7	1	C16	1	C2
	68			1	C7	1	C16	1	C2
	100			1	C7	1	C16	1	C2
30 to 37	10	No Values Available		1	C12	1	C20	1	C10
	15			1	C11	1	C20	1	C11
	22			1	C11	1	C20	1	C10
	33			1	C11	1	C20	1	C10
	47			1	C11	1	C20	1	C10
	68			1	C11	1	C20	1	C10

* Set to a higher value for a practical design solution. See Applications Hints section
No. represents the number of identical capacitor types to be connected in parallel
C Code indicates the Capacitor Reference number in Table 2 for identifying the specific component from the manufacturer.

Physical Dimensions inches (millimeters)

unless otherwise noted

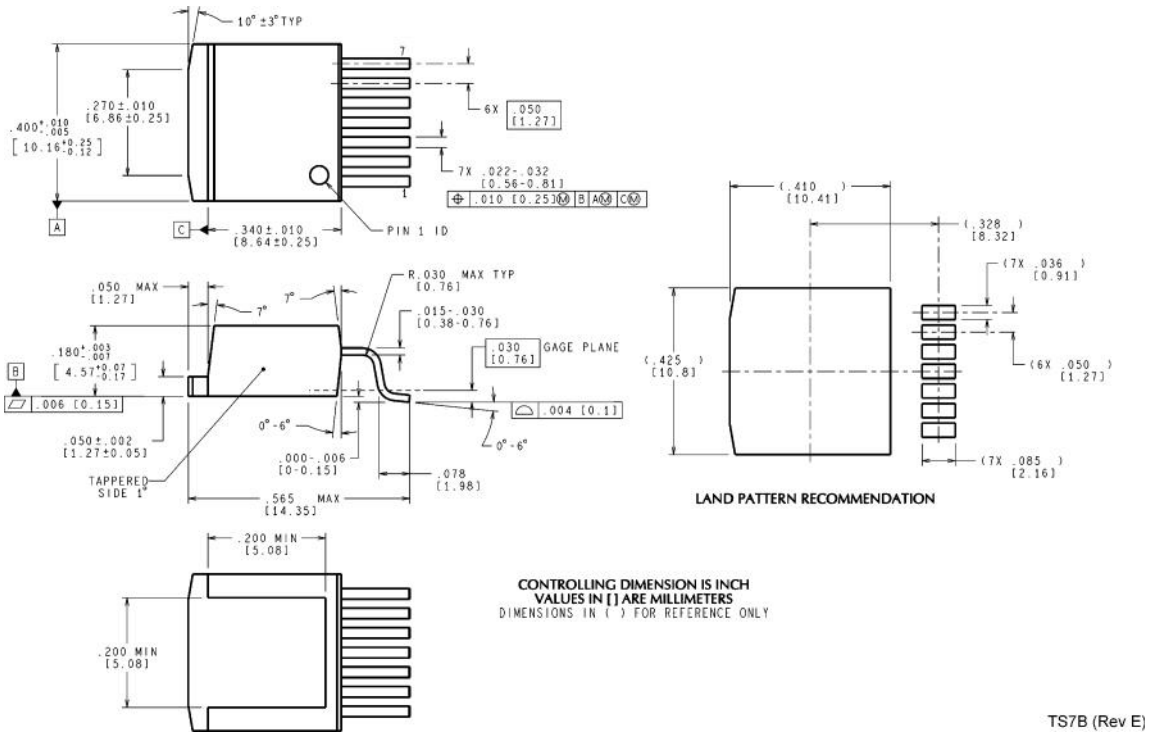

TO-263 Surface Mount Power Package
Order Number LM2676S-3.3, LM2676S-5.0,
LM2676S-12 or LM2676S-ADJ
NS Package Number TS7B

Physical Dimensions inches (millimeters) unless otherwise noted (Continued)

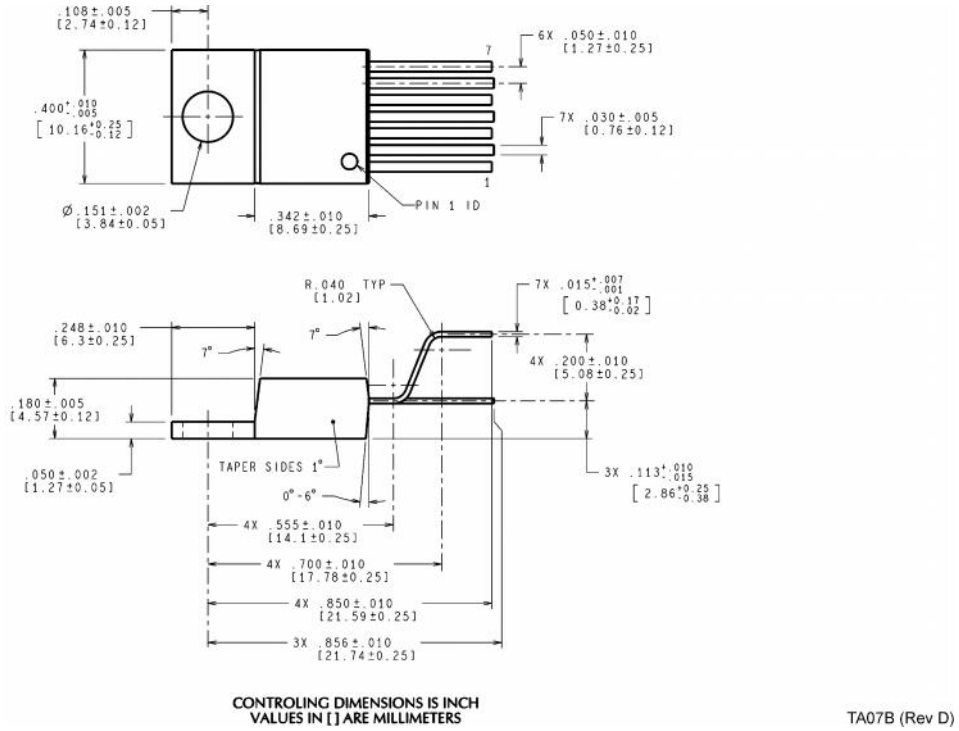

TO-220 Power Package
Order Number LM2676T-3.3, LM2676T-5.0,
LM2676T-12 or LM2676T-ADJ
NS Package Number TA07B

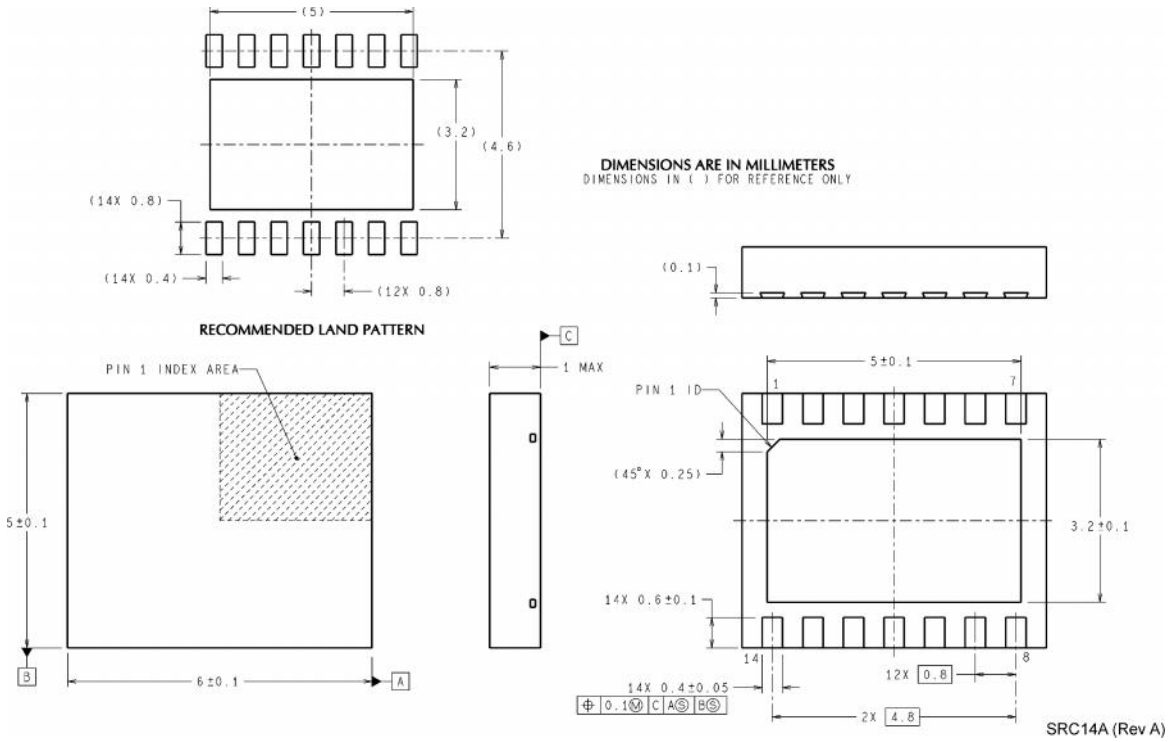

14-Lead LLP Package
NS Package Number SRC14A

Notes

LIFE SUPPORT POLICY

NATIONAL'S PRODUCTS ARE NOT AUTHORIZED FOR USE AS CRITICAL COMPONENTS IN LIFE SUPPORT DEVICES OR SYSTEMS WITHOUT THE EXPRESS WRITTEN APPROVAL OF THE PRESIDENT AND GENERAL COUNSEL OF NATIONAL SEMICONDUCTOR CORPORATION. As used herein:

1. Life support devices or systems are devices or systems which, (a) are intended for surgical implant into the body, or (b) support or sustain life, and whose failure to perform when properly used in accordance with instructions for use provided in the labeling, can be reasonably expected to result in a significant injury to the user.
2. A critical component is any component of a life support device or system whose failure to perform can be reasonably expected to cause the failure of the life support device or system, or to affect its safety or effectiveness.

National Semiconductor
Americas Customer
Support Center
Email: new.feedback@nsc.com
Tel: 1-800-272-9959

www.national.com

National Semiconductor
Europe Customer Support Center
Fax: +49 (0) 180-530 85 86
Email: europe.support@nsc.com
Deutsch Tel: +49 (0) 69 9508 6208
English Tel: +44 (0) 870 24 0 2171
Français Tel: +33 (0) 1 41 91 8790

National Semiconductor
Asia Pacific Customer
Support Center
Email: ap.support@nsc.com

National Semiconductor
Japan Customer Support Center
Fax: 81-3-5639-7507
Email: jpn.feedback@nsc.com
Tel: 81-3-5639-7560

National does not assume any responsibility for use of any circuitry described, no circuit patent licenses are implied and National reserves the right at any time without notice to change said circuitry and specifications.