Single Types

CA311
LM311•

The RCA CA311 is a monolithic voltage comparator that operates from dual supplies up to ±15 V, or from single supplies down to 5 V. This single capability makes the outputs of these devices compatible with RTL, DTL, TTL, and MOS circuits. In addition they can drive lamps or relays, and switch voltages up to 40 V at currents as high as 50 mA.

Type No.	Package	Operating Temp. Range
CA311T	8-Lead TO-5	0 to +70°C
CA311S	8-Lead TO-5 DIL-CAN	0 to +70°C
CA311E	8-Lead Mini-DIP	0 to +70°C
CA311H	Chip	-55 to +125°C

Features:
- *Single- or dual-supply operation*
- *Power consumption - 135 mW at ±15 V*
- *Strobe capability*
- *Low input-offset current - 6 nA(typ.)*
- *Differential input-voltage range -±30 V*
- *Directly interchangeable with National Semiconductor LM311 Series*

Applications:
- *Multivibrators*
- *Positive and negative peak detectors*
- *Crystal oscillators*
- *Zero-crossing detectors*
- *Solenoid, relay, and lamp drivers*

Quad Types

CA139, CA139A, CA239, CA239A, CA339, CA339A, LM339•, LM339A•

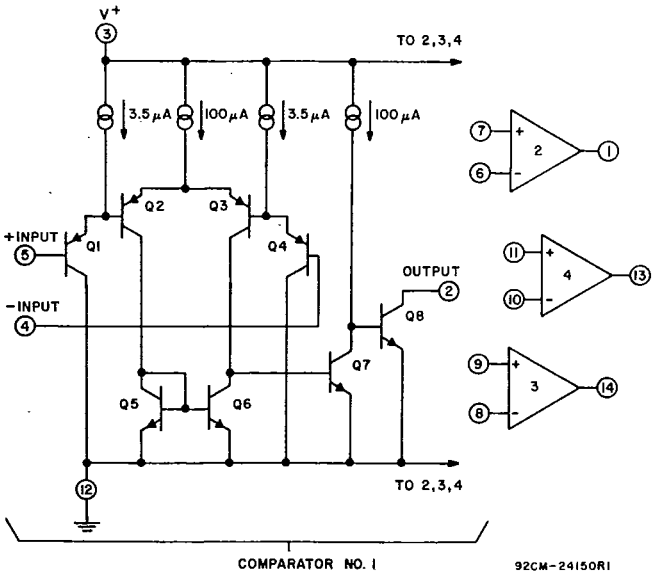

Features:
- *Operation from single or dual supplies*
- *Common-mode input-voltage range to ground*
- *Output voltage compatible with TTL, DTL, ECL, MOS, CMOS*
- *Differential input-voltage range equal to the supply voltage*
- *Maximum input-offset voltage (V_{IO}):*
  CA139A, CA239A, CA339A - 2 mV
  CA139, CA239, CA339 - 5 mV
- *Replacement for industry types 139, 239, 339, 139A, 239A, and 339A*

Applications:
- *Square-wave generators*
- *Time-delay generators*
- *Pulse generators*
- *Multivibrators*
- *High-voltage digital logic gates*
- *A/D converters*
- *MOS clock timers*

Type No.	Package	Operating Time Range
CA139E, AE; CA239E, AE, C339E, AE	14-Lead DIP	-55 to +125°C
CA139F, AF; CA239F, AF; CA339F	14-Lead DIC	
CA339	Chip	

Electrical Characteristics: T_A = 25°C (See Note 1)

Type	V_{IO} (Max) mV	I_{IO} (Max) nA	A_{OL} (Typ) V/mV	I_{IB} (Max) nA	Max V^+, V^-	V_{SAT} (max) V	Typ. Large Signal Response Time ns
CA311, LM311•	7.5	50	200	250	36	0.4	200
CA139	5	25	200	100	36	0.4	1300
CA139A	2	25	200	100	36	0.4	1300
CA239	5	50	200	250	36	0.4	1300
CA239A	2	50	200	250	36	0.4	1300
CA339, LM339•	5	50	200	250	36	0.4	1300
CA339A, LM339A•	2	50	200	250	36	0.4	1300

•Technical Data on LM branded types are identical to the corresponding CA branded types.

Note 1: V^+, V^- = 5 V for CA139, CA239, CA339 Series
V^+, V^- = 15 V for CA311 Series