HEWLETT PACKARD

Surface Mount Zero Bias Schottky Detector Diodes

Technical Data

HSMS-285X Series

Features

- **Surface Mount SOT-23/ SOT-143 Package**
- **High Detection Sensitivity:**
  40 mV/µW at 915 MHz
  30 mV/µW at 2.45 GHz
  22 mV/µW at 5.80 GHz
- **Low Flicker Noise:**
  -162 dBV/Hz at 100 Hz
- **Low FIT (Failure in Time) Rate***
- **High and Low Profile Versions**
- **Tape and Reel Options Available**

* For more information see the Surface Mount Schottky Reliability Data Sheet.

Package Lead Code Identification

Top View

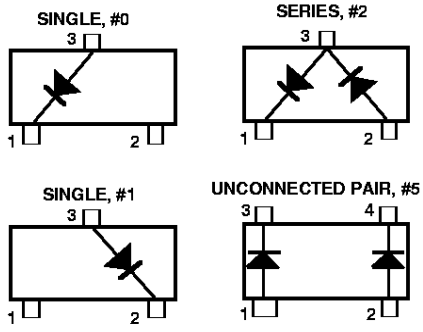

Description

Hewlett-Packard's HSMS-285X family of low cost surface mount zero bias Schottky detector diodes have been designed and optimized for use from 915 MHz to 5.8 GHz and are ideal for RF/ID and RF Tag applications requiring zero bias signal detection, modulation, RF to DC conversion or voltage doubling.

Available in various package configurations, the superior detection sensitivity and zero bias properties of the HSMS-285X allow for easier, less costly, high volume RF Identification and RF Tag system (Passive or Active, Read Only or Read/Write) designs.

DC Electrical Specifications, T_A = +25°C, Single Diode

Part Number HSMS-	Package Marking Code[1]	Lead Code	Configuration	Maximum Forward Voltage V_F (mV)		Typical Capacitance C_T (pF)
2850	P0	0	Single[2]	150	250	0.3
2851	P1	1	Single[2]			
2852	P2	2	Series Pair[3,4]			
2855	P5	5	Unconnected Pair[3,4]			
Test Conditions				I_F = 0.1 mA	I_F = 1.0 mA	V_R = -0.5 V to -1.0 V, f = 1 MHz

Notes:

1. Package marking code is in white. Package marking codes for low profile are designated by a suffix "L".
2. Batch Matching available upon request.
   ΔV_F = 10 mV at 1.0 mA.
   ΔC_T = 0.05 pF at -0.5 V.
3. ΔV_F for diodes in pairs is 15.0 mV maximum at 1.0 mA.
4. ΔC_T for diodes in pairs is 0.05 pF maximum at -0.5 V.

ESD WARNING: Handling Precautions Should Be Taken To Avoid Static Discharge.

RF Electrical Parameters, T_A = +25°C, Single Diode

Part Number HSMS-	Typical Tangential Sensitivity TSS (dBm) @ f = 915 MHz	2.45 GHz	5.8 GHz	Typical Voltage Sensitivity γ (mV/μW) @ f = 915 MHz	2.45 GHz	5.8 GHz	Typical Video Resistance R_V (KΩ)
2850 2851 2852 2855	-57.0	-56.0	-55.0	40.0	30.0	22.0	8.0
Test Conditions	Video Bandwidth = 2 MHz			Power in = -40 dBm, R_L = 100 KΩ, I bias = 0			

Absolute Maximum Ratings, T_A = +25°C, Single Diode

Symbol	Parameter	Absolute Maximum[1]
P_T	Total Device Dissipation[2]	75 mW
P_{IV}	Peak Inverse Voltage	2.0 V
T_J	Junction Temperature	150°C
T_{STG}	Storage Temperature	-65°C to 150°C
T_{OP}	Operating Temperature	-65°C to 150°C

Notes:

1. Operation in excess of any one of these conditions may result in permanent damage to the device.
2. CW Power Dissipation at T_{LEAD} = +25°C. Derate linearly to zero at maximum rated temperature.

Equivalent Circuit Model

HSMS-2850, HSMS-2851; Singles

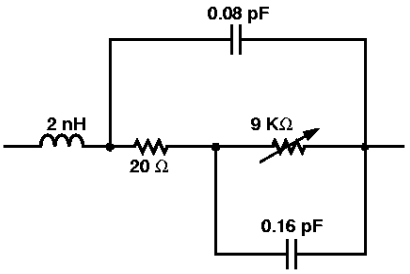

Spice Parameters

I_S = 3.0 x 10E-6 A	E_G = 0.69 eV
R_S = 25 Ω	C_{JO} = 0.17 pF
N = 1.055	$P_B(V_J)$ = 0.35 V
B_V = 3.8 V	M = 0.5
I_{BV} = 3.0 x 10E-4 A	P_T(XTI) = 2.0

Typical Input Impedance at Pin = -40 dBm, HSMS-2850

Freq. (GHz)	S_{11} (Mag.)	S_{11} (Angle)
0.25	0.989	-2.157
0.50	0.988	-4.327
0.75	0.988	-6.525
1.00	0.987	-8.765
1.25	0.986	-11.062
1.50	0.984	-13.432
1.75	0.982	-15.893
2.00	0.980	-18.465
2.25	0.977	-21.170
2.50	0.974	-24.032
2.75	0.970	-27.079
3.00	0.965	-30.344
3.25	0.959	-33.864
3.50	0.953	-37.682
3.75	0.945	-41.848
4.00	0.936	-46.423
4.25	0.925	-51.474
4.50	0.912	-57.081
4.75	0.898	-63.337
5.00	0.880	-70.345
5.25	0.861	-78.219
5.50	0.839	-87.077
5.75	0.815	-97.031
6.00	0.790	-108.16

Typical Parameters, Single Diode

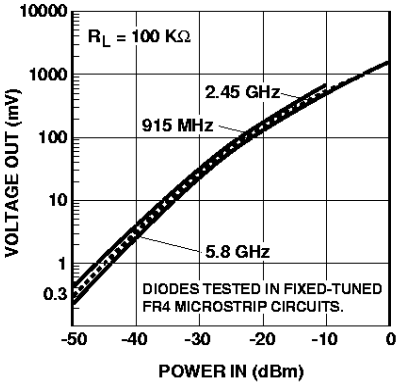

Figure 1. +25°C Output Voltage vs. Input Power.

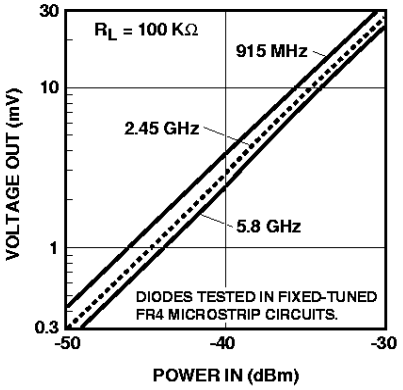

Figure 2. +25°C Expanded Output Voltage vs. Input Power.

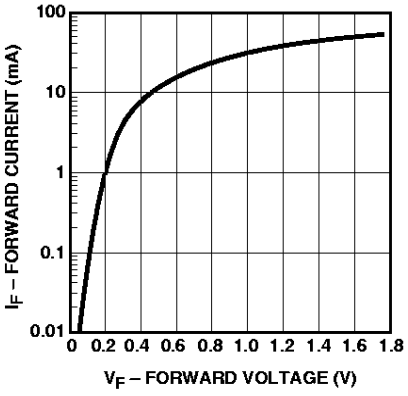

Figure 3. +25°C Forward Current vs. Forward Voltage.

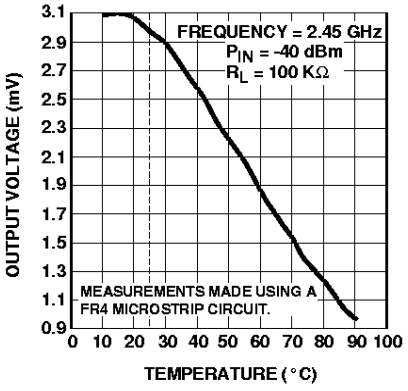

Figure 4. Output Voltage vs. Temperature.

HSMS-285X Applications Information

Introduction

Hewlett-Packard's family of HSMS-285X zero bias Schottky diodes have been developed specifically for low cost, high volume detector applications where bias current is not available.

Schottky Barrier Diode Characteristics

Stripped of its package, a Schottky barrier diode chip consists of a metal-semiconductor barrier formed by deposition of a metal layer on a semiconductor. The most common of several different types, the passivated diode, is shown in Figure 5, along with its equivalent circuit.

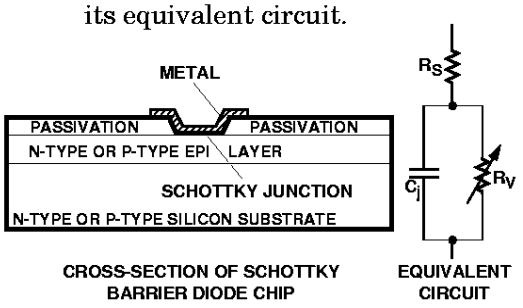

Figure 5. Schottky Diode Chip.

R_S is the parasitic series resistance of the diode, the sum of the bondwire and leadframe resistance, the resistance of the bulk layer of silicon, etc. RF energy coupled into R_S is lost as heat - it does not contribute to the rectified output of the diode. C_J is parasitic junction capacitance of the diode, controlled by the thickness of the epitaxial layer and the diameter of the Schottky contact. R_V is the video resistance of the diode, a function of the total current flowing through it.

$$R_V \approx \frac{26{,}000}{I_S + I_e}$$

where

I_S = diode saturation current in μA

I_e = total external current in μA

The external current I_e is comprised of bias current and circulating current generated through the rectification of RF. I_S is a function of diode barrier height, and can range from picoamps for high barrier diodes to as much as 5 μA for very low barrier diodes.

The Height of the Schottky Barrier

The current-voltage characteristic of a Schottky barrier diode at room temperature is described by the following equation:

$$I = I_S \left(\exp\left(\frac{V - IR_S}{0.026}\right) - 1\right)$$

On a semi-log plot (as shown in the HP catalog) the current graph will be a straight line with inverse slope 2.3 X 0.026 = 0.060 volts per cycle (until the effect of R_S is seen in a curve that droops at high current). All Schottky diode curves have the same slope, but not necessarily the same value of current for a given voltage. This is determined by the saturation current, I_S, and is related to the barrier height of the diode.

Through the choice of p-type or n-type silicon, and the selection of metal, one can tailor the characteristics of a Schottky diode. Barrier height will be altered, and at the same time C_J and R_S will be changed. In general, very low barrier height diodes (with high values of I_S, suitable for zero bias applications) are realized on p-type silicon. Such diodes suffer from higher values of R_S than do the n-type. Thus, p-type diodes are generally reserved for detector applications (where very high values of R_V swamp out high R_S) and n-type diodes are used for mixer applications (where high L.O. drive levels keep R_V low).

Measuring Diode Parameters

The measurement of the five elements which make up the equivalent circuit for a packaged Schottky diode (see Figure 8, below) is a complex task. Various techniques are used for each element. The task begins with the elements of the diode chip itself.

R_S is perhaps the easiest to measure accurately. The V-I curve is measured for the diode under forward bias, and the slope of the curve is taken at some relatively high value of current (such as 5 mA). This slope is converted into a resistance R_d.

$$R_S = R_d - \frac{0.026}{I_f}$$

R_V and C_J are very difficult to measure. Consider the impedance of C_J = 0.16 pF when measured at 1 MHz — it is approximately 1 MΩ. For a well designed zero bias Schottky, R_V is in the range of 5 to 25 kΩ, and it shorts out the junction capacitance. Moving up to a higher frequency enables the measurement of the capacitance, but it then shorts out the video resistance. The best measurement technique is to mount the diode in series in a 50 Ω microstrip test circuit and

measure its insertion loss at low power levels (around -20 dBm) using an HP8753C network analyzer. The resulting display will appear as shown in Figure 6.

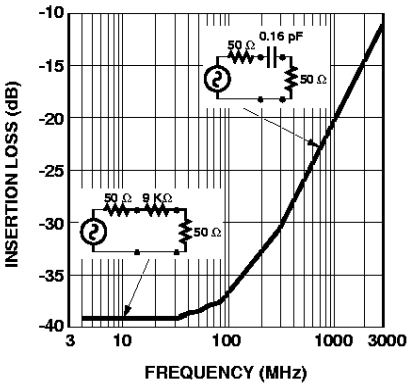

Figure 6. Measuring C_J and R_V.

At frequencies below 10 MHz, the video resistance dominates the loss and can easily be calculated from it. At frequencies above 300 MHz, the junction capacitance sets the loss, which plots out as a straight line when frequency is plotted on a log scale. Again, calculation is straightforward.

L_P and C_P are best measured on the HP8753C, with the diode terminating a 50 Ω line on the input port. The resulting tabulation of S_{11} can be put into a microwave linear analysis program having the five element equivalent circuit with R_V, C_J and R_S fixed. The optimizer can then adjust the values of L_P and C_P until the calculated S_{11} matches the measured values. Note that extreme care must be taken to de-embed the parasitics of the 50 Ω test fixture.

Detector Circuits

When DC bias is available, Schottky diode detector circuits can be used to create low cost RF and microwave receivers with a sensitivity of -55 dBm to -57 dBm.[1] Moreover, since external DC bias sets the video impedance of such circuits, they display classic square law response over a wide range of input power levels[2,3]. These circuits can take a variety of forms, but in the most simple case they appear as shown in Figure 7.

Where DC bias is not available, a zero bias Schottky diode is used to replace the conventional Schottky in these circuits, and bias choke L_1 is eliminated. The circuit then is reduced to a diode, an RF impedance matching network and (if required) a DC return choke and a capacitor.

In the design of such detector circuits, the starting point is the equivalent circuit of the diode, as shown in Figure 8.

Of interest in the design of the video portion of the circuit is the diode's video impedance - the other four elements of the equivalent circuit disappear at all reasonable video frequencies. In general, the lower the diode's video impedance, the better the design.

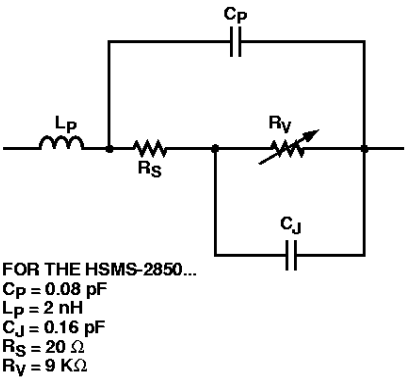

Figure 8. Equivalent Circuit of a Schottky Diode.

The situation is somewhat more complicated in the design of the RF impedance matching network, which includes the package inductance and capacitance (which can be tuned out), the series resistance, the junction capacitance and the video resistance. Of these five elements of the diode's equivalent circuit, the four parasitics are constants and the video resistance is a function of the current flowing through the diode.

$$R_V \approx \frac{26{,}000}{I_S + I_C}$$

where

I_S = diode saturation current in μA

I_C = circulating current in μA

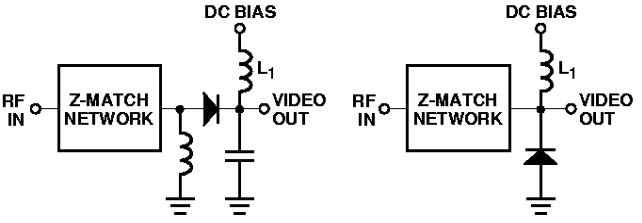

Figure 7. Basic Detector Circuits.

[1]Hewlett-Packard Application Note 923, *Schottky Barrier Diode Video Detectors.*
[2]Hewlett-Packard Application Note 986, *Square Law and Linear Detection.*
[3]Hewlett-Packard Application Note 956-5, *Dynamic Range Extension of Schottky Detectors.*

Saturation current is a function of the diode's design,[4] and it is a constant at a given temperature. For the HSMS-2850, it is typically 3 to 5 µA at 25°C. The circulating current is that produced by rectification of the RF signal, and is a function of R_V, load resistance, RF input power, diode detection sensitivity γ and the degree of RF input impedance match. Thus, it can be seen that R_V will drop as the power of the applied signal (and, correspondingly, the magnitude of I_C) is increased, resulting in a transfer characteristic which is not perfectly square-law.[4] See Figure 9.

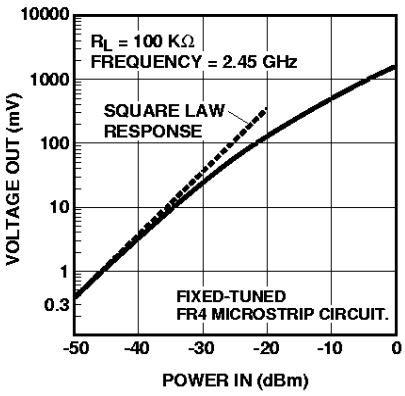

Figure 9. Transfer Characteristic of the HSMS-2850.

Nevertheless, in most applications where DC bias is not available, this approximation to square law response is quite satisfactory.

The most difficult part of the design of a detector circuit is the input impedance matching network. For very broadband detectors, a shunt 60 Ω resistor will give good input match, but at the expense of detection sensitivity.

When maximum sensitivity is required over a narrow band of frequencies, a reactive matching network is optimum. Such networks can be realized in either lumped or distributed elements, depending upon frequency, size constraints and cost limitations, but certain general design principals exist for all types.[5] Design work begins with the RF impedance of the HSMS-2850, which is given in Figure 10.

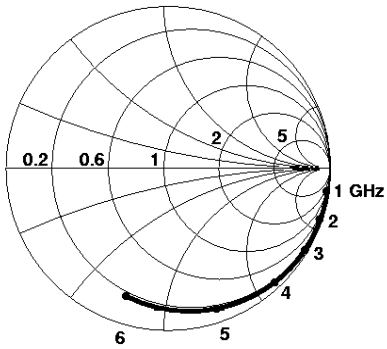

Figure 10. RF Impedance of the HSMS-2850 at -40 dBm.

915 MHz Detector Circuit

Figure 11 illustrates a simple impedance matching network for a 915 MHz detector.

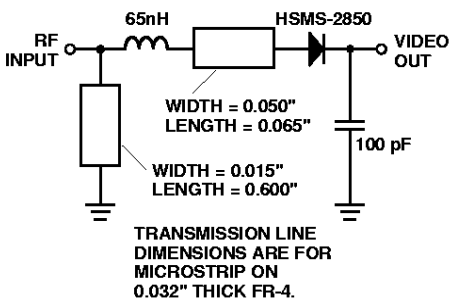

Figure 11. 915 MHz Matching Network for the HSMS-2850.

A 65 nH inductor rotates the impedance of the diode to a point on the Smith Chart where a shunt inductor can pull it up to the center. The short length of 0.065" wide microstrip line is used to mount the lead of the diode's SOT-23 package. A shorted shunt stub of length <λ/4 provides the necessary shunt inductance and simultaneously provides the return circuit for the current generated in the diode. The impedance of this circuit is given in Figure 12.

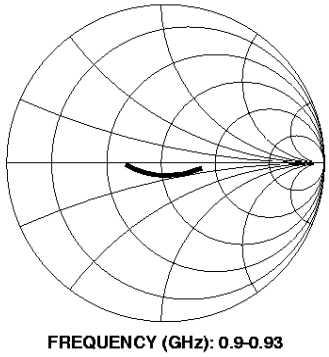

Figure 12. Input Impedance.

The input match, expressed in terms of return loss, is given in Figure 13.

As can be seen, the band over which a good match is achieved is more than adequate for 915 MHz RFID applications.

2.45 GHz Detector Circuit

At 2.45 GHz, the RF impedance of the HSMS-2850 is closer to the line of constant susceptance which passes through the center of the chart, resulting in a design which is realized entirely in distributed elements - see Figure 14.

[4]Hewlett-Packard Application Note 969, *An Optimum Zero Bias Schottky Detector Diode.*

[5]Hewlett-Packard Application Note 963, *Impedance Matching Techniques for Mixers and Detectors*

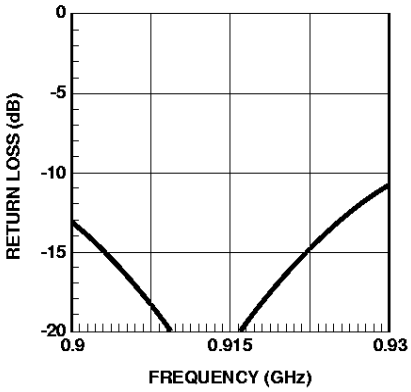

Figure 13. Input Return Loss.

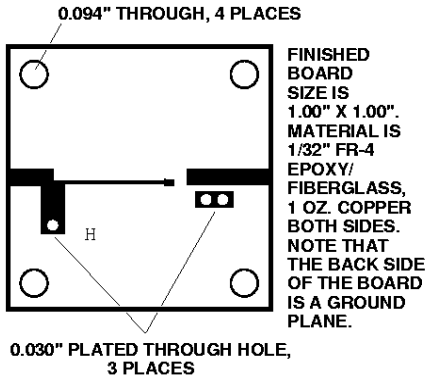

Figure 15. Physical Realization.

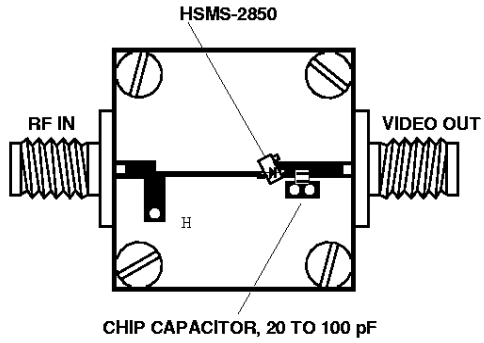

Figure 17. Test Detector.

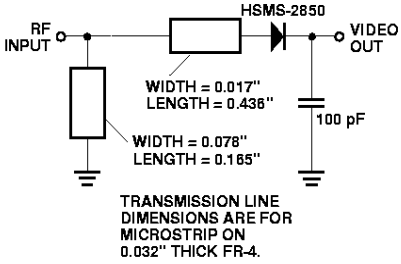

Figure 14. 2.45 GHz Matching Network for the HSMS-2850.

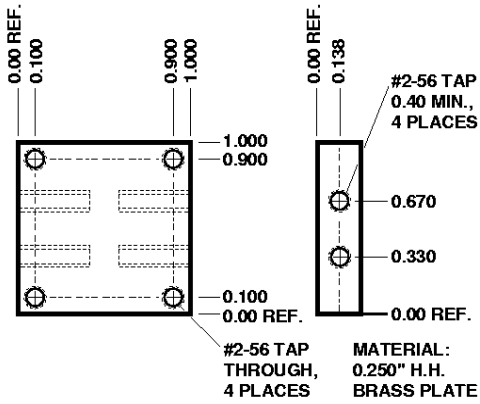

Figure 16. Mounting Plate.

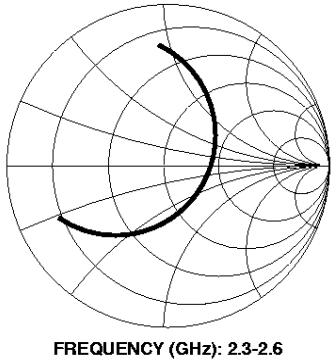

Figure 18. Input Impedance.

In order to save cost (at the expense of having a larger circuit), an open circuit shunt stub could be substituted for the chip capacitor. On the other hand, if space is at a premium, the long series transmission line at the input to the diode can be replaced with a lumped inductor.

A possible physical realization of such a network is shown in Figure 15.

This board is mounted on the brass or aluminum mounting plate shown in Figure 16.

Two SMA connectors (E.F. Johnson 142-0701-631 or equivalent), a high-Q capacitor (ATC 100A101MCA50 or equivalent), miscellaneous hardware and an HSMS-2850 are added to create the test circuit shown in Figure 17.

The calculated input impedance for this network is shown in Figure 18.

The corresponding input match is shown in Figure 19. As was the case with the lower frequency design, bandwidth is more than adequate for the intended RFID application.

A word of caution to the designer is in order. A glance at Figure 18 will reveal the fact that the circuit does not provide the optimum impedance to the diode at 2.45 GHz. The temptation will be to adjust the circuit elements to achieve an ideal single frequency match, as illustrated in Figure 20.

This does indeed result in a very good match at midband, as shown in Figure 21.

However, bandwidth is narrower and the designer runs the risk of a shift in the mid-band frequency of his circuit if

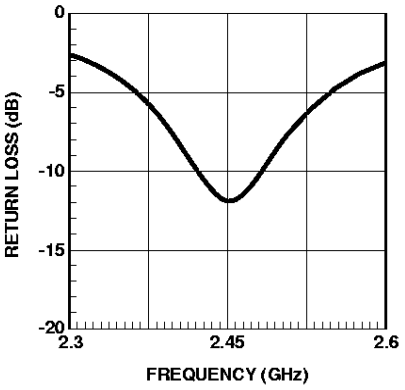

Figure 19. Input Return Loss.

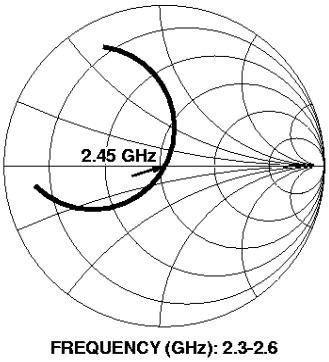

Figure 20. Input Impedance, Modified 2.45 GHz Circuit.

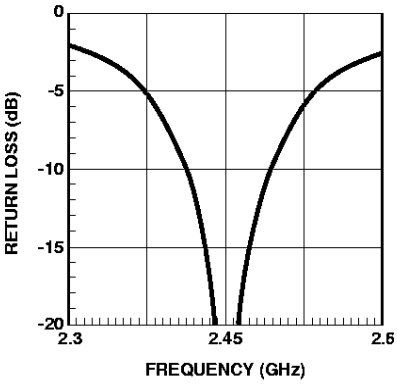

Figure 21. Input Return Loss, Modified 2.45 GHz Circuit.

there is any small deviation in circuit board or diode characteristics due to lot-to-lot variation or change in temperature. The matching technique illustrated in Figure 18 is much less sensitive to changes in diode and circuit board processing.

5.8 GHz Detector Circuit

A possible design for a 5.8 GHz detector is given in Figure 22.

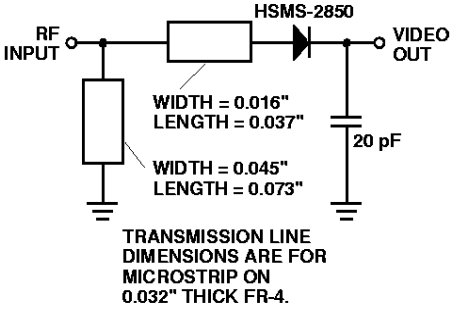

Figure 22. 5.8 GHz Matching Network for the HSMS-2850.

As was the case at 2.45 GHz, the circuit is entirely distributed element, both low cost and compact. Input impedance for this network is given in Figure 23.

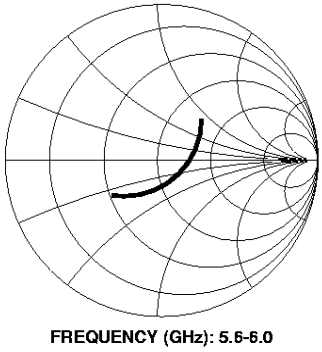

Figure 23. Input Impedance.

Input return loss, shown in Figure 24, exhibits wideband match.

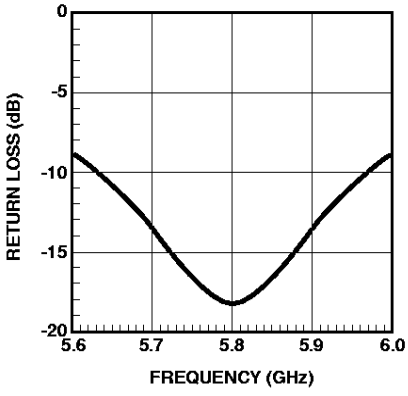

Figure 24. Input Return Loss.

Voltage Doublers

To this point, we have restricted our discussion to single diode detectors. A glance at Figure 7, however, will lead to the suggestion that the two types of single diode detectors be combined into a two diode voltage doubler[6] (known also as a full wave rectifier). Such a detector is shown in Figure 25.

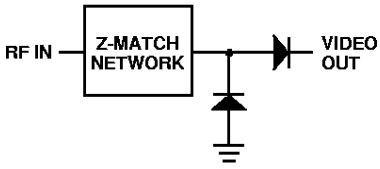

Figure 25. Voltage Doubler Circuit.

[6]Hewlett-Packard Application Note 956-4, *Schottky Diode Voltage Doubler.*

Such a circuit offers several advantages. First the voltage outputs of two diodes are added in series, increasing the overall value of voltage sensitivity for the network (compared to a single diode detector). Second, the RF impedances of the two diodes are added in parallel, making the job of reactive matching a bit easier. Such a circuit can easily be realized using the two series diodes in the HSMS-2852.

The "Virtual Battery"

The voltage doubler can be used as a virtual battery, to provide power for the operation of an I.C. or a transistor oscillator in a tag. Illuminated by the CW signal from a reader or interrogator, the Schottky circuit will produce power sufficient to operate an I.C. or to charge up a capacitor for a burst transmission from an oscillator. Where such virtual batteries are employed, the bulk, cost, and limited lifetime of a battery are eliminated.

Flicker Noise

Reference to Figure 5 will show that there is a junction of metal, silicon, and passivation around the rim of the Schottky contact. It is in this three-way junction that flicker noise[7] is generated. This noise can severely reduce the sensitivity of a crystal video receiver utilizing a Schottky detector circuit if the video frequency is below the noise corner. Flicker noise can be substantially reduced by the elimination of passivation, but such diodes cannot be mounted in non-hermetic packages. p-type silicon Schottky diodes have the least flicker noise at a given value of external bias (compared to n-type silicon or GaAs). At zero bias, such diodes can have extremely low values of flicker noise. For the HSMS-2850, the noise temperature ratio is given in Figure 26.

Noise temperature ratio is the quotient of the diode's noise power (expressed in dBV/Hz) divided by the noise power of an ideal resistor of resistance $R = R_V$.

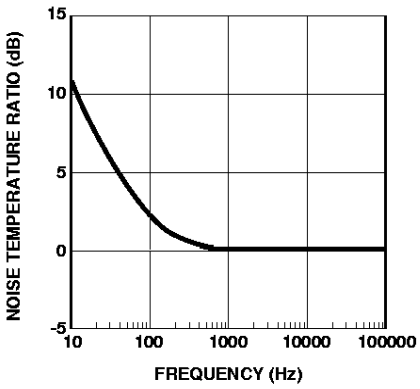

Figure 26. Typical Noise Temperature Ratio.

For an ideal resistor R, at 300°K, the noise voltage can be computed from

$$v = 1.287 \times 10^{-10} \sqrt{R} \text{ volts/Hz}$$

which can be expressed as

$$20 \log_{10} v \quad \text{dBV/Hz}$$

Thus, for a diode with R_V = 9 KΩ, the noise voltage is 12.2 nV/Hz or -158 dBV/Hz. On the graph of Figure 26, -158 dBV/Hz would replace the zero on the vertical scale to convert the chart to one of absolute noise voltage vs. frequency.

Diode Burnout

Any Schottky junction, be it an RF diode or the gate of a MESFET, is relatively delicate and can be burned out with excessive RF power. Many crystal video receivers used in RFID (tag) applications find themselves in poorly controlled environments where high power sources may be present. Examples are the areas around airport and FAA radars, nearby ham radio operators, the vicinity of a broadcast band transmitter, etc. In such environments, the Schottky diodes of the receiver can be protected by a device known as a limiter diode.[8] Formerly available only in radar warning receivers and other high cost electronic warfare applications, these diodes have been adapted to commercial and consumer circuits.

Hewlett-Packard offers a complete line of surface mountable PIN limiter diodes. Most notably, our HSMP-4820 (SOT-23) can act as a very fast (nanosecond) power-sensitive switch when placed between the antenna and the Schottky diode, shorting out the RF circuit temporarily and reflecting the excessive RF energy back out the antenna.

[7]Hewlett-Packard Application Note 965-3, *Flicker Noise in Schottky Diodes.*

[8]Hewlett-Packard Application Note 1050, *Low Cost, Surface Mount Power Limiters.*

Ordering Information

Specify part number followed by option under. For example:

H SMS - 285X #X XX

- XX — Bulk or Tape and Reel Option
- #X — Profile: Standard = T, or Low = L
- 285X — Part Number
- SMS — Surface Mount Schottky
- H — Hewlett-Packard

Profile Option Descriptions

Standard Profile

#T30 = Bulk

#T31 = 3K pc. Tape and Reel, Device Orientation Figure 1,3.

#T32 = 3K pc. Tape and Reel, Device Orientation Figure 2,4.

Low Profile

#L30 = Bulk

#L31 = 3K pc. Tape and Reel, Device Orientation Figure 1,3

#L32 = 3K pc. Tape and Reel, Device Orientation Figure 2,4.

Tape and Reeling conforms to Electronic Industries RS-481, "Taping of Surface Mounted Components for Automated Placement."

Package Dimensions

Outline 23 (SOT-23)

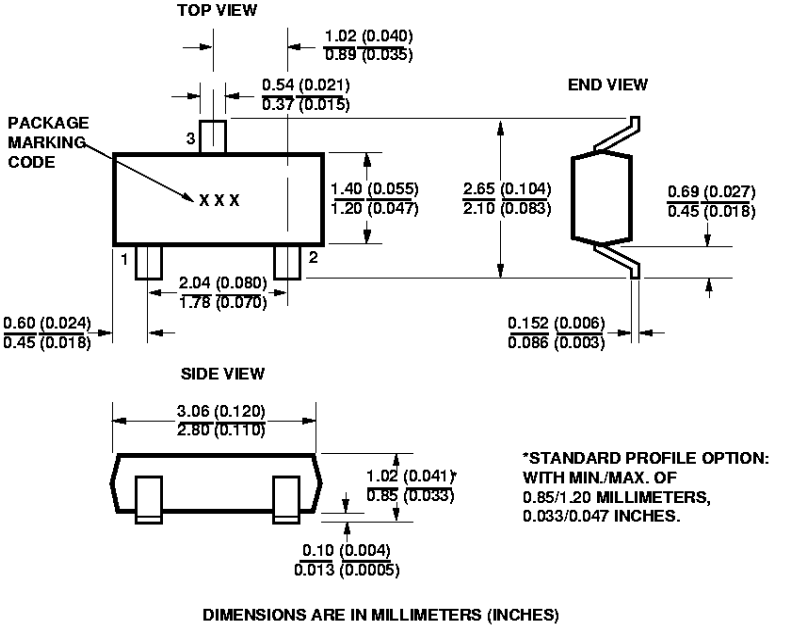

Outline 143 (SOT-143)

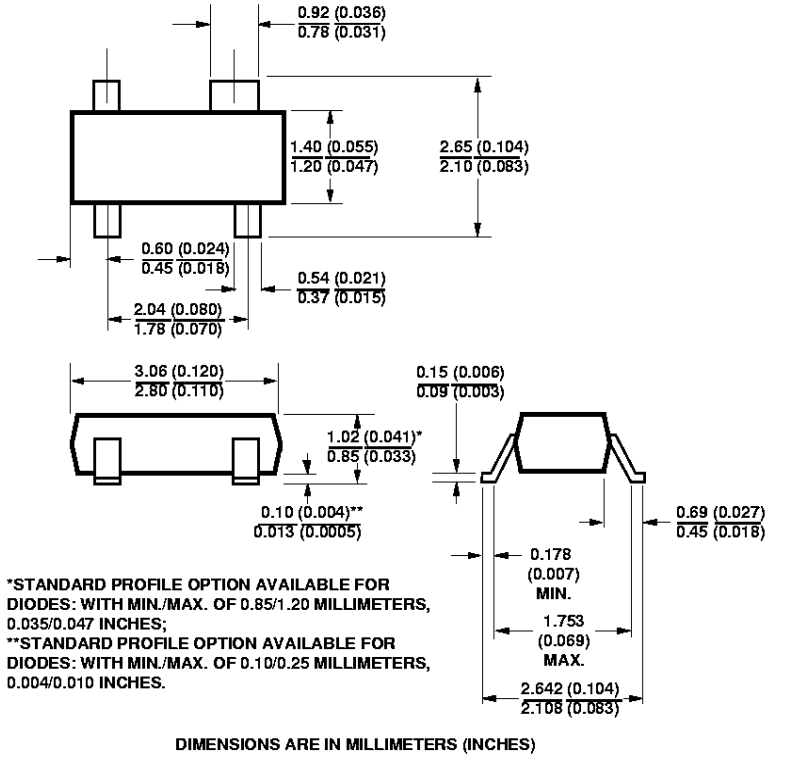

Package Characteristics

Lead Material	Alloy 42
Lead Finish	Tin-Lead
Max. Soldering Temp.	260°C for 5 sec.
Min. Lead Strength	2 pounds pull
Typical Package Inductance	2 nH (opposite leads)
Typical Package Capacitance	0.08 pF (opposite leads)

Device Orientation

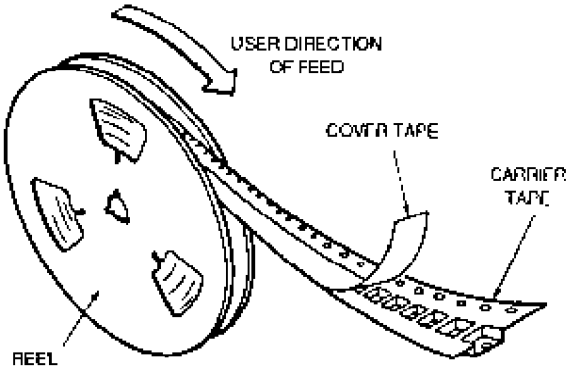

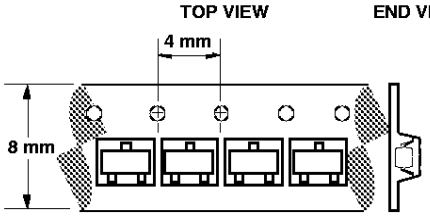

Figure 27. Options T31, L31, for SOT-23 Packages.

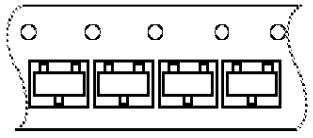

Figure 28. Options T32, L32 for SOT-23 Packages.

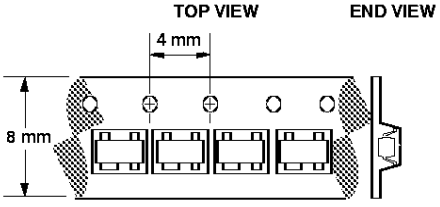

Figure 29. Options T31, L31 for SOT-143 Packages.

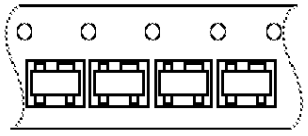

Figure 30. Options T32, L32 for SOT-143 Packages.

For more information:

United States*

Europe*

Far East/Australasia: (65) 290-6305

Canada: (416) 206-4725

Japan: (81) 3 3331-6111

*Call your local HP sales office listed in your telephone directory. Ask for a Components representative.

Data Subject to Change
Copyright © 1994 Hewlett-Packard Co.

Obsoletes 5963-2333E (7/94)

Printed in U.S.A. 5963-5030E (11/94)