8-bit high-speed analog-to-digital converter

TDA8703

FEATURES

- 8-bit resolution
- Sampling rate up to 40 MHz
- High signal-to-noise ratio over a large analog input frequency range (7.1 effective bits at 4.43 MHz full-scale input)
- Binary or two's complement 3-state TTL outputs
- Overflow/underflow 3-state TTL output
- TTL compatible digital inputs
- Low-level AC clock input signal allowed
- Internal reference voltage generator
- Power dissipation only 290 mW (typical)
- Low analog input capacitance, no buffer amplifier required
- No sample-and-hold circuit required.

APPLICATIONS

- General purpose high-speed analog-to-digital conversion
- Digital TV, IDTV
- Subscriber TV decoder
- Satellite TV decoders
- Digital VCR.

GENERAL DESCRIPTION

The TDA8703 is an 8-bit high-speed Analog-to-Digital Converter (ADC) for video and other applications.
It converts the analog input signal into 8-bit binary-coded digital words at a maximum sampling rate of 40 MHz.
All digital inputs and outputs are TTL compatible, although a low-level AC clock input signal is allowed.

ORDERING INFORMATION

TYPE NUMBER	PACKAGE		
	NAME	DESCRIPTION	VERSION
TDA8703	DIP24	plastic dual in-line package; 24 leads (600 mil)	SOT101-1
TDA8703T	SO24	plastic small outline package; 24 leads; body width 7.5 mm	SOT137-1

7110826 0107291 T1T

QUICK REFERENCE DATA

SYMBOL	PARAMETER	CONDITIONS	MIN.	TYP.	MAX.	UNIT
V_{CCA}	analog supply voltage		4.5	5.0	5.5	V
V_{CCD}	digital supply voltage		4.5	5.0	5.5	V
V_{CCO}	output stages supply voltage		4.2	5.0	5.5	V
I_{CCA}	analog supply current		–	28	36	mA
I_{CCD}	digital supply current		–	19	25	mA
I_{CCO}	output stages supply current		–	11	14	mA
ILE	DC integral linearity error		–	–	±1	LSB
DLE	DC differential linearity error		–	–	±1/2	LSB
AILE	AC integral linearity error	note 1	–	–	±2	LSB
B	–3 dB bandwidth	note 2; f_{CLK} = 40 MHz	–	19.5	–	MHz
$f_{CLK}/f_{\overline{CLK}}$	maximum conversion rate	note 3	40	–	–	MHz
P_{tot}	total power dissipation		–	290	415	mW

Notes

1. Full-scale sinewave (f_i = 4.4 MHz; f_{CLK}; $f_{\overline{CLK}}$ = 27 MHz).
2. The –3 dB bandwidth is determined by the 3 dB reduction in the reconstructed output (full-scale signal at input).
3. The circuit has two clock inputs CLK and $\overline{CLK}$. There are four modes of operation:
   a) TTL (mode 1); $\overline{CLK}$ decoupled to DGND by a capacitor. CLK input is TTL threshold voltage of 1.5 V and sampling on the LOW-to-HIGH transition of the input clock signal.
   b) TTL (mode 2); CLK decoupled to DGND by a capacitor. $\overline{CLK}$ input is TTL threshold voltage of 1.5 V and sampling on the HIGH-to-LOW transition of the input clock signal.
   c) AC drive modes (modes 3 and 4); When driving the CLK input directly and with any AC signal of 0.5 V (peak-to-peak value) imposed on a DC level of 1.5 V, sampling takes place on the LOW-to-HIGH transition of the clock signal. When driving the $\overline{CLK}$ input with such a signal, sampling takes place on the HIGH-to-LOW transition.
   d) If one of the clock inputs is not driven, then it is recommended to decouple this input to DGND with a 100 nF capacitor.

7110826 0107292 956

BLOCK DIAGRAM

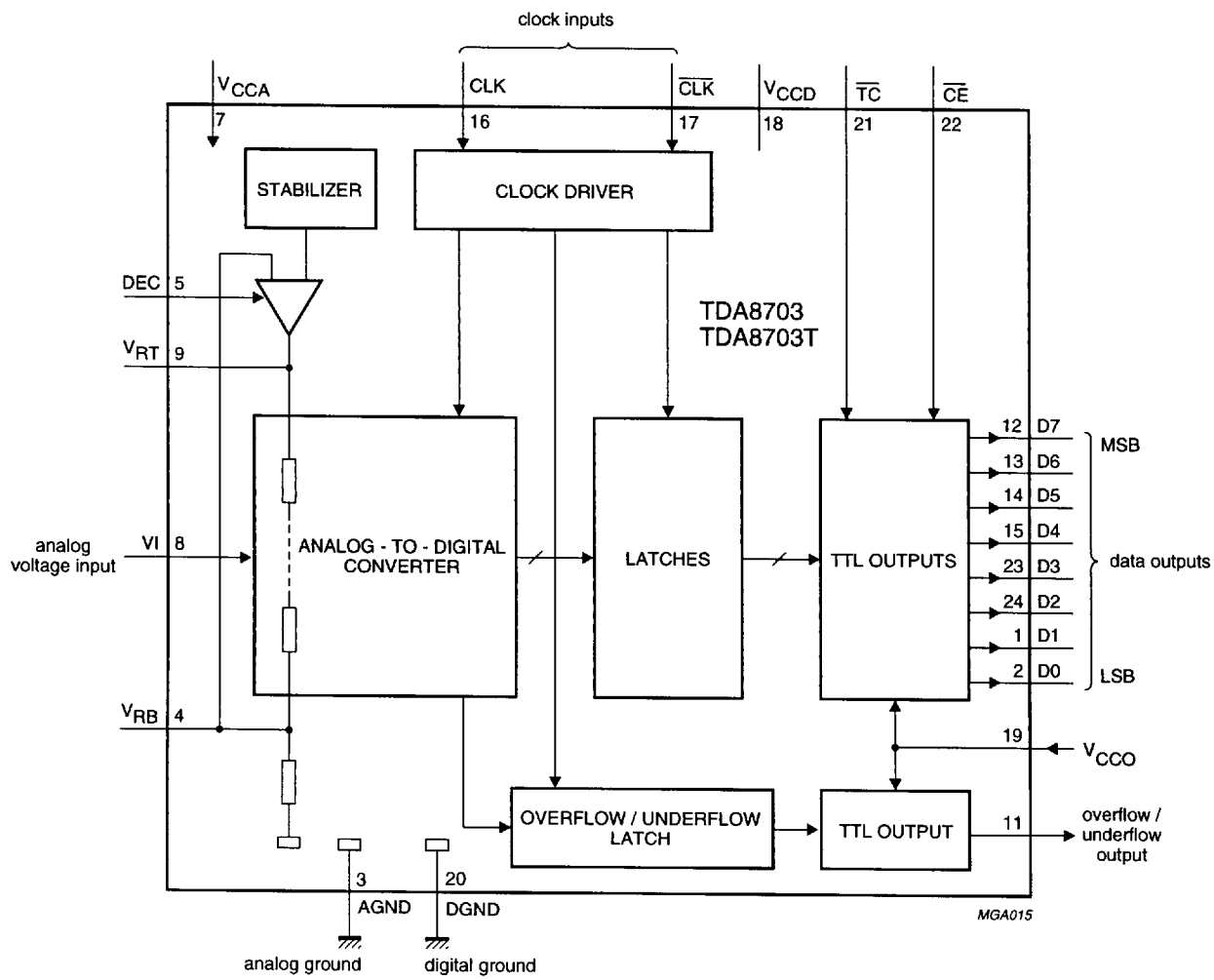

Fig.1 Block diagram.

7110826 0107293 892

PINNING

SYMBOL	PIN	DESCRIPTION
D1	1	data output; bit 1
D0	2	data output; bit 0 (LSB)
AGND	3	analog ground
V_{RB}	4	reference voltage bottom (decoupling)
DEC	5	decoupling input (internal stabilization loop decoupling)
n.c.	6	not connected
V_{CCA}	7	positive supply voltage for analog circuits (+5 V)
VI	8	analog voltage input
V_{RT}	9	reference voltage top (decoupling)
n.c.	10	not connected
O/UF	11	overflow/underflow data output
D7	12	data output; bit 7 (MSB)
D6	13	data output; bit 6
D5	14	data output; bit 5
D4	15	data output; bit 4
CLK	16	clock input
$\overline{CLK}$	17	complementary clock input
V_{CCD}	18	positive supply voltage for digital circuits (+5 V)
V_{CCO}	19	positive supply voltage for output stages (+5 V)
DGND	20	digital ground
$\overline{TC}$	21	input for two's complement output (TTL level input, active LOW)
$\overline{CE}$	22	chip enable input (TTL level input, active LOW)
D3	23	data output; bit 3
D2	24	data output; bit 2

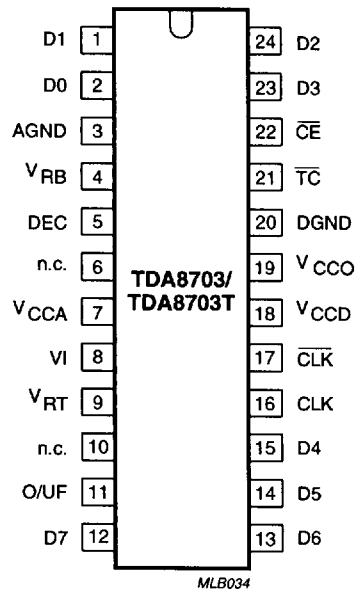

Fig.2 Pin configuration.

7110826 0107294 729

LIMITING VALUES

In accordance with the Absolute Maximum Rating System (IEC 134).

SYMBOL	PARAMETER	CONDITIONS	MIN.	MAX.	UNIT
V_{CCA}	analog supply voltage		−0.3	+7.0	V
V_{CCD}	digital supply voltage		−0.3	+7.0	V
V_{CCO}	output stages supply voltage		−0.3	+7.0	V
$V_{CCA} - V_{CCD}$	supply voltage differences		−1.0	+1.0	V
$V_{CCO} - V_{CCD}$	supply voltage differences		−1.0	+1.0	V
$V_{CCA} - V_{CCO}$	supply voltage differences		−1.0	+1.0	V
V_{VI}	input voltage range	referenced to AGND	−0.3	+7.0	V
$V_{CLK}/V_{\overline{CLK}}$	AC input voltage for switching (peak-to-peak value)	note 1; referenced to DGND	−	2.0	V
I_O	output current		−	+10	mA
T_{stg}	storage temperature		−55	+150	°C
T_{amb}	operating ambient temperature		0	+70	°C
T_j	junction temperature		−	+125	°C

Notes

1. The circuit has two clock inputs CLK and $\overline{CLK}$. There are four modes of operation:
   a) TTL (mode 1); $\overline{CLK}$ decoupled to DGND by a capacitor. CLK input is TTL threshold voltage of 1.5 V and sampling on the LOW-to-HIGH transition of the input clock signal.
   b) TTL (mode 2); CLK decoupled to DGND by a capacitor. $\overline{CLK}$ input is TTL threshold voltage of 1.5 V and sampling on the HIGH-to-LOW transition of the input clock signal.
   c) AC drive modes (modes 3 and 4); When driving the CLK input directly and with any AC signal of 0.5 V (peak-to-peak value) imposed on a DC level of 1.5 V, sampling takes place on the LOW-to-HIGH transition of the clock signal. When driving the $\overline{CLK}$ input with such a signal, sampling takes place on the HIGH-to-LOW transition.
   d) If one of the clock inputs is not driven, then it is recommended to decouple this input to DGND with a 100 nF capacitor.

HANDLING

Inputs and outputs are protected against electrostatic discharges in normal handling. However, to be totally safe, it is desirable to take normal precautions appropriate to handling integrated circuits.

THERMAL RESISTANCE

SYMBOL	PARAMETER	VALUE	UNIT
$R_{th\ j\text{-}a}$	from junction to ambient in free air		
	SOT101-1	55	K/W
	SOT137-1	75	K/W

7110826 0107295 665

CHARACTERISTICS

$V_{CCA} = V_7 - V_3 = 4.5$ V to 5.5 V; $V_{CCD} = V_{18} - V_{20} = 4.5$ V to 5.5 V; $V_{CCO} = V_{19} - V_{20} = 4.5$ V to 5.5 V; AGND and DGND shorted together; $V_{CCA} - V_{CCD} = -0.5$ V to +0.5 V; $V_{CCO} - V_{CCD} = -0.5$ V to +0.5 V; $V_{CCA} - V_{CCD} = -0.5$ V to +0.5 V; $T_{amb} = 0$ °C to +70 °C; unless otherwise specified (typical values measured at $V_{CCA} = V_{CCD} = V_{CCO} = 5$ V and $T_{amb} = 25$ °C).

SYMBOL	PARAMETER	CONDITIONS	MIN.	TYP.	MAX.	UNIT
Supply						
V_{CCA}	analog supply voltage		4.5	5.0	5.5	V
V_{CCD}	digital supply voltage		4.5	5.0	5.5	V
V_{CCO}	output stages supply voltage		4.2	5.0	5.5	V
I_{CCA}	analog supply current		–	28	36	mA
I_{CCD}	digital supply current		–	19	25	mA
I_{CCO}	output stage supply current	all outputs LOW	–	11	14	mA
Inputs						
CLOCK INPUT $\overline{CLK}$ AND CLK (note 1; REFERENCED TO DGND)						
V_{IL}	LOW level input voltage		0	–	0.8	V
V_{IH}	HIGH level input voltage		2.0	–	V_{CCD}	V
I_{IL}	LOW level input current	$V_{CLK}/V_{\overline{CLK}} = 0.4$ V	–400	–	–	μA
I_{IH}	HIGH level input current	$V_{CLK}/V_{\overline{CLK}} = 0.4$ V	–	–	100	μA
		$V_{CLK}/V_{\overline{CLK}} = V_{CCD}$	–	–	300	μA
Z_i	input impedance	$f_{CLK}/f_{\overline{CLK}} = 10$ MHz	–	4	–	kΩ
C_i	input capacitance	$f_{CLK}/f_{\overline{CLK}} = 10$ MHz	–	4.5	–	pF
$V_{CLK} - V_{\overline{CLK}}$	AC input voltage for switching (peak-to-peak value)	note 1; DC level = 1.5 V	0.5	–	2.0	V
$\overline{TC}$ AND $\overline{CE}$ (REFERENCED TO DGND)						
V_{IL}	LOW level input voltage		0	–	0.8	V
V_{IH}	HIGH level input voltage		2.0	–	V_{CCD}	V
I_{IL}	LOW level input current	$V_{IL} = 0.4$ V	–400	–	–	μA
I_{IH}	HIGH level input current	$V_{IH} = 2.7$ V	–	–	20	μA
VI (ANALOG INPUT VOLTAGE REFERENCED TO AGND)						
$V_{VI(B)}$	input voltage (bottom)		1.33	1.41	1.48	V
$V_{VI(0)}$	input voltage	output code = 0	1.455	1.55	1.635	V
$V_{OS(B)}$	offset voltage (bottom)	$V_{VI(0)} - V_{VI(B)}$	0.125	–	0.155	V
$V_{VI(T)}$	input voltage (top)		3.2	3.36	3.5	V
$V_{VI(255)}$	input voltage	output code = 255	3.115	3.26	3.385	V
$V_{OS(T)}$	offset voltage (top)	$V_{VI(T)} - V_{VI(255)}$	0.085	–	0.115	V
$V_{VI(p-p)}$	input voltage amplitude (peak-to-peak value)		1.66	1.71	1.75	V
I_{IL}	LOW level input current	$V_{VI} = 1.4$ V	–	0	–	μA
I_{IH}	HIGH level input current	$V_{VI} = 3.6$ V	60	120	180	μA
Z_i	input impedance	$f_i = 1$ MHz	–	10	–	kΩ
C_i	input capacitance	$f_i = 1$ MHz	–	14	–	pF

SYMBOL	PARAMETER	CONDITIONS	MIN.	TYP.	MAX.	UNIT
Reference resistance						
R_{ref}	reference resistance	V_{RT} to V_{RB}	–	220	–	Ω
Outputs						
DIGITAL OUTPUTS (D7 - D0) (REFERENCED TO DGND)						
V_{OL}	LOW level output voltage	I_O = 1 mA	0	–	0.4	V
V_{OH}	HIGH level output voltage	I_O = –0.4 mA	2.7	–	V_{CCD}	V
I_{OZ}	output current in 3-state mode	0.4 V < V_O < V_{CCD}	–20	–	+20	μA
Switching characteristics (note 2; see Fig.3)						
$f_{CLK}/f_{\overline{CLK}}$	maximum clock frequency		40	–	–	MHz
Analog signal processing (f_{CLK} = 40 MHz)						
B	–3 dB bandwidth	note 3	–	19.5	–	MHz
G_d	differential gain	note 4	–	0.6	–	%
ϕ_d	differential phase	note 4	–	0.8	–	deg
f_1	fundamental harmonics (full-scale)	f_i = 4.43 MHz	–	–	0	dB
f_{all}	harmonics (full-scale), all components	f_i = 4.43 MHz	–	–55	–	dB
SVRR1	supply voltage ripple rejection	note 5	–	–28	–25	dB
SVRR2	supply voltage ripple rejection	note 5	–	1	2.5	%/V
Transfer function						
ILE	DC integral linearity error		–	–	±1	LSB
DLE	DC differential linearity error		–	–	±1/2	LSB
AILE	AC integral linearity error	note 6	–	–	±2	LSB
EB	effective bits	f_i = 4.43 MHz	–	7.1	–	bits
Timing (note 7; see Figs 3 to 6; **f_{CLK} = 40 MHz)**						
t_{dS}	sampling delay		–	–	2	ns
t_{HD}	output hold time		6	–	–	ns
t_{dLH}	output delay time	LOW-to-HIGH transition	–	8	10	ns
t_{dHL}	output delay time	HIGH-to-LOW transition	–	16	20	ns
t_{dZH}	3-state output delay times	enable-to-HIGH	–	19	25	ns
t_{dZL}	3-state output delay times	enable-to-LOW	–	16	20	ns
t_{dHZ}	3-state output delay times	disable-to-HIGH	–	14	20	ns
t_{dLZ}	3-state output delay times	disable-to-LOW	–	9	12	ns

7110826 0107297 438

Notes

1. The circuit has two clock inputs CLK and $\overline{CLK}$. There are four modes of operation:
   a) TTL (mode 1); $\overline{CLK}$ decoupled to DGND by a capacitor. CLK input is TTL threshold voltage of 1.5 V and sampling on the LOW-to-HIGH transition of the input clock signal.
   b) TTL (mode 2); CLK decoupled to DGND by a capacitor. $\overline{CLK}$ input is TTL threshold voltage of 1.5 V and sampling on the HIGH-to-LOW transition of the input clock signal.
   c) AC drive modes (modes 3 and 4); When driving the CLK input directly and with any AC signal of 0.5 V (peak-to-peak value) imposed on a DC level of 1.5 V, sampling takes place on the LOW-to-HIGH transition of the clock signal. When driving the $\overline{CLK}$ input with such a signal, sampling takes place on the HIGH-to-LOW transition.
   d) If one of the clock inputs is not driven, then it is recommended to decouple this input to DGND with a 100 nF capacitor.
2. In addition to a good layout of the digital and analog ground, it is recommended that the rise and fall times of the clock must not be less than 2 ns.
3. The –3 dB bandwidth is determined by the 3 dB reduction in the reconstructed output (full-scale signal at the input).
4. Low frequency ramp signal ($V_{VI(p-p)}$ = 1.8 V and f_i = 15 kHz) combined with a sinewave input voltage ($V_{VI(p-p)}$ = 0.5 V, f_i = 4.43 MHz) at the input.
5. Supply voltage ripple rejection:
   a) SVRR1; variation of the input voltage producing output code 127 for supply voltage variation of 1 V: SVRR1 = 20 log ($\Delta V_{VI(127)}$ / ΔV_{CCA})
   b) SVRR2; relative variation of the full-scale range of analog input for a supply voltage variation of 1 V: SVR2 = $\{\Delta(V_{VI(0)} - V_{VI(255)}) / (V_{VI(0)} - V_{VI(255)})\} \div \Delta V_{CCA}$.
6. Full-scale sinewave (f_i = 4.4 MHz; f_{CLK}; $f_{\overline{CLK}}$ = 27 MHz).
7. Output data acquisition:
   a) Output data is available after the maximum delay of t_{dHL} and t_{dLH}.

7110826 0107298 374

Table 1 Output coding and input voltage (referenced to AGND; typical values)

			BINARY OUTPUT BITS								TWO'S COMPLEMENT OUTPUT BITS							
STEP	$V_{VI(p-p)}$	O/UF	D7	D6	D5	D4	D3	D2	D1	D0	D7	D6	D5	D4	D3	D2	D1	D0
Underflow	<1.55	1	0	0	0	0	0	0	0	0	1	0	0	0	0	0	0	0
0	1.55	0	0	0	0	0	0	0	0	0	1	0	0	0	0	0	0	0
1	–	0	0	0	0	0	0	0	0	1	1	0	0	0	0	0	0	1
.	.	.	.	.	.	.	.	.	.	.	.	.	.	.	.	.	.	.
.	.	.	.	.	.	.	.	.	.	.	.	.	.	.	.	.	.	.
254	.	0	1	1	1	1	1	1	1	0	0	1	1	1	1	1	1	0
255	3.26	0	1	1	1	1	1	1	1	1	0	1	1	1	1	1	1	1
Overflow	>3.26	1	1	1	1	1	1	1	1	1	0	1	1	1	1	1	1	1

Table 2 Mode selection

$\overline{TC}$	$\overline{CE}$	D7-D0	O/UF
X(1)	1	high impedance	high impedance
0	0	active; two's complement	active
1	0	active; binary	active

Note

1. X = don't care.

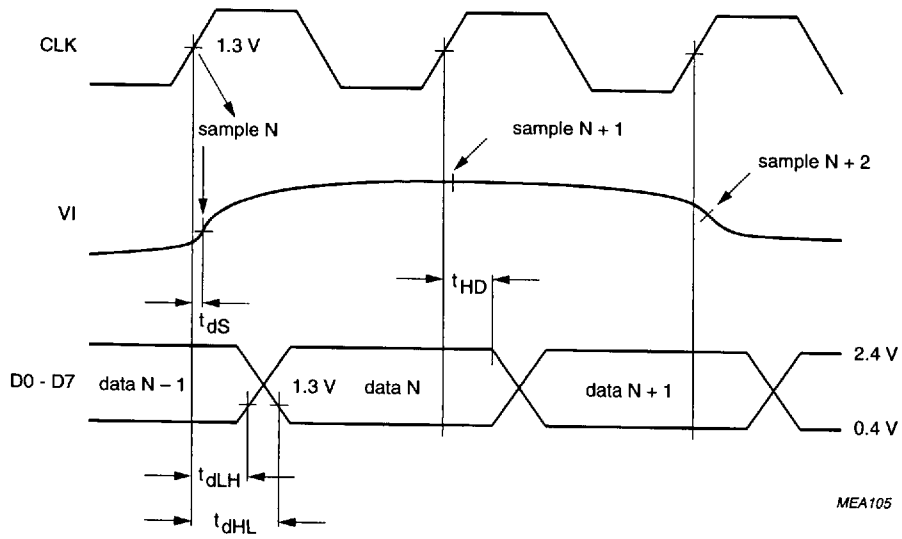

Fig.3 Timing diagram.

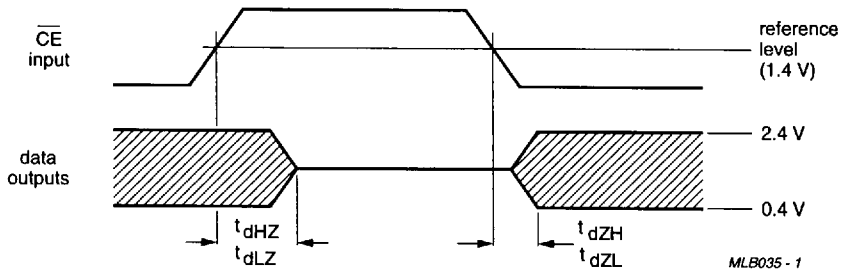

Fig.4 3-state delay timing diagram.

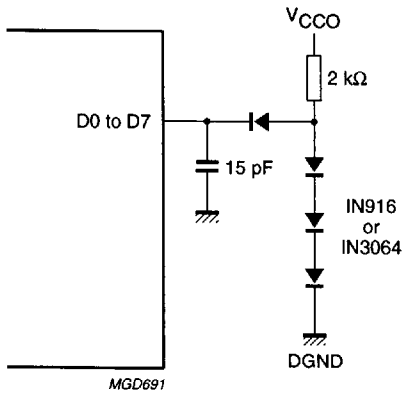

Fig.5 Load circuit for timing measurement; data outputs ($\overline{CE}$ = LOW).

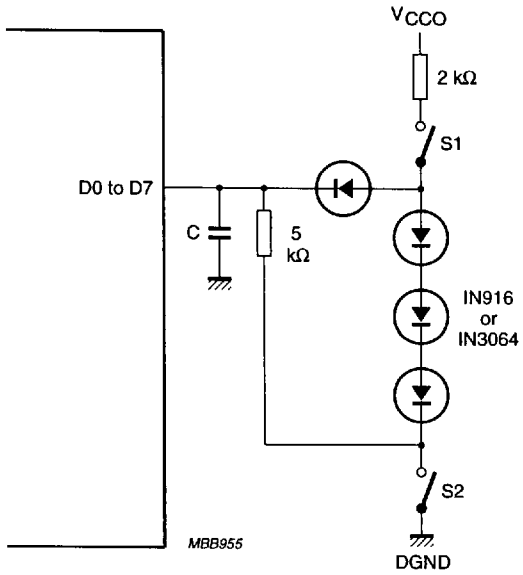

Fig.6 Load circuit for timing measurement; 3-state outputs ($\overline{CE}$: f_i = 1 MHz; V_{VI} = 3 V); see Table 3.

7110826 0107300 852

Table 3 Mode selection

TIMING MEASUREMENT	SWITCH S1	SWITCH S2	CAPACITOR
t_{dZH}	open	closed	15 pF
t_{dZL}	closed	open	15 pF
t_{dHZ}	closed	closed	5 pF
t_{dLZ}	closed	closed	5 pF

INTERNAL PIN CONFIGURATIONS

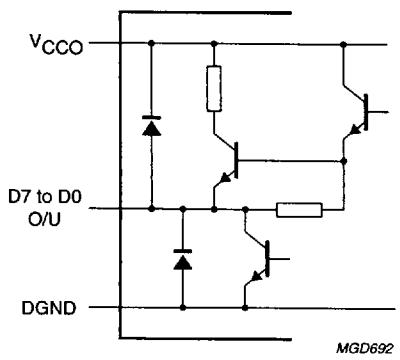

Fig.7 TTL data and overflow/underflow outputs.

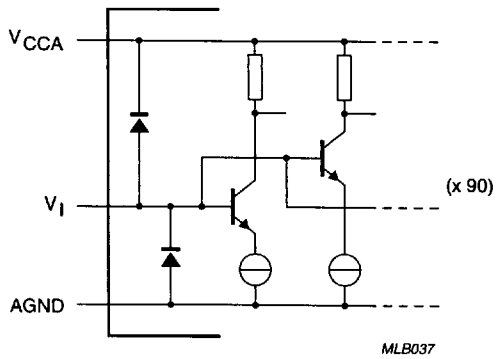

Fig.8 Analog inputs.

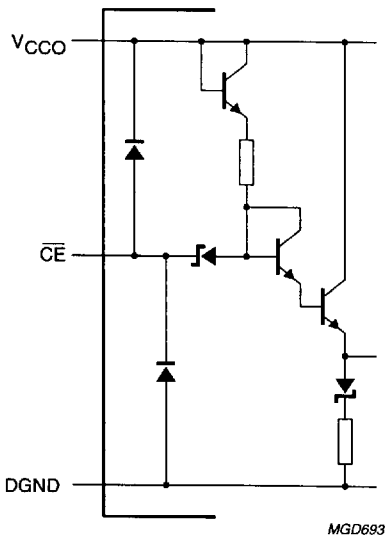

Fig.9 $\overline{CE}$ (3-state) input.

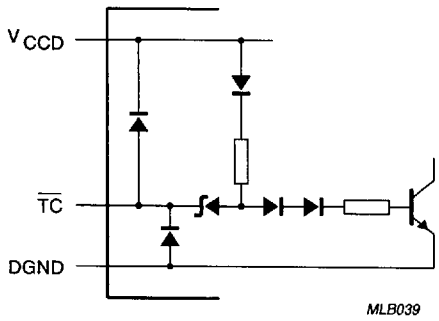

Fig.10 $\overline{TC}$ (two's complement) input.

7110826 0107301 799

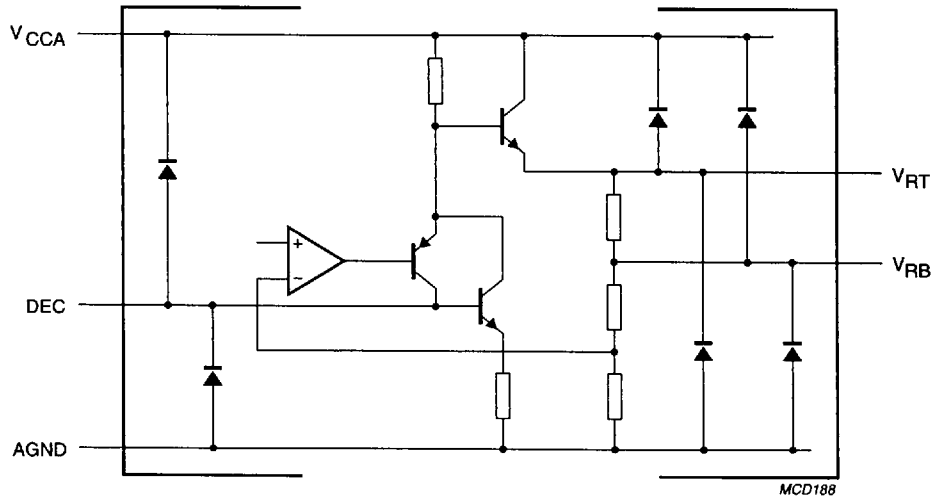

Fig.11 V_{RB}, V_{RT} and DEC.

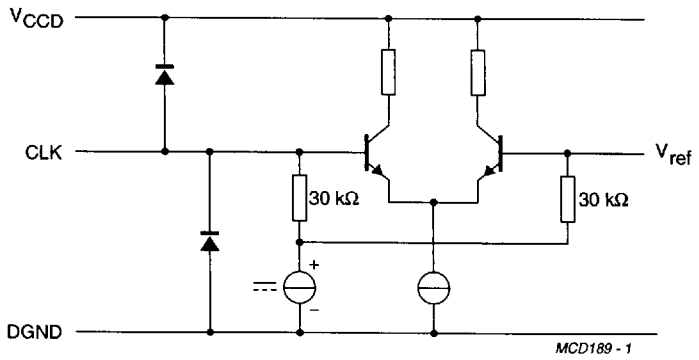

Fig.12 CLK and $\overline{CLK}$ inputs.

7110826 0107302 625

APPLICATION INFORMATION

Additional application information will be supplied upon request (please quote number FTV/8901).

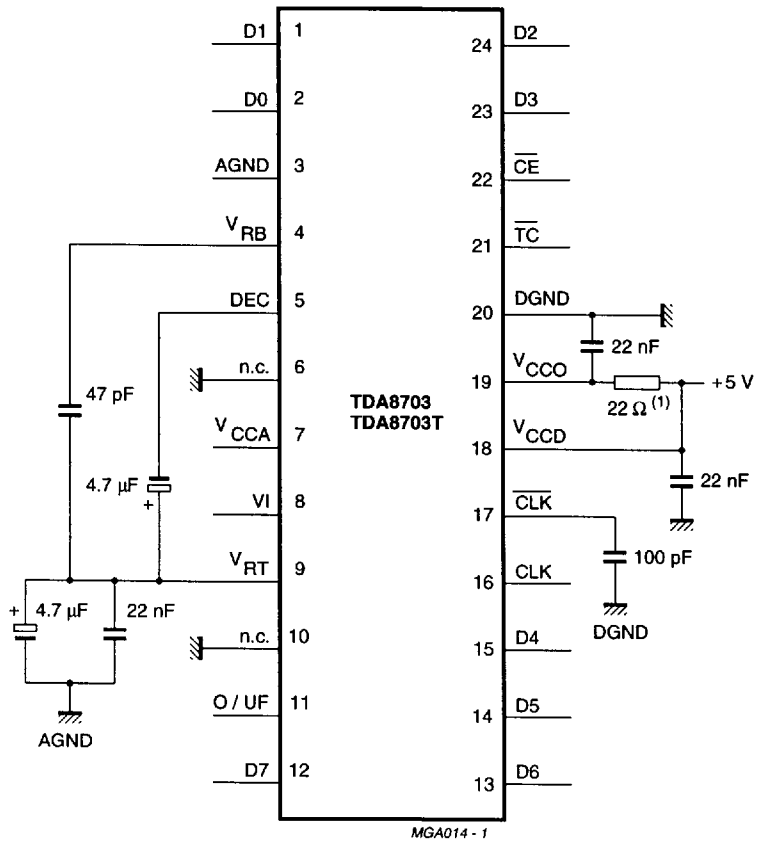

CLK should be decoupled to the DGND with a 100 nF capacitor, if a TTL signal is used on CLK (see Chapter "Characteristics", note 1).

CLK and $\overline{CLK}$ can be used in a differential mode (see Chapter "Characteristics", note 1).

V_{RB} and V_{RT} are decoupling pins for the internal reference ladder; do not draw current from these pins in order to achieve good linearity.

If it is required to use the TDA8703 in a parallel system configuration, the references (V_{RB} and V_{RT}) of each TDA8703 can be connected together. Code 0 will be identical and code 255 will remain in the 1 LSB variation for each TDA8703.

Analog and digital supplies should be separated and decoupled.

Pins 6 and 10 should be connected to AGND in order to prevent noise influence.

(1) It is recommended to decouple V_{CCO} through a 22 Ω resistor especially when the output data of the TDA8703 interfaces with a capacitive CMOS load device.

Fig.13 Application diagram.

7110826 0107303 561

PACKAGE OUTLINES

DIP24: plastic dual in-line package; 24 leads (600 mil) SOT101-1

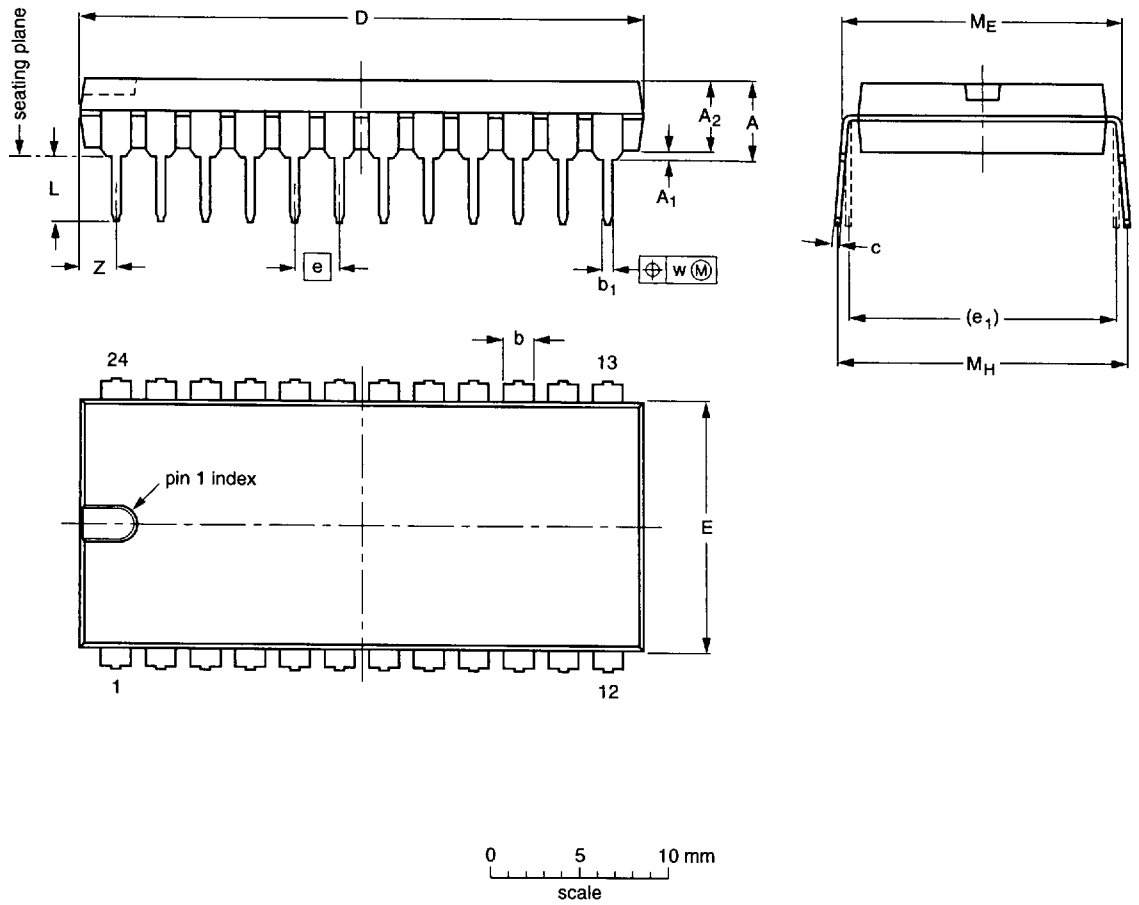

DIMENSIONS (inch dimensions are derived from the original mm dimensions)

UNIT	A max.	A_1 min.	A_2 max.	b	b_1	c	D (1)	E (1)	e	e_1	L	M_E	M_H	w	Z (1) max.
mm	5.1	0.51	4.0	1.7 1.3	0.53 0.38	0.32 0.23	32.0 31.4	14.1 13.7	2.54	15.24	3.9 3.4	15.80 15.24	17.15 15.90	0.25	2.2
inches	0.20	0.020	0.16	0.066 0.051	0.021 0.015	0.013 0.009	1.26 1.24	0.56 0.54	0.10	0.60	0.15 0.13	0.62 0.60	0.68 0.63	0.01	0.087

Note

1. Plastic or metal protrusions of 0.25 mm maximum per side are not included.

OUTLINE VERSION	REFERENCES				EUROPEAN PROJECTION	ISSUE DATE
	IEC	JEDEC	EIAJ			
SOT101-1	051G02	MO-015AD				~~92-11-17~~ 95-01-23

7110826 0107304 4T8

SO24: plastic small outline package; 24 leads; body width 7.5 mm **SOT137-1**

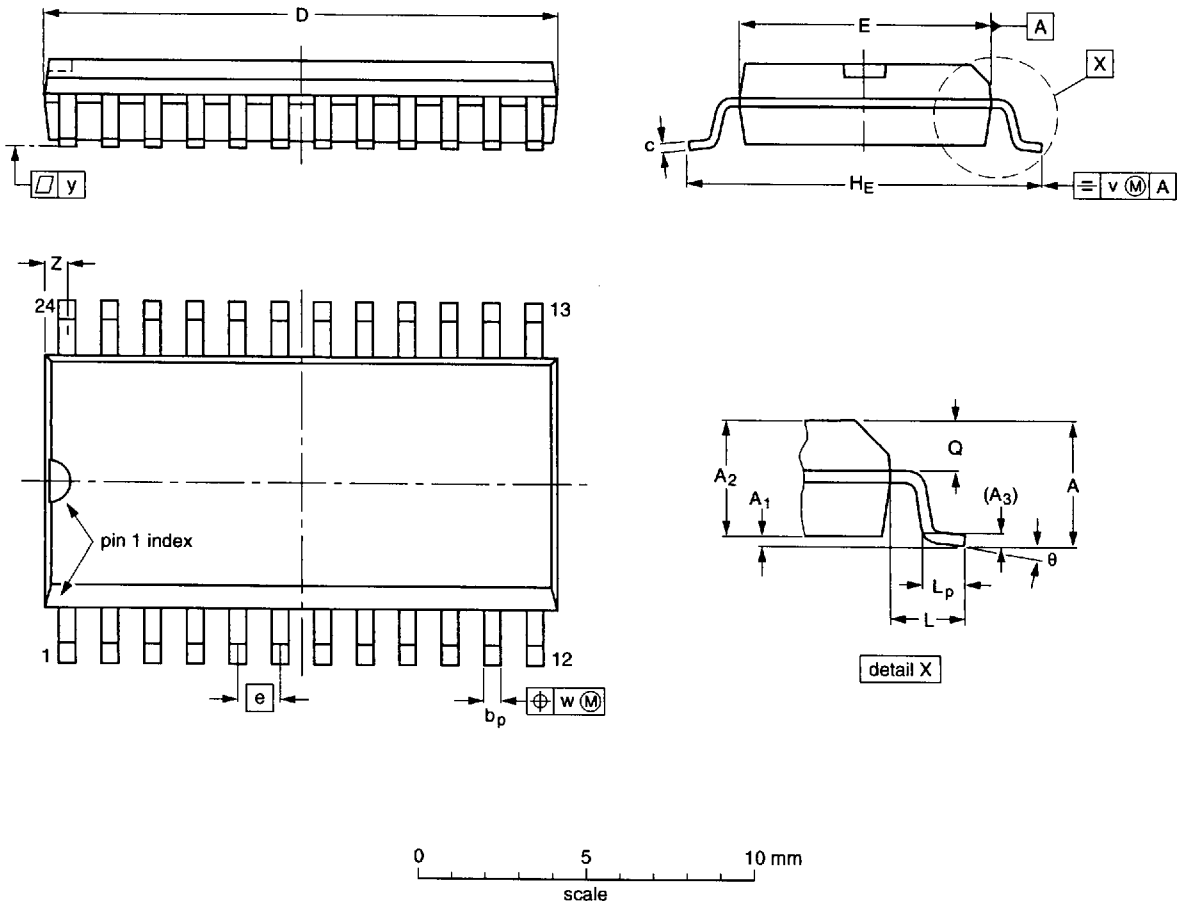

DIMENSIONS (inch dimensions are derived from the original mm dimensions)

UNIT	A max.	A_1	A_2	A_3	b_p	c	D(1)	E(1)	e	H_E	L	L_p	Q	v	w	y	Z(1)	θ
mm	2.65	0.30 0.10	2.45 2.25	0.25	0.49 0.36	0.32 0.23	15.6 15.2	7.6 7.4	1.27	10.65 10.00	1.4	1.1 0.4	1.1 1.0	0.25	0.25	0.1	0.9 0.4	8° 0°
inches	0.10	0.012 0.004	0.096 0.089	0.01	0.019 0.014	0.013 0.009	0.61 0.60	0.30 0.29	0.050	0.42 0.39	0.055	0.043 0.016	0.043 0.039	0.01	0.01	0.004	0.035 0.016	

Note

1. Plastic or metal protrusions of 0.15 mm maximum per side are not included.

OUTLINE VERSION	REFERENCES				EUROPEAN PROJECTION	ISSUE DATE
	IEC	JEDEC	EIAJ			
SOT137-1	075E05	MS-013AD				~~92-11-17~~ 95-01-24

7110826 0107305 334

SOLDERING

Introduction

There is no soldering method that is ideal for all IC packages. Wave soldering is often preferred when through-hole and surface mounted components are mixed on one printed-circuit board. However, wave soldering is not always suitable for surface mounted ICs, or for printed-circuits with high population densities. In these situations reflow soldering is often used.

This text gives a very brief insight to a complex technology. A more in-depth account of soldering ICs can be found in our *"IC Package Databook"* (order code 9398 652 90011).

DIP

SOLDERING BY DIPPING OR BY WAVE

The maximum permissible temperature of the solder is 260 °C; solder at this temperature must not be in contact with the joint for more than 5 seconds. The total contact time of successive solder waves must not exceed 5 seconds.

The device may be mounted up to the seating plane, but the temperature of the plastic body must not exceed the specified maximum storage temperature ($T_{stg\ max}$). If the printed-circuit board has been pre-heated, forced cooling may be necessary immediately after soldering to keep the temperature within the permissible limit.

REPAIRING SOLDERED JOINTS

Apply a low voltage soldering iron (less than 24 V) to the lead(s) of the package, below the seating plane or not more than 2 mm above it. If the temperature of the soldering iron bit is less than 300 °C it may remain in contact for up to 10 seconds. If the bit temperature is between 300 and 400 °C, contact may be up to 5 seconds.

SO

REFLOW SOLDERING

Reflow soldering techniques are suitable for all SO packages.

Reflow soldering requires solder paste (a suspension of fine solder particles, flux and binding agent) to be applied to the printed-circuit board by screen printing, stencilling or pressure-syringe dispensing before package placement.

Several techniques exist for reflowing; for example, thermal conduction by heated belt. Dwell times vary between 50 and 300 seconds depending on heating method. Typical reflow temperatures range from 215 to 250 °C.

Preheating is necessary to dry the paste and evaporate the binding agent. Preheating duration: 45 minutes at 45 °C.

WAVE SOLDERING

Wave soldering techniques can be used for all SO packages if the following conditions are observed:

- A double-wave (a turbulent wave with high upward pressure followed by a smooth laminar wave) soldering technique should be used.
- The longitudinal axis of the package footprint must be parallel to the solder flow.
- The package footprint must incorporate solder thieves at the downstream end.

During placement and before soldering, the package must be fixed with a droplet of adhesive. The adhesive can be applied by screen printing, pin transfer or syringe dispensing. The package can be soldered after the adhesive is cured.

Maximum permissible solder temperature is 260 °C, and maximum duration of package immersion in solder is 10 seconds, if cooled to less than 150 °C within 6 seconds. Typical dwell time is 4 seconds at 250 °C.

A mildly-activated flux will eliminate the need for removal of corrosive residues in most applications.

REPAIRING SOLDERED JOINTS

Fix the component by first soldering two diagonally-opposite end leads. Use only a low voltage soldering iron (less than 24 V) applied to the flat part of the lead. Contact time must be limited to 10 seconds at up to 300 °C. When using a dedicated tool, all other leads can be soldered in one operation within 2 to 5 seconds between 270 and 320 °C.

7110826 0107306 270