National Semiconductor

DM54/74LS471 (256 x 8) 2048-Bit TTL PROM

General Description

These Schottky memories are organized in the popular 256 words by 8 bits configuration. Memory enable inputs are provided to control the output states. When the device is enabled, the outputs represent the contents of the selected word. When disabled, the 8 outputs go to the "OFF" or high impedance state.

PROMs are shipped from the factory with lows in all locations. A high may be programmed into any selected location by following the programming instructions.

Features

- Advanced titanium-tungsten (Ti-W) fuses
- Schottky-clamped for high speed
  - Address access down to—60 ns max
  - Enable access—30 ns max
  - Enable recovery—30 ns max
- PNP inputs for reduced input loading
- All DC and AC parameters guaranteed over temperature
- Low voltage TRI-SAFE™ programming
- TRI-STATE® outputs

Block Diagram

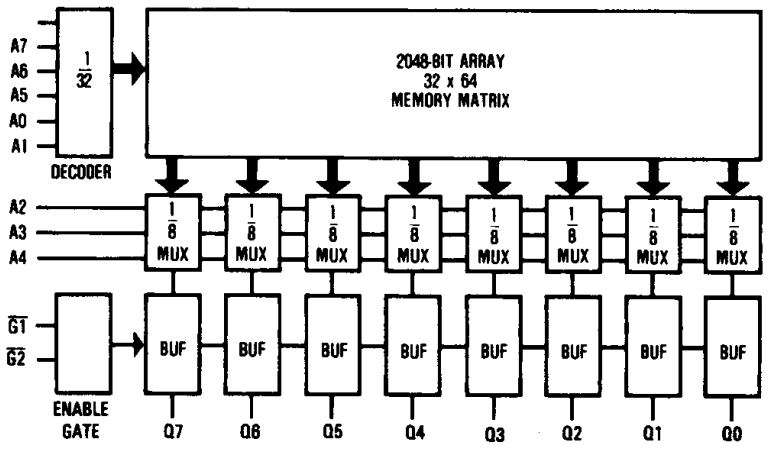

TL/D/9190-1

Pin Names

A0–A7	Addresses
$\overline{G1}$–$\overline{G2}$	Output Enables
GND	Ground
Q0–Q7	Outputs
V_{CC}	Power Supply

Connection Diagrams

Dual-In-Line Package

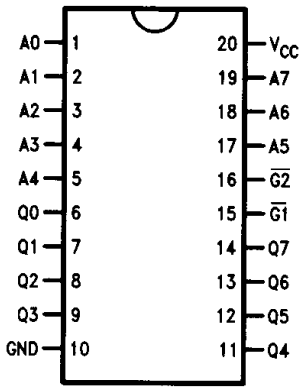

TL/D/9190–2

Top View

Order Number DM54/74LS471J or DM74LS471N
See NS Package Number J20A or N20A

Plastic Leaded Chip Carrier (PLCC)

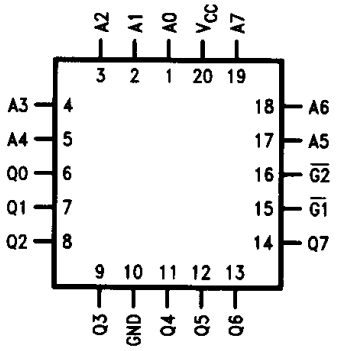

TL/D/9190–3

Top View

Order Number DM74LS471V
See NS Package Number V20A

Ordering Information

Commercial Temp Range (0°C to +70°C)

Parameter/Order Number	Max Access Time (ns)
DM74LS471N	60
DM74LS471J	60
DM74LS471V	60

Military Temp Range (−55°C to +125°C)

Parameter/Order Number	Max Access Time (ns)
DM54LS471J	70

Absolute Maximum Ratings (Note 1)

If Military/Aerospace specified devices are required, please contact the National Semiconductor Sales Office/Distributors for availability and specifications.

Supply Voltage (Note 2)	−0.5V to +7.0V
Input Voltage (Note 2)	−1.2V to +5.5V
Output Voltage (Note 2)	−0.5V to +5.5V
Storage Temperature	−65°C to +150°C
Lead Temp. (Soldering, 10 seconds)	300°C
ESD to be determined	

Note 1: Absolute maximum ratings are those values beyond which the device may be permanently damaged. They do not mean that the device may be operated at these values.

Note 2: These limits do not apply during programming ratings, refer to the programming instructions.

Operating Conditions

	Min	Max	Units
Supply Voltage (V_{CC})			
Military	4.50	5.50	V
Commercial	4.75	5.25	V
Ambient Temperature (T_A)			
Military	−55	+125	°C
Commercial	0	+70	°C
Logical "0" Input Voltage	0	0.8	V
Logical "1" Input Voltage	2.0	5.5	V

DC Electrical Characteristics (Note 1)

Symbol	Parameter	Conditions	DM54LS471			DM74LS471			Units
			Min	Typ	Max	Min	Typ	Max	
I_{IL}	Input Load Current	V_{CC} = Max, V_{IN} = 0.45V		−80	−250		−80	−250	μA
I_{IH}	Input Leakage Current	V_{CC} = Max, V_{IN} = 2.7V			25			25	μA
		V_{CC} = Max, V_{IN} = 5.5V			1.0			1.0	mA
V_{OL}	Low Level Output Voltage	V_{CC} = Min, I_{OL} = 16 mA		0.35	0.50		0.35	0.45	V
V_{IL}	Low Level Input Voltage				0.80			0.80	V
V_{IH}	High Level Input Voltage		2.0			2.0			V
V_C	Input Clamp Voltage	V_{CC} = Min, I_{IN} = −18 mA		−0.8	−1.2		−0.8	−1.2	V
C_I	Input Capacitance	V_{CC} = 5.0V, V_{IN} = 2.0V T_A = 25°C, 1 MHz		4.0			4.0		pF
C_O	Output Capacitance	V_{CC} = 5.0V, V_O = 2.0V T_A = 25°C, 1 MHz, Outputs Off		6.0			6.0		pF
I_{CC}	Power Supply Current	V_{CC} = Max, Inputs Grounded All Outputs Open		75	100		75	100	mA
I_{OS}	Short Circuit Output Current	V_O = 0V, V_{CC} = Max (Note 2)	−20		−70	−20		−70	mA
I_{OZ}	Output Leakage (TRI-STATE)	V_{CC} = Max, V_O = 0.45V to 2.4V Chip Disabled			+50			+50	μA
					−50			−50	μA
V_{OH}	Output Voltage High	I_{OH} = −2.0 mA	2.4	3.2					V
		I_{OH} = − 6.5 mA				2.4	3.2		V

Note 1: These limits apply over the entire operating range unless stated otherwise. All typical values are for V_{CC} = 5.0v and T_A = 25°C.

Note 2: During I_{OS} measurement, only one output at a time should be grounded. Permanent damage may otherwise result.

AC Electrical Characteristics with Standard Load and Operating Conditions

Symbol	JEDEC Symbol	Parameter	DM54LS471			DM74LS471			Units
			Min	Typ	Max	Min	Typ	Max	
TAA	TAVQV	Address Access Time		45	70		40	60	ns
TEA	TEVQV	Enable Access Time		15	35		15	30	ns
TER	TEXQX	Enable Recovery Time		15	35		15	30	ns
TZX	TEVQX	Output Enable Time		15	35		15	30	ns
TXZ	TEXQZ	Output Disable Time		15	35		15	30	ns

Functional Description

TESTABILITY

The Schottky PROM die includes extra rows and columns of fusable links for testing the programmability of each chip. These test fuses are placed at the worst-case chip locations to provide the highest possible confidence in the programming tests in the final product. A ROM pattern is also permanently fixed in the additional circuitry and coded to provide a parity check of input address levels. These and other test circuits are used to test for correct operation of the row and column-select circuits and functionality of input and enable gates. All test circuits are available at both wafer and assembled device levels to allow 100% functional and parametric testing at every stage of the test flow.

RELIABILITY

As with all National products, the Ti-W PROMs are subjected to an on-going reliability evaluation by the Reliability Assurance Department. These evaluations employ accelerated life tests, including dynamic high-temperature operating life, temperature-humidity life, temperature cycling, and thermal shock. To date, nearly 7.4 million Schottky Ti-W PROM device hours have been logged, with samples in Epoxy B molded DIP (N-package), PLCC (V-package) and CERDIP (J-package). Device performance in all package configurations is excellent.

TITANIUM-TUNGSTEN FUSES

National's Programmable Read-Only Memories (PROMs) feature titanium-tungsten (Ti-W) fuse links designed to program efficiently with only 10.5V applied. The high performance and reliability of these PROMs are the result of fabrication by a Schottky bipolar process, of which the titanium-tungsten metallization is an integral part, and the use of an on-chip programming circuit.

A major advantage of the titanium-tungsten fuse technology is the low programming voltage of the fuse links. At 10.5V, this virtually eliminates the need for guard-ring devices and wide spacings required for other fuse technologies. Care is taken, however, to minimize voltage drops across the die and to reduce parasitics. The device is designed to ensure that worst-case fuse operating current is low enough for reliable long-term operation. The Darlington programming circuit is liberally designed to insure adequate power density for blowing the fuse links. The complete circuit design is optimized to provide high performance over the entire operating ranges of V_{CC} and temperature.