LTC1049

Low Power Chopper Stabilized Operational Amplifier with Internal Capacitors

FEATURES

- Low Supply Current 200μA
- No External Components Required
- Maximum Offset Voltage 10μV
- Maximum Offset Voltage Drift 0.1μV/°C
- Single Supply Operation 4.75V to 16V
- Input Common Mode Range Includes Ground
- Output Swings to Ground
- Typical Overload Recovery Time 6ms

APPLICATIONS

- 4mA-20mA Current Loops
- Thermocouple Amplifiers
- Electronic Scales
- Medical Instrumentation
- Strain Gauge Amplifiers
- High Resolution Data Acquisition

DESCRIPTION

The LTC1049 is a high performance, low power chopper stabilized operational amplifier. The two sample-and-hold capacitors usually required externally by other chopper stabilized amplifiers are integrated on the chip. Further, the LTC1049 offers superior DC and AC performance with a nominal supply current of only 200μA.

The LTC1049 has a typical offset voltage of 0.5μV, with drift of 0.01μV/°C, 0.1Hz to 10Hz input noise voltage of 3μVp-p and typical voltage gain of 160dB. The slew rate is 0.8V/μs with a gain bandwidth product of 0.8MHz.

Overload recovery time from a saturation condition is 6ms, a significant improvement over chopper amplifiers using external capacitors.

The LTC1049 is available in a standard 8-pin metal can, plastic and ceramic dual in line packages as well as an 8-pin SO package. The LTC1049 can be a plug-in replacement for most standard op amps with improved DC performance and substantial power savings.

TYPICAL APPLICATION

Single Supply Thermocouple Amplifier

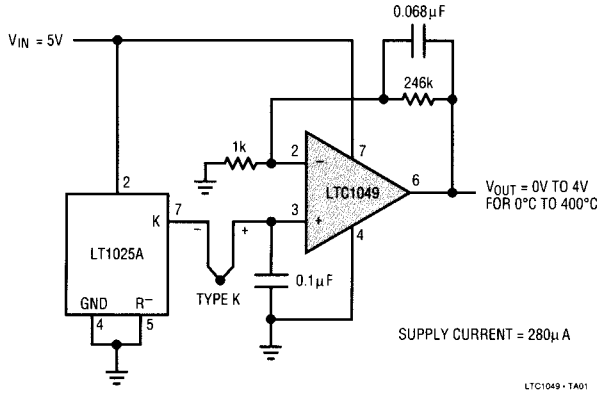

ABSOLUTE MAXIMUM RATINGS
(Note 1)

Total Supply Voltage (V^+ to V^-) 18V
Input Voltage (Note 2) ..... (V^+ + 0.3V) to (V^- –0.3V)
Output Short Circuit Duration ..... Indefinite
Operating Temperature Range
  LTC1049C ..... –40°C to 85°C
Storage Temperature Range ..... –65°C to 150°C
Lead Temperature (Soldering, 10 sec.) ..... 300°C

PACKAGE/ORDER INFORMATION

	ORDER PART NUMBER
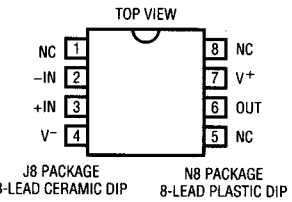	LTC1049CJ8 LTC1049CN8
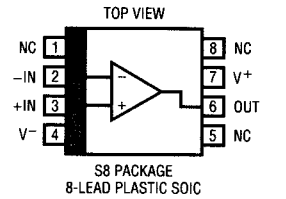	LTC1049CS8

ELECTRICAL CHARACTERISTICS
V_S = ±5V, T_A = operating temperature range, unless otherwise specified.

PARAMETER	CONDITIONS		LTC1049C MIN	TYP	MAX	UNITS
Input Offset Voltage	T_A=25°C(Note 3)			±2	±10	µV
Average Input Offset Drift	(Note 3)	●		±0.02	±0.1	µV/°C
Long Term Offset Voltage Drift				50		nV/√mo
Input Offset Current	T_A= 25°C			±30	±100	pA
		●			±150	
Input Bias Current	T_A= 25°C			±15	±50	pA
		●			±150	
Input Noise Voltage	0.1Hz to 10Hz			3.0		µVp-p
	0.1Hz to 1Hz			1.0		
Input Noise Current	f=10Hz (Note 4)			2.0		fA/√Hz
Common Mode Rejection Ratio	V_{CM}= V^- to 2.7V	●	110	130		dB
Power Supply Rejection Ratio	V_S= ±2.375V to ±8V	●	110	130		dB
Large Signal Voltage Gain	R_L=100kΩ,V_{OUT}= ±4.9V	●	130	160		dB
Maximum Output Voltage Swing	R_L=10kΩ T_A=25°C			–4.9/+4.2		V
		●	–4.6/+3.2			
	R_L=100kΩ	●	±4.9	±4.97		
Slew Rate	R_L=10kΩ, C_L=50pF			0.8		V/µs
Gain Bandwidth Product				0.8		MHz
Supply Current	No Load T_A=25°C			200	300	µA
		●			450	
Internal Sampling Frequency				700		Hz

The ● denotes the specifications which apply over the full operating temperature range.

Note 1: Absolute Maximum Ratings are those values beyond which the life of the device may be impaired.

Note 2: Connecting any terminal to voltages greater than V^+ or less than V^- may cause destructive latch-up. It is recommended that no sources operating from external supplies be applied prior to power-up of the LTC1049.

Note 3: These parameters are guaranteed by design. Thermocouple effects preclude measurement of these voltage levels in high speed automatic test systems. V_{OS} is measured to a limit determined by test equipment capability.

Note 4: Current Noise is calculated from the formula:

$$I_N = \sqrt{(2q \bullet 1b)}$$

where $q = 1.6 \times 10^{-19}$ Coulomb.

TEST CIRCUITS

Electrical Characteristics Test Circuit

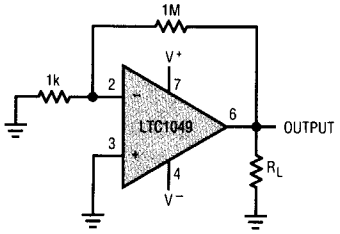

LTC1049 • TC01

DC to 10Hz and DC to 1Hz Noise Test Circuit

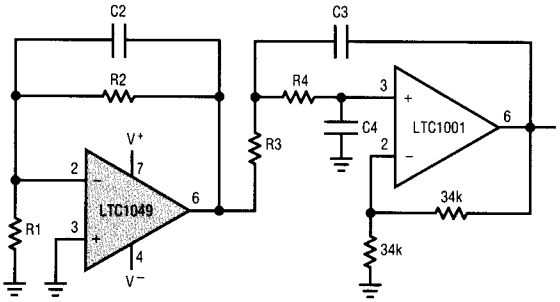

BANDWIDTH	R1	R2	R3	R4	C2	C3	C4
10Hz	16.2Ω	162k	16.2k	16.2Ω	0.1μF	1.0μF	1.0μF
1Hz	16.2Ω	162k	162k	162k	1.0μF	1.0μF	1.0μF

LTC1049 • TC02

TYPICAL PERFORMANCE CHARACTERISTICS

Voltage Noise vs Frequency

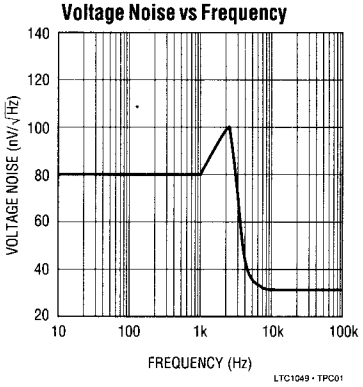

Common Mode Input Range vs Supply Voltage

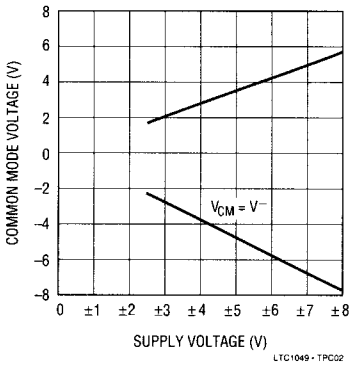

Gain/Phase vs Frequency

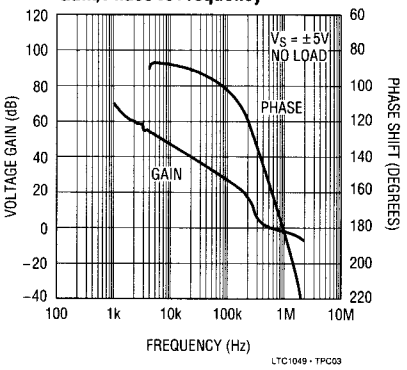

Supply Current vs Supply Voltage

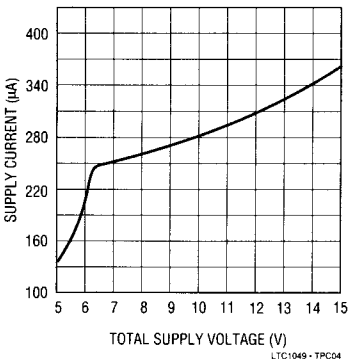

Supply Current vs Temperature

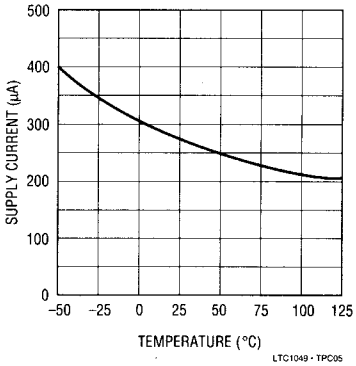

Output Short Circuit Current vs Supply Voltage

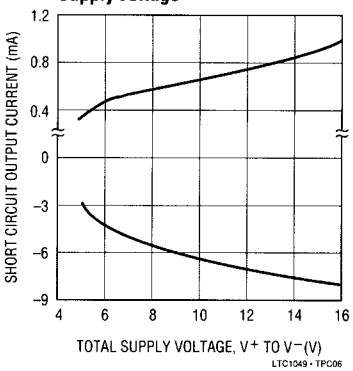

Sampling Frequency vs Supply Voltage

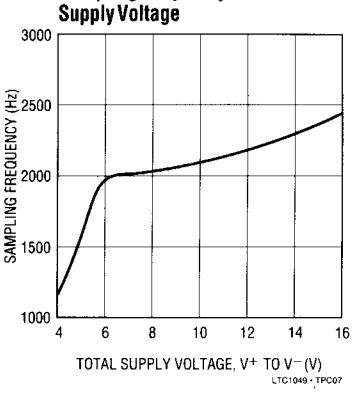

Sampling Frequency vs Temperature

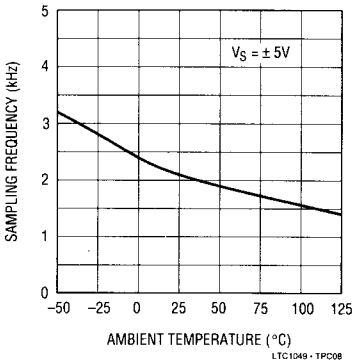

CMRR vs Frequency

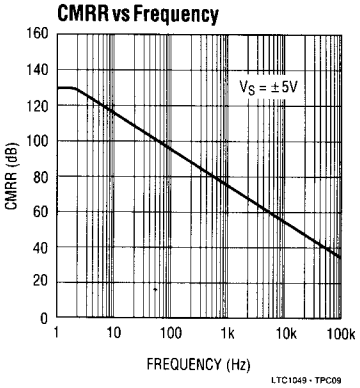

TYPICAL PERFORMANCE CHARACTERISTICS

Overload Recovery

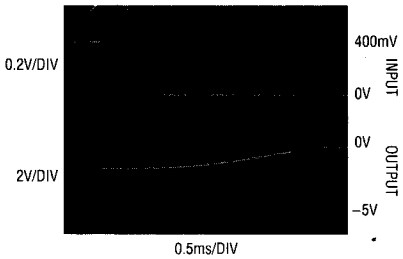

0.5ms/DIV
$A_V = -100$, $V_S = \pm 5V$

LTC1049 • TPC10

Small Signal Transient Response

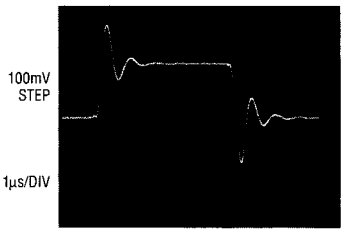

$A_V = +1$, $R_L = 10k$, $C_L = 50pF$, $V_S = \pm 5V$

LTC1049 • TPC11

Large Signal Transient Response

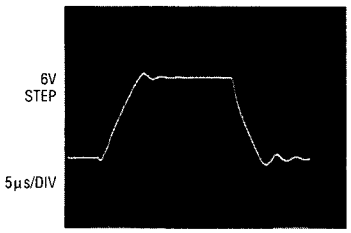

$A_V = +1$, $R_L = 10k$, $C_L = 50pF$, $V_S = \pm 5V$

LTC1049 • TPC12

LTC1049 DC to 1Hz Noise

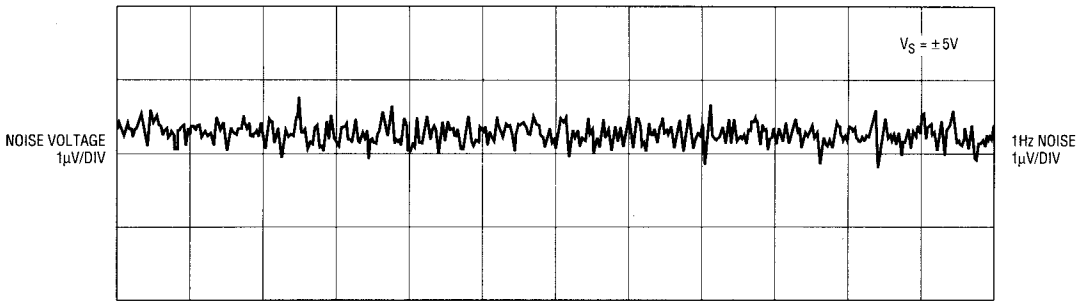

LTC1049 • TPC13

LTC1049 DC to 10Hz Noise

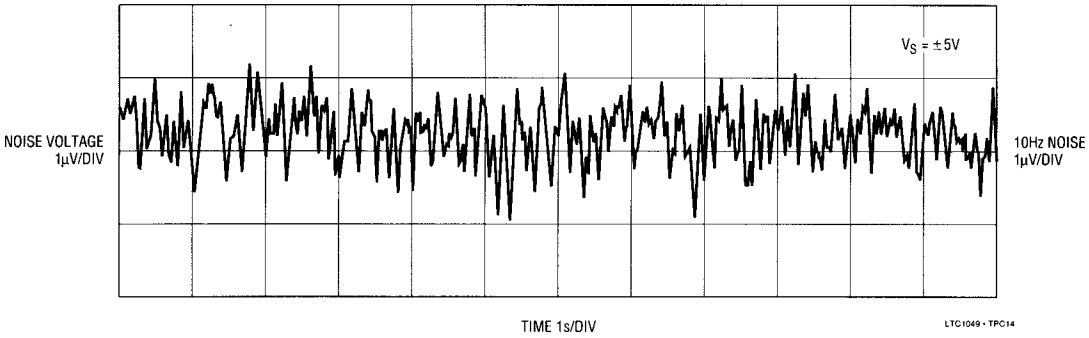

LTC1049 • TPC14

APPLICATIONS INFORMATION

ACHIEVING PICOAMPERE/MICROVOLT PERFORMANCE

Picoamperes

In order to realize the picoampere level of accuracy of the LTC1049, proper care must be exercised. Leakage currents in circuitry external to the amplifier can significantly degrade performance. High quality insulation should be used (e.g., Teflon, Kel-F); cleaning of all insulating surfaces to remove fluxes and other residues will probably be necessary — particularly for high temperature performance. Surface coating may be necessary to provide a moisture barrier in high humidity environments.

Board leakage can be minimized by encircling the input connections with a guard ring operated at a potential close to that of the inputs: in inverting configurations the guard ring should be tied to ground; in non-inverting connections to the inverting input. Guarding both sides of the printed circuit board is required. Bulk leakage reduction depends on the guard ring width.

Microvolts

Thermocouple effects must be considered if the LTC1049's ultra low drift is to be fully utilized. Any connection of dissimilar metals forms a thermoelectric junction producing an electric potential which varies with temperature (Seebeck effect). As temperature sensors, thermocouples exploit this phenomenon to produce useful information. In low drift amplifier circuits the effect is a primary source of error.

Connectors, switches, relay contacts, sockets, resistors, solder, and even copper wire are all candidates for thermal EMF generation. Junctions of copper wire from different manufacturers can generate thermal EMFs of 200nV/°C — twice the maximum drift specification of the LTC1049. The copper/kovar junction, formed when wire or printed circuit traces contact a package lead, has a thermal EMF of approximately 35μV/°C — 300 times the maximum drift specification of the LTC1049.

Minimizing thermal EMF-induced errors is possible if judicious attention is given to circuit board layout and component selection. It is good practice to minimize the number of junctions in the amplifier's input signal path. Avoid connectors, sockets, switches, and relays where possible. In instances where this is not possible, attempt to balance the number and type of junctions so that differential cancellation occurs. Doing this may involve deliberately introducing junctions to offset unavoidable junctions.

PACKAGE-INDUCED OFFSET VOLTAGE

Package-induced thermal EMF effects are another important source of errors. It arises at the copper/kovar junctions formed when wire or printed circuit traces contact a package lead. Like all the previously mentioned thermal EMF effects, it is outside the LTC1049's offset nulling loop and cannot be cancelled. The input offset voltage specification of the LTC1049 is actually set by the package-induced warm-up drift rather than by the circuit itself. The thermal time constant ranges from 0.5 to 3 minutes, depending on package type.

LOW SUPPLY OPERATION

The minimum supply for proper operation of the LTC1049 is typically below 4.0V (±2.0V). In single supply applications, PSRR is guaranteed down to 4.7V (±2.35V) to ensure proper operation down to the minimum TTL specified voltage of 4.75V.

PIN COMPATIBILITY

The LTC1049 is pin compatible with the 8-pin versions of 7650, 7652 and other chopper-stabilized amplifiers. The 7650 and 7652 require the use of two external capacitors connected to pin 1 and 8 which are not needed for the LTC1049. Pins 1, 5, and 8 of the LTC1049 are not connected internally; thus the LTC1049 can be a direct plug in for the 7650 and 7652 even if the two capacitors are left on the circuit board.

TYPICAL APPLICATIONS

Low Power, Low Hold Step Sample and Hold

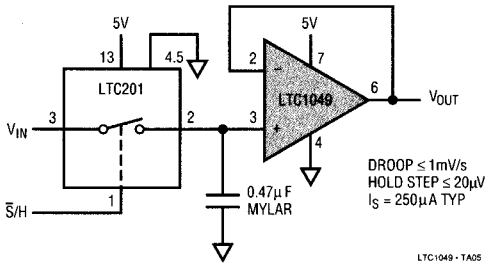

Low Power, Single Supply, Low Offset Instrumentation Amp

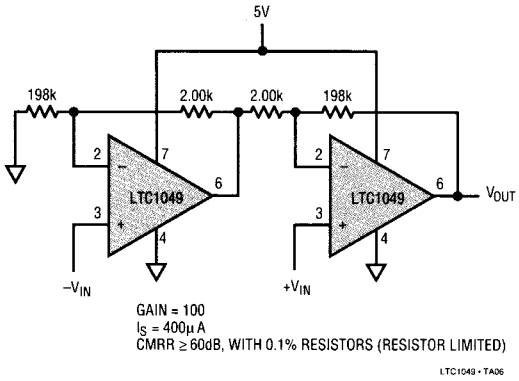

Thermocouple Based Temperature to Frequency Converter

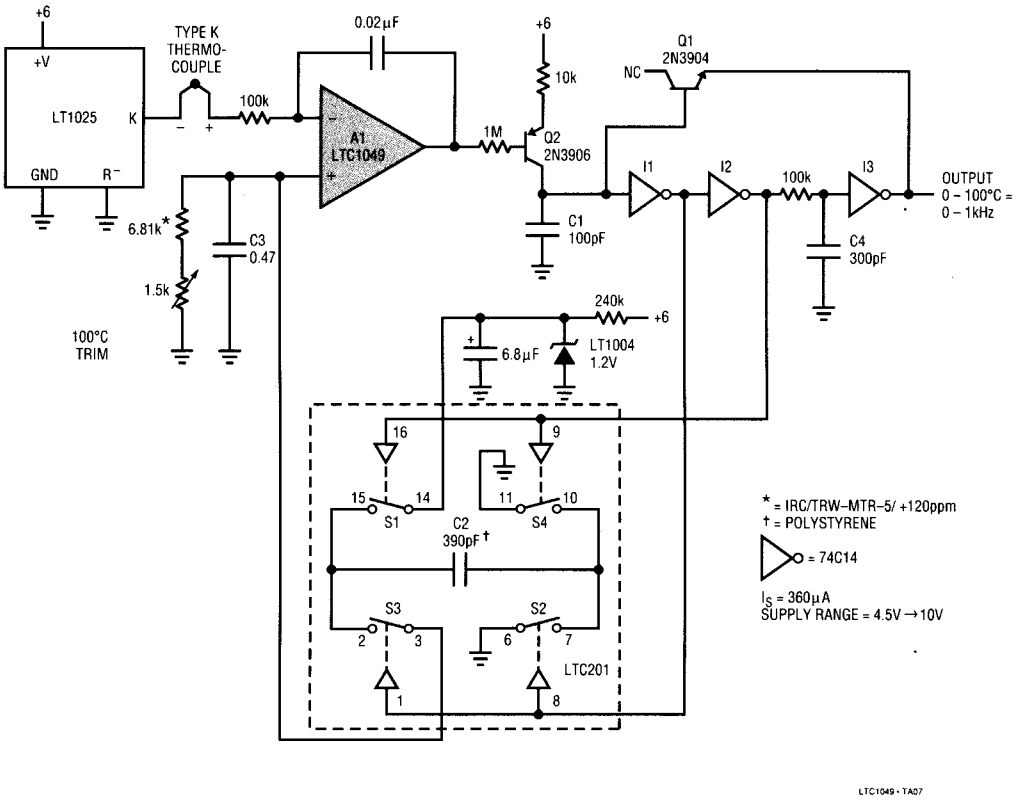

Information furnished by Linear Technology Corporation is believed to be accurate and reliable. However, no responsibility is assumed for its use. Linear Technology Corporation makes no representation that the interconnection of its circuits as described herein will not infringe on existing patent rights.

PACKAGE DESCRIPTION Dimensions in inches (millimeters) unless otherwise noted.

J8 Package
8-Lead Ceramic DIP

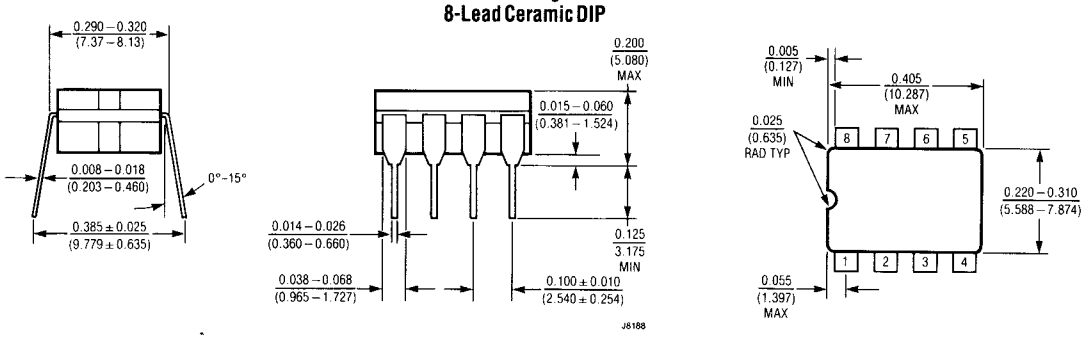

$T_{J\,MAX}$	θ_{JA}
150°C	100°C/W

N8 Package
8-Lead Plastic DIP

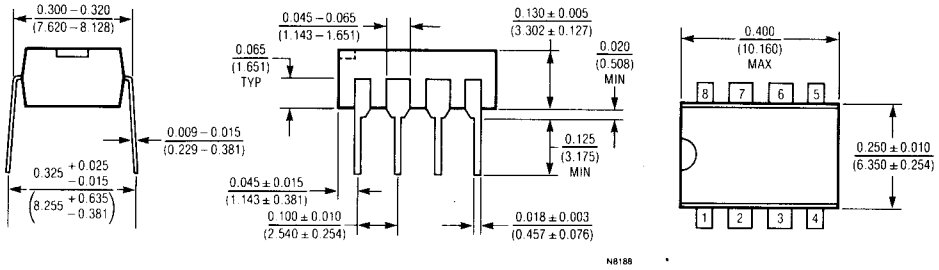

$T_{J\,MAX}$	θ_{JA}
110°C	130°C/W

S8 Package
8-Lead Plastic SOIC

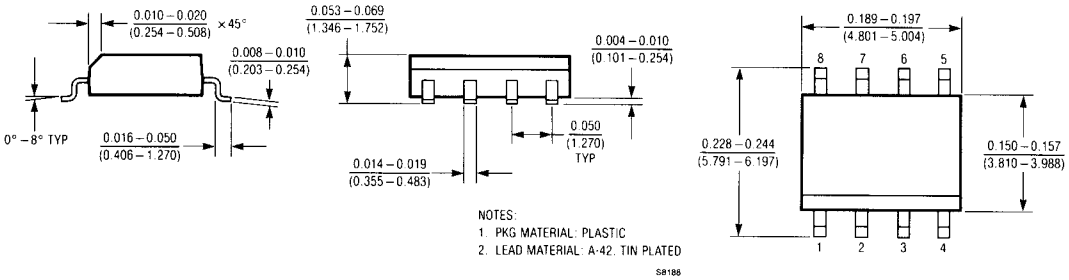

NOTES:
1. PKG MATERIAL: PLASTIC
2. LEAD MATERIAL: A-42, TIN PLATED

$T_{J\,MAX}$	θ_{JA}
110°C	200°C/W

Linear Technology Corporation
1630 McCarthy Blvd., Milpitas, CA 95035-7487
(408) 432-1900 • FAX: (408) 434-0507 • TELEX: 499-3977

BA/GP 0691 10K REV 0

© LINEAR TECHNOLOGY CORPORATION 1991

LINEAR TECHNOLOGY

SPECIFICATION NOTICE

LTC1049

August 1996

The Large-Signal Voltage Gain of the LTC®1049 is tested with the condition of $V_{OUT} = \pm 4.75V$. For complete specifications, typical performance curves and applications information, please see the LTC1049 data sheet.

, LTC and LT are registered trademarks of Linear Technology Corporation.

ELECTRICAL CHARACTERISTICS

$V_S = \pm 5V$, T_A = operating temperature range, unless otherwise specified.

PARAMETER	CONDITIONS		MIN	TYP	MAX	UNITS
Large-Signal Voltage Gain	$R_L = 100k$, $V_{OUT} = \pm 4.75V$	●	130	160		dB

For further information regarding this specification notice contact:

Linear Technology Corporation
1630 McCarthy Blvd.
Milpitas, California 95035-7417
Attn: Product Marketing Manager
Phone: (408) 432-1900

©1996 LT/HP 0896 • PRINTED IN USA