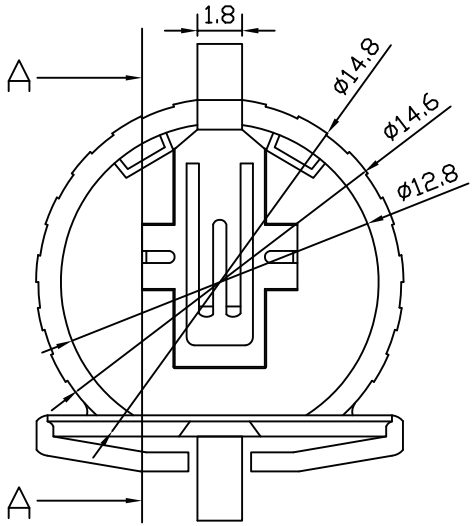

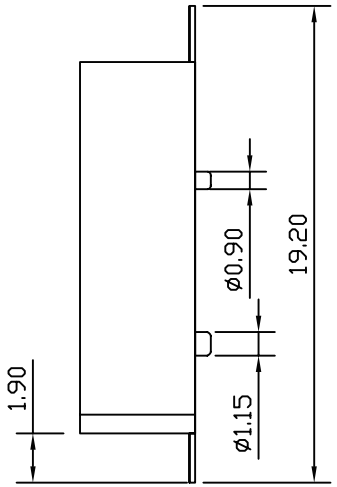

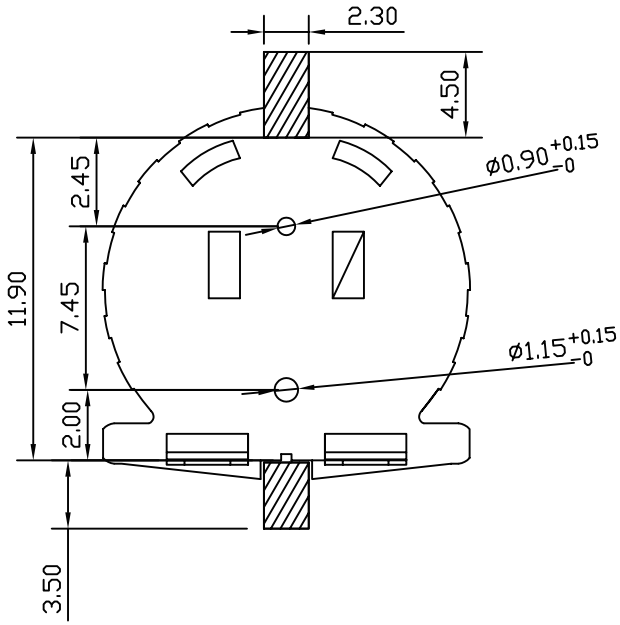

P. C. B LAYOUT

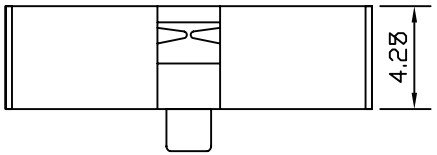

NOTES:

1. MATERIAL:
   a. HOUSING:PPS UL94 V-0
   b. CONTACT:PHOSPHOR BRONZE.
   (SURFACE PLATING:Sn100u″+Ni50u″
2. ELECTRIC:
   a. CONTACT RESISTANCE: 30 MLLIOHMS MAX
   b. INSULATION RESISTANCE: 1000MEGA OHMS MIN
   c. DIELECTNIC VOLTAGE: 500V AC ONE SEC LEVEL
   d. OPERATING TEMPERATURE: -55℃-105℃
3. Applicable : Battery CR1220

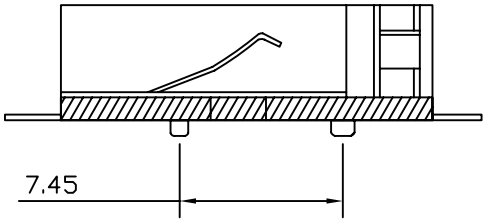

SECIION A-A

RoHS Compliant

MORETHANALL
PCB CONNECTORS
Cable ASSEMBLIES
煜倫股份有限公司
www.morethanall.com

DRAWING BY CY		TOLERANCES ARE
CHECKED BY GENIUS		X. ±
UNIT / mm	SCALE 1 : 1	.X ± 0.25
		.XX ± 0.13
DATE		.XXX ± 0.05
		ANG ±
SIZE A4	PPOJECTION	

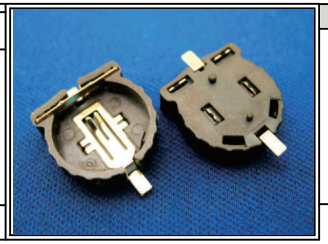

ORDER INFORMATION

BTH-V-12-LF

SERIES | 180°SMT | CR1220 | LEADFREE

DESCRIPTION: BATTERY BOX HOLDER