19-3986; Rev 0; 10/91

MAXIM

Complete, 12-Bit Multiplying DAC

MX7845

General Description

The MX7845 is a 12-bit, voltage-output, 4-quadrant, multiplying digital-to-analog converter (DAC). A precision internal output amplifier and thin-film resistors, laser-trimmed at the wafer level, maintain accuracy over the full operating temperature range. The output amplifier is internally compensated and drives ±10V into a 2kΩ load.

The MX7845 has buffered latches that are easily interfaced with microprocessors. Data is transferred into the input register from a 12-bit-wide data path. The input registers are controlled by standard CHIP SELECT ($\overline{CS}$) and WRITE ($\overline{WR}$) signals. For stand-alone operation, the $\overline{CS}$ and $\overline{WR}$ inputs are grounded, making all latches transparent. All logic inputs are level-triggered and compatible with TTL and +5V CMOS logic levels. For a detailed description of MX7845 operation, refer to the MAX501/MAX502 data sheet.

Applications

Automatic Test Equipment

Digital Attenuators

Programmable Power Supplies

Programmable-Gain Amplifiers

Digital to 4-20mA Converters

Features

- ♦ **Complete MDAC with Output Amplifier**
- ♦ **4-Quadrant Multiplication**
- ♦ **Guaranteed Monotonic (T_{MIN} to T_{MAX})**
- ♦ **Matched Application Resistors**
- ♦ **Small 0.3" 24-Pin DIP Package**

Ordering Information

PART	TEMP. RANGE	PIN-PACKAGE
MX7845JN	0°C to +70°C	24 Narrow Plastic DIP
MX7845KN	0°C to +70°C	24 Narrow Plastic DIP
MX7845JR	0°C to +70°C	24 Wide SO
MX7845KR	0°C to +70°C	24 Wide SO
MX7845JP	0°C to +70°C	28 PLCC
MX7845KP	0°C to +70°C	28 PLCC
MX7845J/D	0°C to +70°C	Dice*
MX7845AEWG	-40°C to +85°C	24 Wide SO
MX7845BEWG	-40°C to +85°C	24 Wide SO
MX7845AQ	-40°C to +85°C	24 Narrow CERDIP
MX7845BQ	-40°C to +85°C	24 Narrow CERDIP
MX7845SE	-55°C to +125°C	28 LCC**
MX7845SQ	-55°C to +125°C	24 Narrow CERDIP**
MX7845TQ	-55°C to +125°C	24 Narrow CERDIP**

* *Contact factory for dice specifications.*
** *Contact factory for availability and processing to MIL-STD-883.*

Functional Diagram

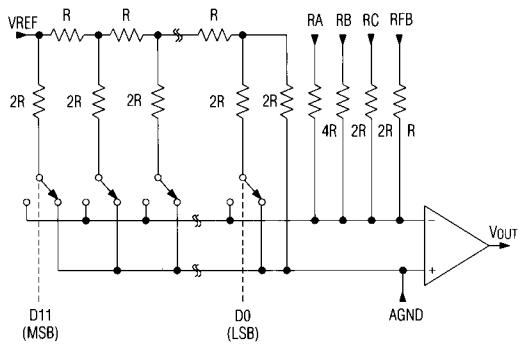

MX7845 SIMPLIFIED DAC AND AMPLIFIER CIRCUIT

Pin Configuration

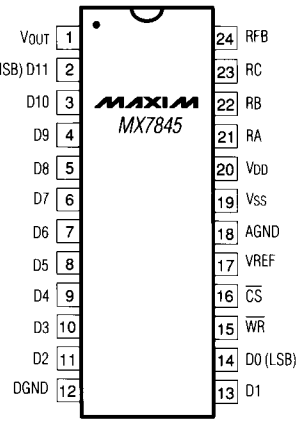

DIP/SO

MAXIM is a registered trademark of Maxim Integrated Products.

Complete, 12-Bit Multiplying DAC

ABSOLUTE MAXIMUM RATINGS

V_{DD} to DGND ..... -0.3V, +17V
V_{SS} to DGND ..... +0.3V, -17V
VREF to AGND ..... ±25V
V_{RFB} to AGND ..... ±25V
V_{RA} to AGND ..... ±25V
V_{RB} to AGND ..... ±25V
V_{RC} to AGND ..... ±25V
V_{OUT} to AGND (Note 1) ..... V_{DD} + 0.3V, V_{SS} - 0.3V
V_{DD} to AGND ..... -0.3V, +17V
AGND to DGND ..... -0.3V, V_{DD}

Digital Input Voltage to DGND ..... -0.3V, VDD + 0.3V
Continous Power Dissipation (any package)
to +75°C 650mW
derate above +75°C ..... 10mW/°C
Operating Temperature Ranges:
MX7845J_/K_ ..... 0°C to +70°C
MX7845A_/B_ ..... -40°C to +85°C
MX7845S_/T_ ..... -55°C to +125°C
Storage Temperature Range ..... -65°C to +150°C
Lead Temperature (soldering, 10 sec) ..... +300°C

Note 1: V_{OUT} may be shorted to AGND, V_{DD}, or V_{SS} if the package power dissipation is not exceeded.

Stresses beyond those listed under "Absolute Maximum Ratings" may cause permanent damage to the device. These are stress ratings only, and functional operation of the device at these or any other conditions beyond those indicated in the operational sections of the specifications is not implied. Exposure to absolute maximum rating conditions for extended periods may affect device reliability.

ELECTRICAL CHARACTERISTICS

(V_{DD} = +15V ±5%, V_{SS} = -15V ±5%, VREF = +10V, AGND = DGND = 0V, V_{OUT} connected to RFB, R_L = 2kΩ, C_L = 100pF, T_A = T_{MIN} to T_{MAX}, all grades, unless otherwise noted.)

PARAMETER	SYMBOL	CONDITIONS		MIN	TYP	MAX	UNITS
ACCURACY							
Resolution	N			12			Bits
Relative Accuracy (Note 2)	INT	T_A = +25°C	MX7845K/B/T			±1/2	LSB
			MX7845J/A/S			±1	
			MX7845K			±3/4	
			MX7845J/B/T			±1	
			MX7845A			±3/2	
			MX7845S			±2	
Differential Nonlinearity	DNL					±1	LSB
Zero-Code Offset Error (Note 3)		T_A = +25°C	MX7845K/B/T			±1	mV
			MX7845J/A/S			±2	
			MX7845K/B			±3	
			MX7845J/A/T			±4	
			MX7845S			±5	
Offset Temperature Coefficient	ΔVOS/ ΔTemp				±5		µV/°C
Gain Error		RFB, V_{OUT} connected	MX7845K/B/T			±3	LSB
			MX7845J/A/S			±6	
		RC or RB, V_{OUT} connected; VREF = 5V	MX7845K/B/T			±6	
			MX7845J/A/S			±9	
		RA, V_{OUT} connected; VREF = 2.5V	MX7845K/B/T			±8	
			MX7845J/A/S			±10	
Gain Temperature Coefficient	ΔGain/ ΔTemp	RFB, V_{OUT} connected			±2		ppm of FSR/°C
Reference Input Resistance				8	12	16	kΩ
Application Resistor Ratio Matching		RA to RB to RC matching				0.5	%

ELECTRICAL CHARACTERISTICS (continued)

(V_{DD} = +15V ±5%, V_{SS} = -15V ±5%, VREF = +10V, AGND = DGND = 0V, V_{OUT} connected to RFB, R_L = 2kΩ, C_L = 100pF, T_A = T_{MIN} to T_{MAX}, all grades, unless otherwise noted.)

PARAMETER	SYMBOL	CONDITIONS	MIN	TYP	MAX	UNITS
DIGITAL INPUTS						
Input Current	I_{IN}	V_{IN} = 0V and V_{DD}			±1	µA
Input Low Voltage	V_{IL}				0.8	V
Input High Voltage	V_{IH}		2.4			V
Input Capacitance	C_{IN}			5		pF
POWER REQUIREMENTS						
Supply Voltage (Note 4)	V_{DD}		14.25		15.75	V
	V_{SS}		-14.25		-15.75	
Supply Current	I_{DD}	V_{OUT} unloaded			10	mA
	I_{SS}	V_{OUT} unloaded			4	
Power-Supply Rejection	PSR	V_{DD} only, VREF = -10V			±0.2	%/%
		V_{SS} only			±0.2	

Note 2: Guaranteed monotonic over temperature.
Note 3: DAC register loaded with all 0s.
Note 4: The MX7845 can operate from ±12V supplies.

TIMING CHARACTERISTICS

(VDD = +15V æ5%, VSS = -15V æ5%, VREF = +10V, AGND = DGND = 0V, T_A = T_{MIN} to T_{MAX}, all grades, unless otherwise noted.) (Note 5)

PARAMETER	SYMBOL	CONDITIONS	MIN	TYP	MAX	UNITS
Chip Select to Write-Setup Time	t_{CS}	T_A = +25°C	100			ns
		MX7845J/K/A/B	135			
		MX7845S/T	140			
Chip Select to Write-Hold Time	t_{CH}	T_A = +25°C	0			ns
		MX7845J/K/A/B	0			
		MX7845S/T	0			
Write Pulse Width	t_{WR}	T_A = +25°C	100			ns
		MX7845J/K/A/B	135			
		MX7845S/T	140			
Data-Setup Time	t_{DS}	T_A = +25°C	100			ns
		MX7845J/K/A/B	100			
		MX7845S/T	120			
Data-Hold Time	t_{DH}	T_A = +25°C	20			ns
			20			

Note 5: All input signal rise and fall times measured from 10% to 90% of +5V; t_r = t_f = 20ns. Timing measurement reference is (V_{IH} + V_{IL}) /2.

Complete, 12-Bit Multiplying DAC

AC PERFORMANCE CHARACTERISTICS

(T_A = T_{MIN} to T_{MAX}, all grades, unless otherwise noted.) (Note 6)

PARAMETER	SYMBOL	CONDITIONS		MIN	TYP	MAX	UNITS
DYNAMIC PERFORMANCE							
Output-Voltage Settling Time (Note 7)	t_S	V_{OUT} LOAD = 2kΩ, 100pF			2.5	5.0	µs
Slew Rate	SR	V_{OUT} LOAD = 2kΩ, 100pF			7		V/µs
DAC Glitch Impulse (Note 8)					450		(nV)(s)
Multiplying Feedthrough Error (Note 9)					5		mV_{p-p}
Unity-Gain Small-Signal Bandwidth (Note 10)		V_{OUT}, RFB connected			600		kHz
Full-Power Bandwidth (Note 11)		V_{OUT}, RFB connected, R_L = 2kΩ			250		kHz
Total Harmonic Distortion (Note 12)	THD				-90		dB
OUTPUT CHARACTERISTICS (Note 13)							
Open-Loop Gain	A_{VO}	V_{OUT} = ±10V, R_L = 2kΩ		85			dB
Output Voltage Swing	V_O	R_L = 2kΩ, C_L = 100pF		±10			V
Output Resistance	R_O	RFB, V_{OUT} connected			0.2		Ω
Short-Circuit Current		VOUT, AGND connected; T_A = +25°C			15		mA
Output Noise Voltage (Note 14)		T_A = +25°C	0.1Hz to 10Hz		2		$µV_{RMS}$
			f = 10Hz		250		$nV\sqrt{Hz}$
			f = 100Hz		100		
			f = 1kHz		50		
			f = 10kHz		50		
			f = 100kHz		50		

Note 6: AC PERFORMANCE CHARACTERISTICS are included for design guidance and are not subject to test.
Note 7: Settling to 0.01% of full-scale range. DAC register alternately loaded with all 0s and all 1s.
Note 8: Measured with VREF = 0V. DAC register alternately loaded with all 1s and all 0s.
Note 9: VREF = ±10V, 10kHz sine wave. DAC register loaded with all 0s.
Note 10: DAC register loaded with all 1s. VREF = $100mV_{p-p}$ sine wave.
Note 11: DAC register loaded with all 1s. VREF = $20V_{p-p}$ sine wave.
Note 12: VREF = $6V_{RMS}$, 1kHz sine wave.
Note 13: 2kΩ minimum specified load resistance.
Note 14: Includes output amplifier noise and Johnson Noise of RFB.

Pin Description

DIP/SO PIN	PLCC/LCC PIN	NAME	FUNCTION
1	2	V_{OUT}	Voltage Output
2-11	3-7, 9-13	D11-D2	Data Bits 2 to 11 (MSB)
12	14	DGND	Digital Ground
13, 14	16, 17	D1, D0	Data Bits 0 to 1 (LSB)
15	18	$\overline{WR}$	Write Input. Active Low.
16	19	$\overline{CS}$	Chip-Select Input. Active Low.
17	20	VREF	Reference Input to DAC
18	21	AGND	Analog Ground

DIP/SO PIN	PLCC/LCC PIN	NAME	FUNCTION
19	23	V_{SS}	-12V to -15V Supply Voltage Input
20	24	V_{DD}	+12V to +15V Supply Voltage Input
21	25	RA	Scaling Resistor: RA = 4RFB
22	26	RB	Scaling Resistor: RB = 2RFB
23	27	RC	Scaling Resistor: RC = 2RFB
24	28	RFB	Feedback Resistor
	1, 8, 15, 22	N.C.	No Connect

For application information, refer to the MAX501/MAX502 data sheet.

Maxim cannot assume responsibility for use of any circuitry other than circuitry entirely embodied in a Maxim product. No circuit patent licenses are implied. Maxim reserves the right to change the circuitry and specifications without notice at any time.

© 1991 Maxim Integrated Products Printed USA