TC40H393P/F

C²MOS DIGITAL INTEGRATED CIRCUIT
SILICON MONOLITHIC

TC40H393 DUAL 4-BIT BINARY COUNTER

The TC40H393 is a dual binary counter with CLEAR function.

When CLEAR input is set to "H" level, the contents of each flip-flop are cleared, and all the outputs go to "L" level. The TC40H393 is triggered at the falling edge of $\overline{CLOCK}$ input.

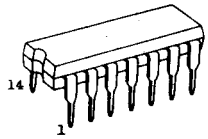

DIP14(3D14A-P)

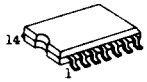

MFP14(F14GB-P)

MAXIMUM RATINGS

CHARACTERISTIC	SYMBOL	RATING	UNIT
Supply Voltage	V_{DD}	$V_{SS}-0.5 \sim V_{SS}+10$	V
Input Voltage	V_{IN}	$V_{SS}-0.5 \sim V_{DD}+0.5$	V
Output Voltage	V_{OUT}	$V_{SS}-0.5 \sim V_{DD}+0.5$	V
Input Current	I_{IN}	±10	mA
Power Dissipation	P_D	300(DIP)/180(MFP)	mW
Storage Temperature	T_{stg}	-65 ~ 150	°C
Lead Temp./Time	T_{sol}	260°C · 10 sec	

TRUTH TABLE

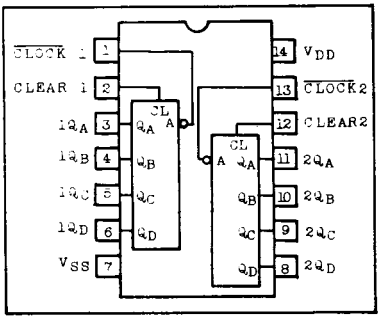

BLOCK DIAGRAM

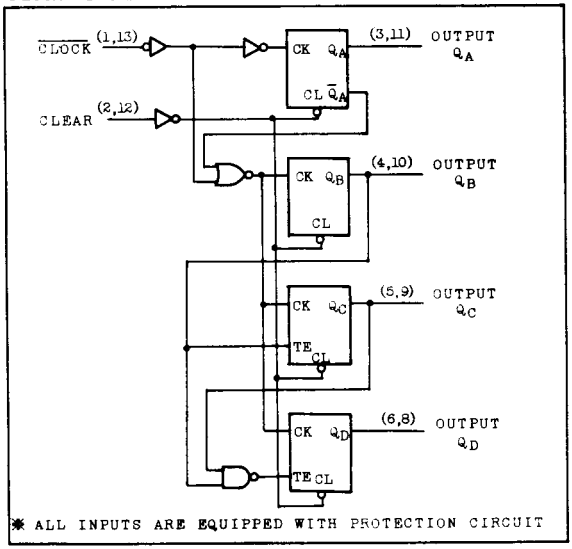

✱ ALL INPUTS ARE EQUIPPED WITH PROTECTION CIRCUIT

COUNT SEQUENCE

COUNT	OUTPUT			
	Q_A	Q_B	Q_C	Q_D
0	L	L	L	L
1	H	L	L	L
2	L	H	L	L
3	H	H	L	L
4	L	L	H	L
5	H	L	H	L
6	L	H	H	L
7	H	H	H	L
8	L	L	L	H
9	H	L	L	H
10	L	H	L	H
11	H	H	L	H
12	L	L	H	H
13	H	L	H	H
14	L	H	H	H
15	H	H	H	H

RECOMMENDED OPERATING CONDITIONS (V_{SS}=0.0V)

CHARACTERISTIC	SYMBOL	TEST CONDITION	MIN.	TYP.	MAX.	UNIT
Supply Voltage	V_{DD}		2.0	-	8.0	V
Input Voltage	V_{IN}		0	-	V_{DD}	V
Operating Temperature	T_{opr}		-40	-	85	°C

ELECTRICAL CHARACTERISTICS (V_{SS}=0.0V)

CHARACTERISTIC		SYMBOL	TEST CONDITION	V_{DD} (V)	-40°C MIN.	-40°C MAX.	25°C MIN.	25°C TYP.	25°C MAX.	85°C MIN.	85°C MAX.	UNIT
High Level Output Voltage		V_{OH}	$\|I_{OUT}\|$<1μA $V_{IN}=V_{DD}$	5	4.95	-	4.95	5.0	-	4.95	-	V
Low Level Output Voltage		V_{OL}	$\|I_{OUT}\|$<1μA $V_{IN}=V_{SS}, V_{DD}$	5	-	0.05	-	0.0	0.05	-	0.05	V
High Level Output Current		I_{OH}	V_{OH}=4.6V $V_{IN}=V_{DD}$	5	-0.52	-	-0.44	-	-	-0.36	-	mA
Low Level Output Current		I_{OL}	V_{OL}=0.4V $V_{IN}=V_{SS}, V_{DD}$	5	1.4	-	1.1	-	-	0.8	-	mA
Input Voltage	"H" Level	V_{IH}	$\|I_{OUT}\|$<1μA V_{OUT}=0.5V V_{OUT}=4.5V	5	4.0	-	4.0	-	-	4.0	-	V
	"L" Level	V_{IL}		5	-	1.0	-	-	1.0	-	1.0	V
Input Current	"H"Level	I_{IH}	V_{IH}=8.0V	8	-	0.3	-	10^{-5}	0.3	-	1.0	μA
	"L"Level	I_{IL}	V_{IL}=0.0V	8	-	-0.3	-	-10^{-5}	-0.3	-	-1.0	μA
Quiescent Supply Current		I_{DD}	*$V_{IN}=V_{SS}, V_{DD}$	5	-	12.5	-	10^{-3}	12.5	-	75	μA

* All valid input combinations.

SWITCHING CHARACTERISTICS (Ta=25°C, V_{SS}=0V, V_{DD}=5V, C_L=15pF)

CHARACTERISTIC		SYMBOL	TEST CONDITION	MIN.	TYP.	MAX.	UNIT
Output Rise Time		t_{or}		-	18	35	ns
Output Fall Time		t_{of}		-	15	30	ns
Propagation Delay Time	Low-High	t_{pLH}	CLOCK - Q	-	45	68	ns
	High-Low	t_{pHL}		-	40	60	ns
Propagation Delay Time High-Low		t_{pHL}	CLEAR - Q	-	36	54	ns
Maximum Clock Input Rise/Fall Time		$t_{r\phi}$ $t_{f\phi}$		1.0	100	-	μs
Minimum Clear Pulse Width		t_w		-	20	35	ns
Minimum Clear Removal Time		t_{rem}		-	10	20	ns
Maximum Clock Frequency		f_{MAX}		15	30	-	MHz
Input Capacitance		C_{IN}		-	5		pF

TC40H393P/F

SWITCHING TIME TEST CIRCUIT AND WAVEFORM

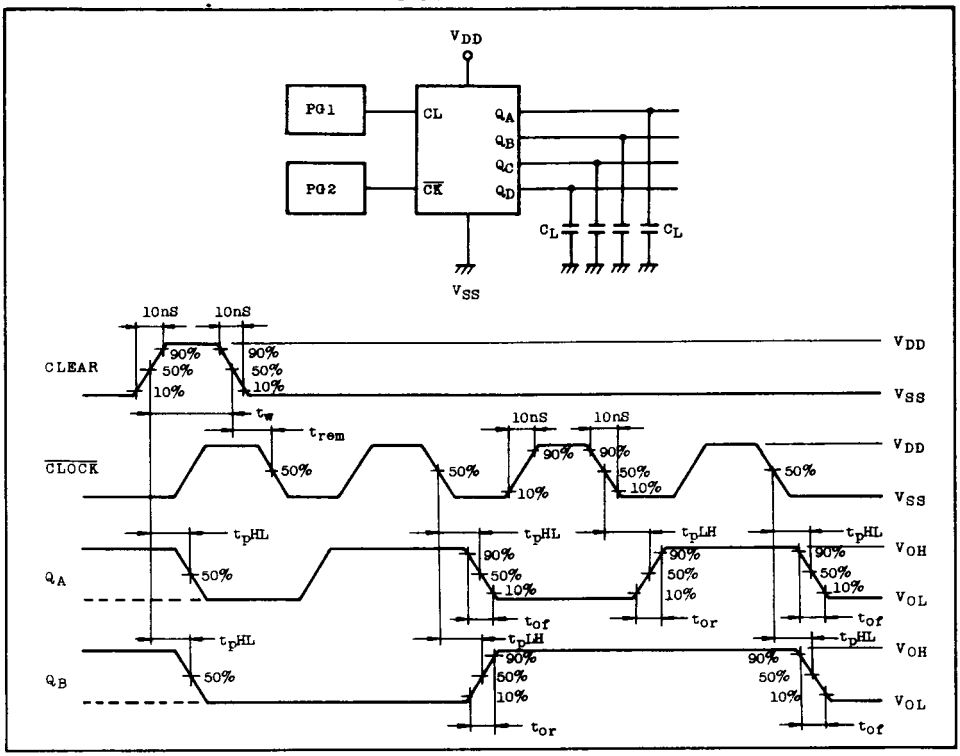

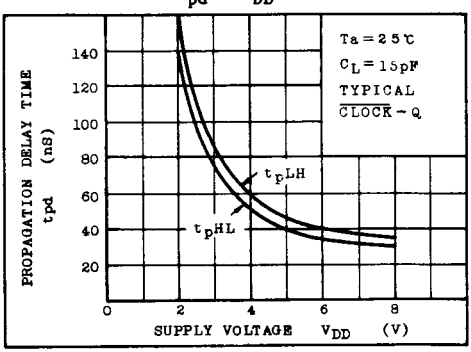

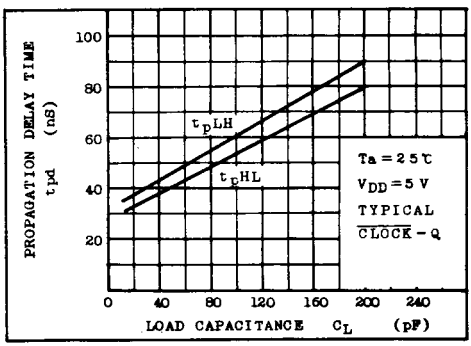

TC40H393P/F

I_{DD} – f_{IN}

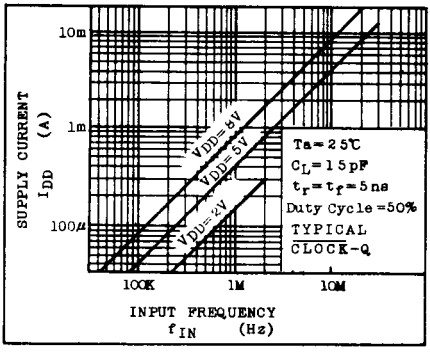

$f_{max\phi}$ – V_{DD}

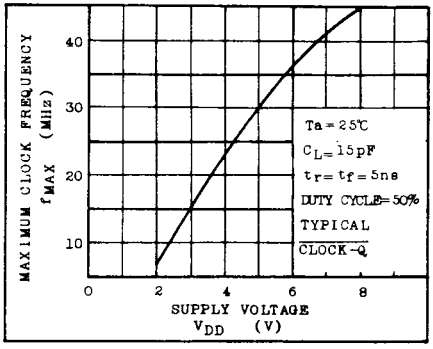

I_{OL} – V_{CL}

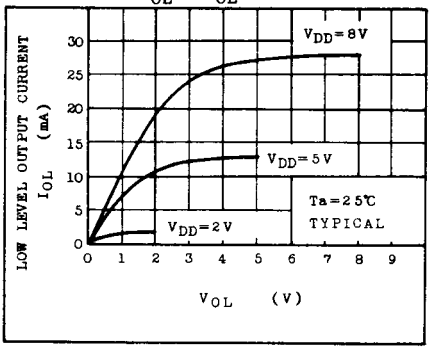
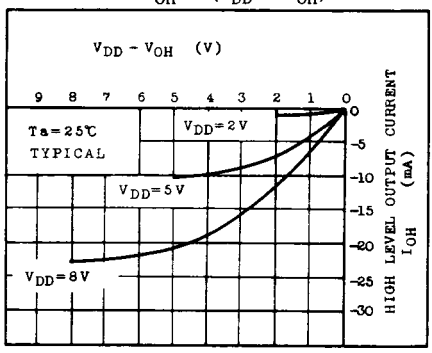
I_{OH} – (V_{DD} – V_{OH})