PC920 Power OPIC Photocoupler

T-41-83

■ Features

1. High power
   (I_{O1} : MAX. −0.8A (DC))
   (I_{O2} : MAX. 1.6A (Pulse))
2. Low input current drive
   (I_{FLH} : MAX. 2mA at $Ta=T_{opr}$)
3. Operating supply voltage V_{CC} : 5.4~15V
4. Compact single-in-line package (With heat sink)
5. UL recognized, file No. E64380

■ Applications

1. Inverter controlled air conditioners

■ Outline Dimensions (Unit : mm)

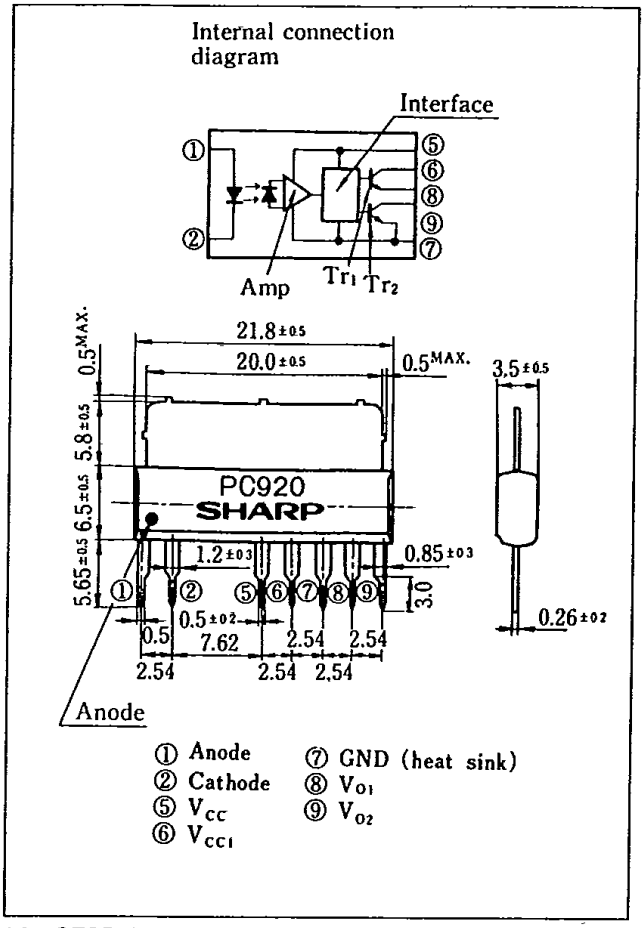

※ OPIC is a registered trademark of Sharp and stands for Optical IC. It has a light detecting element and signal processing circuitry integrated onto a single chip.

■ Absolute Maximum Ratings (Ta=25°C)

Parameter		Symbol	Rating	Unit
Input	Forward current	I_F	50	mA
	Reverse voltage	V_R	6	V
	Power dissipation	P	70	mW
Output	Supply voltage	V_{CC}	16	V
	V_{O1} output current	I_{O1}	−0.8	A
	*1 V_{O2} output current	I_{O2P}	1.6	A
Total power dissipation		P_{tot}	1,200	mW
*2 Isolation voltage		V_{iso}	1,500	Vrms
Operating temperature		T_{opr}	−20~+80	°C
Storage temperature		T_{stg}	−55~+125	°C
*3 Soldering temperature		T_{sol}	260	°C

*1 Pulse width≦10μs, Duty ratio=0.02
*2 RH=40~60%, AC for 1 minute
*3 For 10 seconds

■ Electro-optical Characteristics

(Ta=25°C unless specified)

Parameter			Symbol	Conditions	MIN.	TYP.	MAX.	Unit
Input	Forward voltage		V_F	I_F=2mA	—	1.1	1.4	V
				I_F=0.1mA	0.6	0.95	—	
	Reverse current		I_R	V_R=3V	—	—	10	μA
	Terminal capacitance		C_t	V=0, f=1kHz	—	30	80	pF
Output	Operating supply voltage		V_{CC}		5.4	6.0	15	V
	V_{O1} output voltage		V_{O1}	$V_{CC}=V_{CC1}$=6V, I_{O1}=−0.3A, I_F=2mA	4.5	5.2	—	V
	V_{O2} output voltage		V_{O2}	$V_{CC}=V_{CC1}$=6V, I_{O2P}=1A, I_F=0	—	0.3	2.0	V
	V_{O1} leak current		I_{OL1}	$V_{CC}=V_{CC1}$=6V, V_{O1}=GND, I_F=0	—	—	200	μA
	V_{O2} leak current		I_{OL2}	$V_{CC}=V_{CC1}=V_{O2}$=6V, I_F=2mA	—	—	200	μA
	High level supply current		I_{CCH}	$V_{CC}=V_{CC1}$=6V, I_F=2mA	—	5	10	mA
	Low level supply current		I_{CCL}	$V_{CC}=V_{CC1}$=6V, I_F=0	—	12	20	mA
Transfer characteristics	*4"Low→High" threshold input current		I_{FLH}	$V_{CC}=V_{CC1}$=6V, R_{L1}=15Ω	—	0.5	1.0	mA
				Ta=T_{opr}, $V_{CC}=V_{CC1}$=6V, R_{L1}=15Ω	0.1	—	2.0	mA
	Isolation resistance		R_{ISO}	DC=500V, RH=40~60%	5×10^{10}	10^{11}	—	Ω
	Response time	"Low→High" propagation time	t_{PLH}	$V_{CC}=V_{CC1}$=6V	—	3	10	μs
		"High→Low" propagation time	t_{PHL}	I_F=2mA	—	3	10	
		Rise time	t_r	R_{L1}=15Ω	—	0.2	2	
		Fall time	t_f	R_{L2}=18Ω	—	0.2	2	

*4 I_{FLH} represents forward current when output goes from "low" to "high".

■ Truth Table

Input	Output	Tr_1	Tr_2
ON	High level	ON	OFF
OFF	Low level	OFF	ON

Test Circuit for V_{O1}

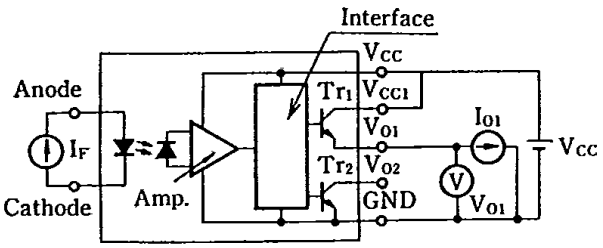

Test Circuit for V_{O2}

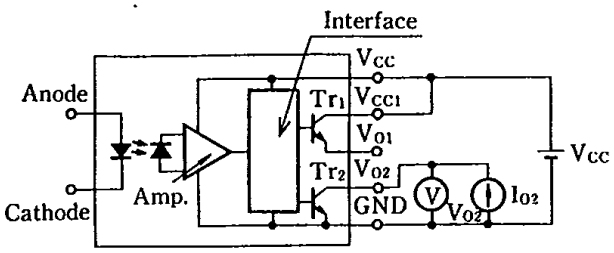

Test Circuit for I_{OL1}

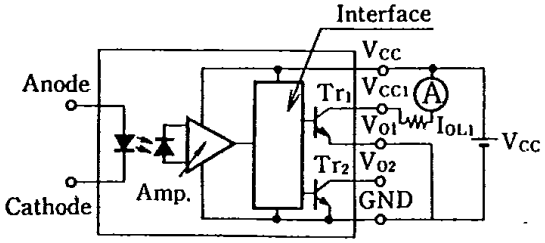

Test Circuit for I_{OL2}

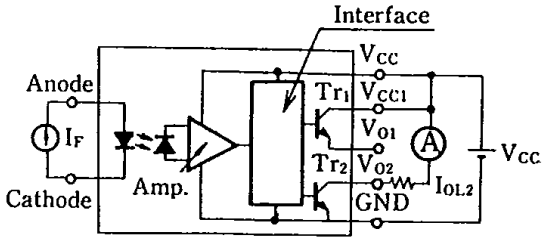

Test Circuit for Response Time

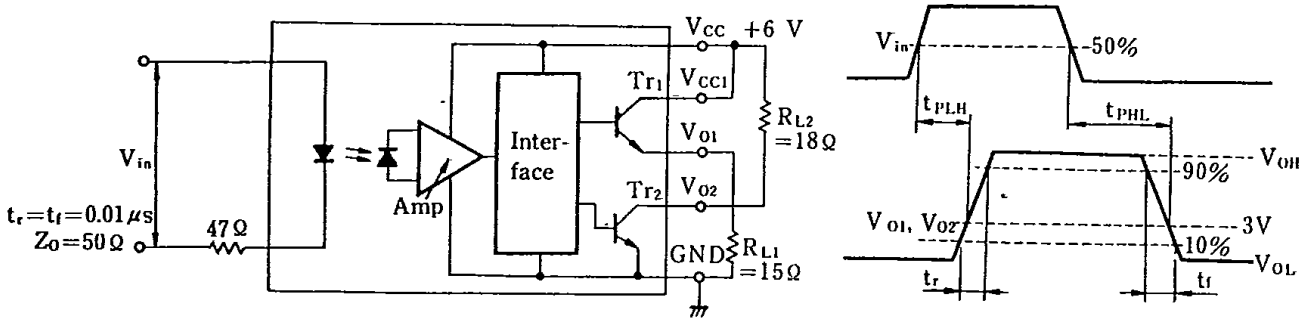

Fig. 1 Forward Current vs. Ambient Temperature

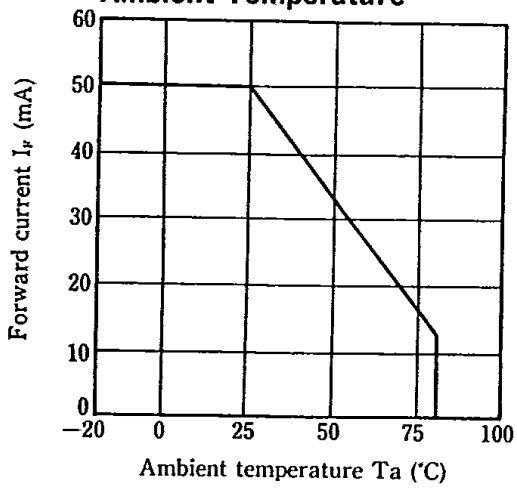

Fig. 2 Total Power Dissipation vs. Ambient Temperfture

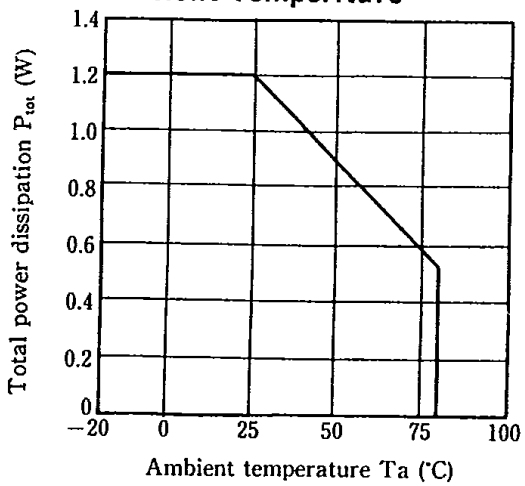

Fig. 3 Forward Current vs. Forward Voltage

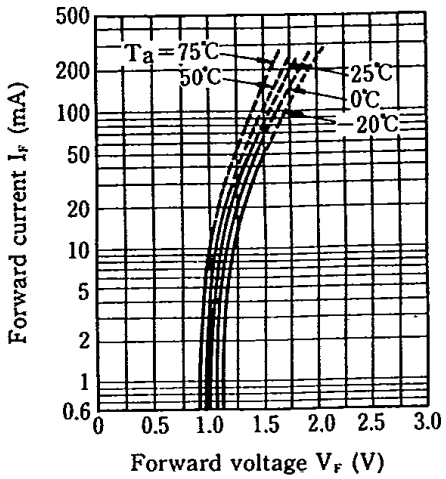

Fig. 4 Relative Threshold Input Current vs. Supply Voltage

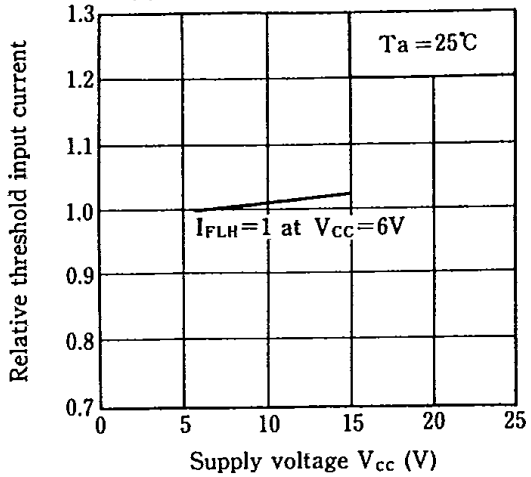

Fig. 5 Relative Threshold Input Current vs. Ambient Temperature

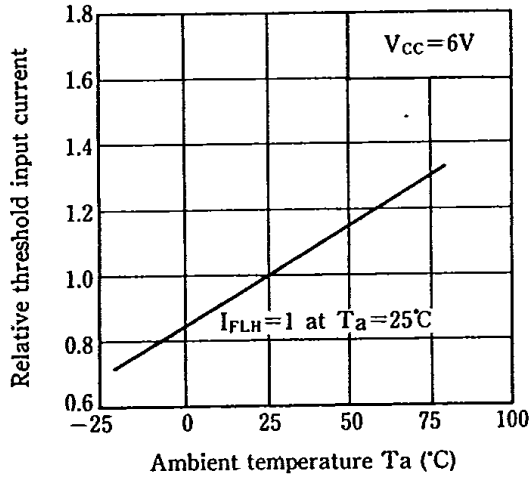

Fig. 6 Output Voltage vs. Output Current (Tr_1)

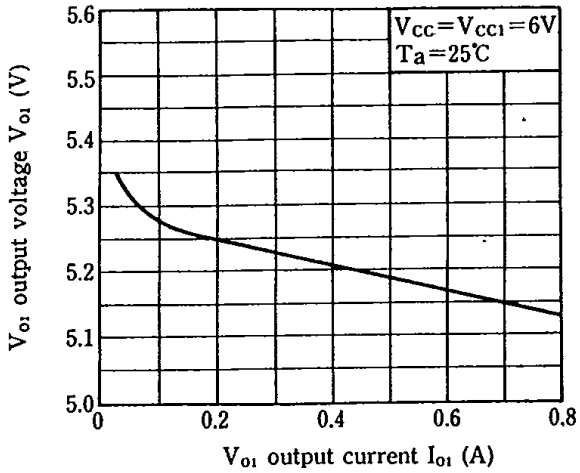

Fig. 7 Output Voltage vs. Output Current (Tr_2)

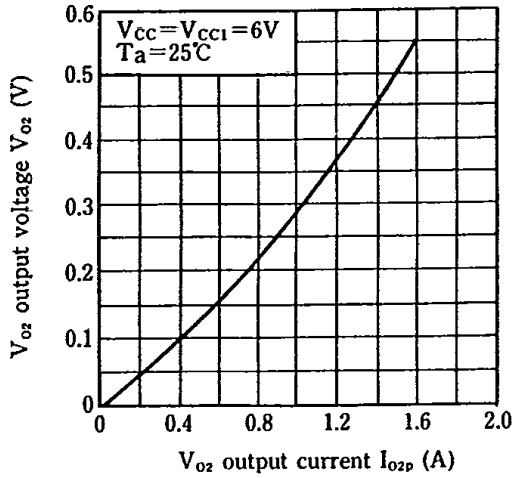

Fig. 8 Output Voltage vs. Ambient Temperature (Tr_1)

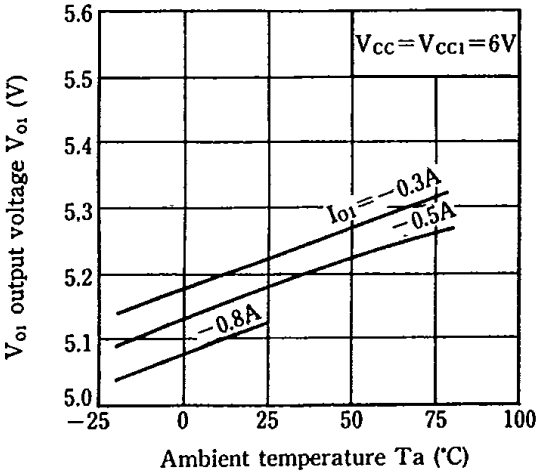

Fig. 9 Output Voltage vs. Ambient Temperature (Tr_2)

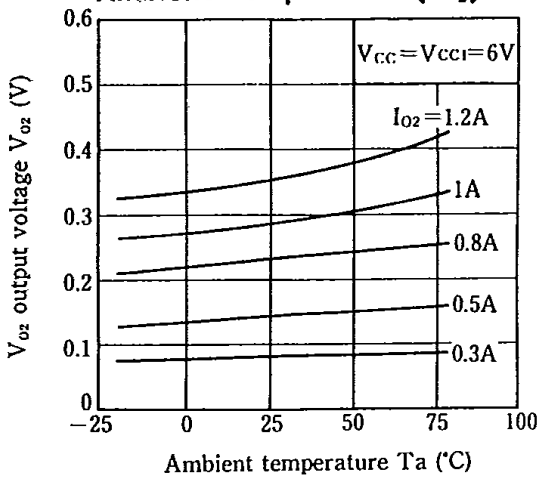

Fig. 10 Supply Current vs. Supply Voltage

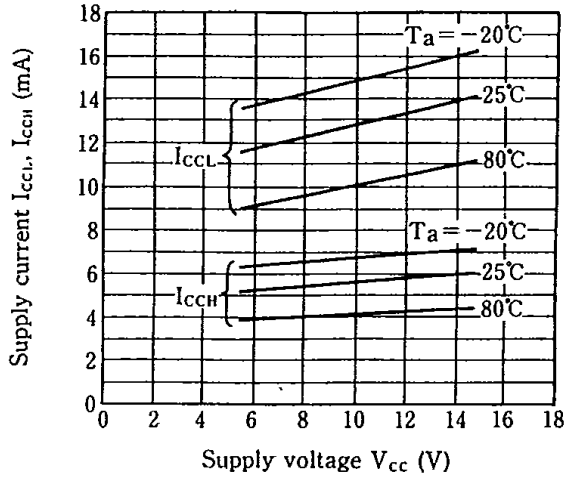

Fig. 11 Propagation Time vs. Forward Current

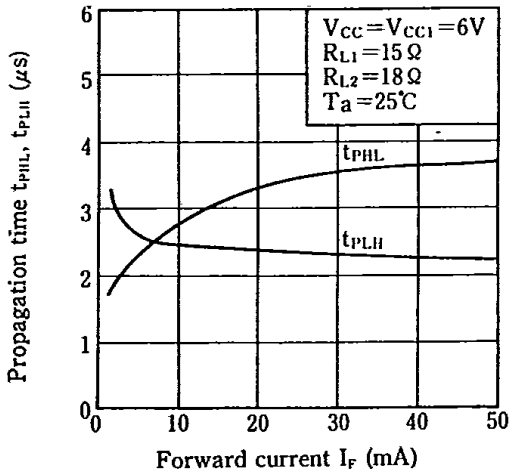

Fig. 12 Propagation Time vs. Ambient Temperature

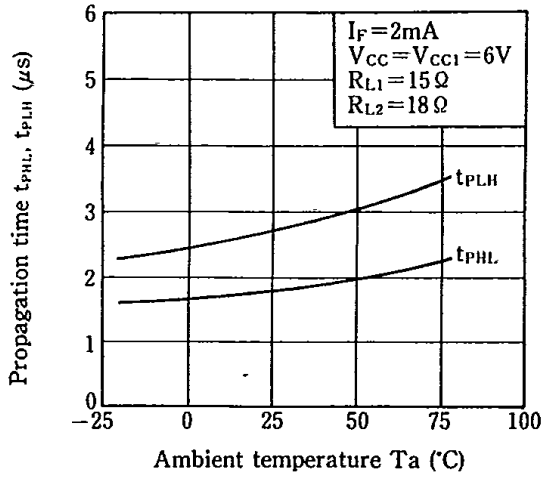
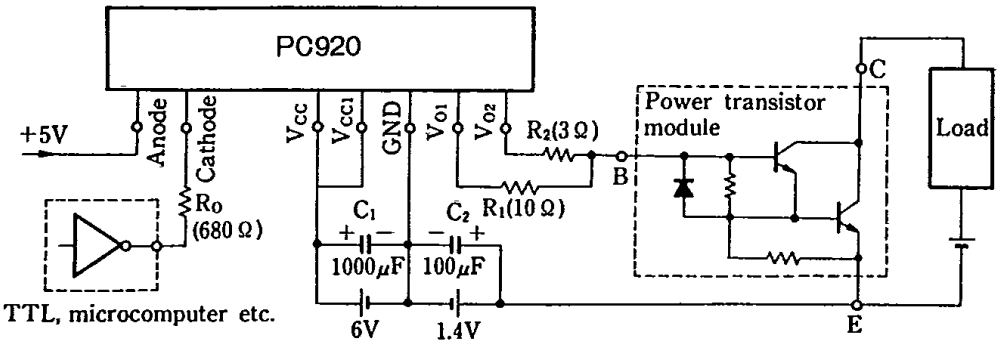
■ Application Circuit Example