SAF1091, SAF1092 **Speedometer and Mileage Indicator IC Kit** (18-Pin Plastic Package)

This IC kit is intended for designing a programmable speedometer and mileage indicator for cars with 12 V or 24 V supplies. Due to its programmability, for which seven programming pins are provided, the circuit can be easily adapted to different cars and different tyre diameters. An additional pulse output is provided for driving, e.g., a taximeter.

SAF1091 – proximity switch, voltage regulator, overvoltage protection (bipolar technology)

This IC detects the car's speed by means of an LC oscillator whose coil is placed near the drive shaft of the gearbox and is influenced by a piece of metal attached to this shaft. Each rotation causes a dropout in oscillation, in this way producing a pulse train whose frequency is equal to the rotation speed of the shaft and thus proportional to the speed of the vehicle. The pulses are fed to the SAF1092 Logic IC for processing. After this, they are fed back to the SAF1091 where they control a current source for indicating the speed on a moving-coil meter and a stepping motor for registering the miles covered.

SAF1092 – logic IC and frequency divider (CMOS technology)

The main part of this IC is a programmable counter which counts the periods of a 470 kHz (or 50 kHz) oscillator, controlled by the input pulses from the SAF1091, and a divider which can be set to 2^{13} or 2^{14} as required. This divider, via the SAF1091, drives the two coils of the stepping motor for mileage indication.

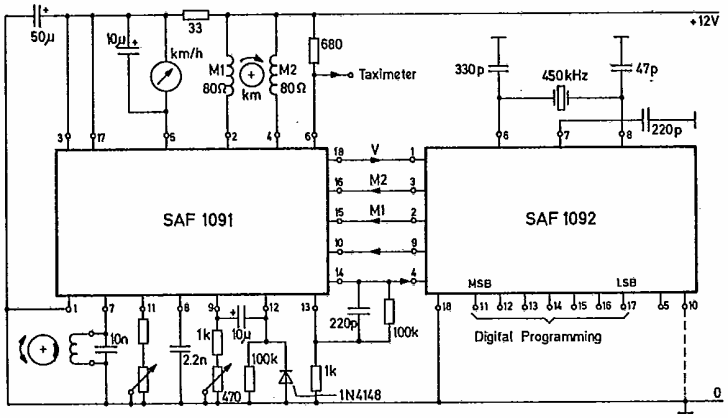

SAF1091 and SAF1092 Application Circuit

SAK215 **Pulse Shaper for Rev-Counters** (8-Pin Plastic Package)

The monolithic integrated circuit SAK215 is designed for use in revolution counters of cars and for other applications like frequency to current converters. By use of suitable external circuitry the revolution counter can be adapted to engines with two to eight cylinders. It is designed for a nominal 12 V DC supply.

The Figure shows the operating circuit of a revolution counter with FSD = 6000 RPM (two ignition pulses per turn of the crank-shaft) at a nominal battery voltage of 12 V. Current consumption of the IC is about 12 mA.

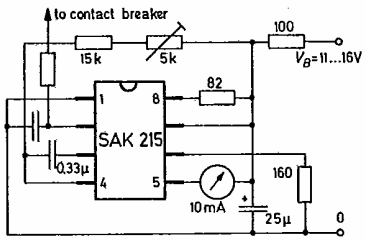

SAK215 Application Circuit

TCA700Y **10 V Car Voltage Regulator** (Plastic Package TO-202/1)

Monolithic integrated voltage regulator in bipolar technology, especially designed for stabilized power supplies of car instrumentation in cars with 12 V accumulators. This IC features narrow tolerance on output voltage, a low temperature coefficient and is equipped with an automatic current limiter and a thermal overload protection which prevents destruction of the IC in case of accidental overloads, for example short-circuits.

A sufficiently large cooling fin must be provided, to ensure that under normal working conditions the max. permissible junction temperature is not exceeded, and the thermal overload protection does not operate.

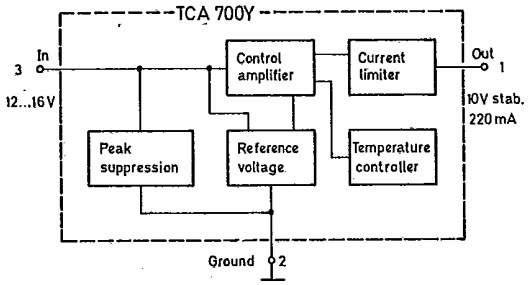

TCA700Y Block Diagram