NPN SILICON RF TRANSISTOR

DESCRIPTION:

The **ASI MRF951** is Designed for high gain. Low noise small-signal amplifiers. Applications up to 2.0 GHz.

FEATURES:

- Low Noise Figure
- High Gain
- ***Omnigold***™ Metalization System

PACKAGE STYLE

Dim. Are in mm

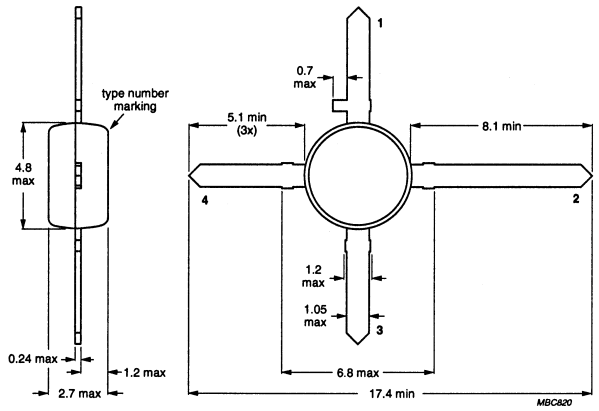

Leads 1 and 3 = Emitter 2 = Collector 4 = Base

MAXIMUM RATINGS

I_C	100 mA
V_{CBO}	20 V
V_{CEO}	10 V
V_{EBO}	1.5 V
P_{DISS}	1.0 W @ T_C = 25 °C
T_J	-65 °C to +150 °C
T_{STG}	-65 °C to +150 °C
θ_{JC}	100 °C/W

CHARACTERISTICS T_C = 25 °C

SYMBOL	TEST CONDITIONS			MINIMUM	TYPICAL	MAXIMUM	UNITS
BV_{CBO}	I_C = 0.1 mA			20			V
BV_{CEO}	I_C = 0.1 mA			10			V
I_{CBO}	V_{CB} = 10 V					0.1	µA
I_{EBO}	V_{EB} = 1.0 V					0.1	µA
h_{FE}	V_{CE} = 6.0 V	I_C = 5.0 mA		50		200	---
C_{cb}	V_{CB} = 10 V		f = 1.0 MHz		0.45		pF
G_{NF}	V_{CE} = 6.0 V	I_C = 5.0 mA	f = 1.0 GHz		14		dB
			f = 2.0 GHz		9.0		
$NF_{50\Omega}$	V_{CE} = 6.0 V	I_C = 5.0 mA	f = 1.0 GHz		1.9	2.8	dB

Specifications are subject to change without notice.