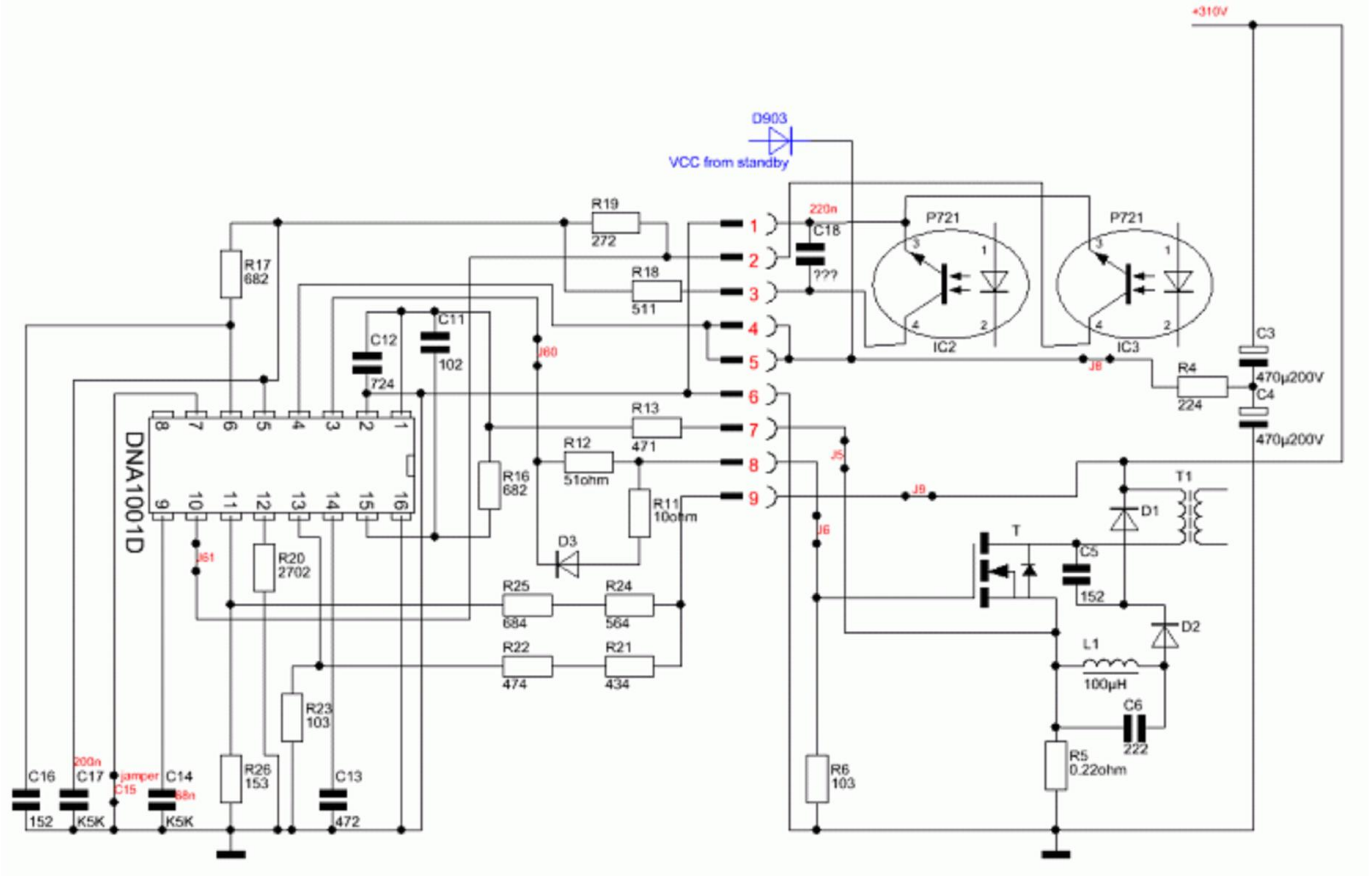
+310V
D903
VCC from standby
R19
272
R18
511
R17
682
C12
724
C11
102
J60
220n
C18
???
P721
P721
IC2
IC3
J8
C3
470µ200V
C4
470µ200V
R4
224
R13
471
R12
51ohm
R11
10ohm
R16
682
D3
J5
J8
J6
T1
D1
T
C5
152
D2
L1
100µH
C6
222
R5
0.22ohm
R6
103
DNA1001D
J61
R20
2702
R25
684
R24
564
R22
474
R21
434
R23
103
R26
153
C13
472
C16
152
200n
C17
K5K
jamper
C15
C14
K5K