VOLUME 1

OPTICS & LASERS CATALOG

Precisely what you need™

IDEX

OPTICS & PHOTONICS

MARKETPLACE

ADVANCED THIN FILMS

CVI Laser Optics

MELLES GRIOT

Semrock

CONTENTS

OPTICAL COMPONENTS

WINDOWS & OPTICAL FLATS 1
PRISMS & RETROREFLECTORS 13
SPHERICAL LENSES 23
CYLINDRICAL LENSES 63
MULTIELEMENT LENSES 87
MIRRORS 115
BEAMSPLITTERS 161
WAVEPLATES 187
POLARIZATION COMPONENTS 197
ULTRAFAST COMPONENTS 211
FILTERS & ETALONS 229

OPTICAL SHUTTERS

ROTOR DRIVE SHUTTERS 263
STEPPER MOTOR SHUTTERS 273
SOLENOID SHUTTERS 277
SHUTTER ACCESSORIES 285

LIGHT SOURCES

HELIUM NEON LASERS 291
DIODE LASERS 301
DPSS LASERS 309

TECHNICAL GUIDE

OPTICAL COATINGS & MATERIALS A5
MATERIAL PROPERTIES A57
OPTICAL SPECIFICATIONS A83
FUNDAMENTAL OPTICS A93
GAUSSIAN BEAM OPTICS A157
MACHINE VISION GUIDE A173
LASER GUIDE A197

APPENDIX & INDICES A239

We created the IDEX Optics & Photonics Marketplace to bring you an optimal way to shop for high-performance standard and semi-custom optical components and lasers. Our goal is to make it easy to find what you need, easy to place an order or request a custom quote, and rapid delivery of a subset of commonly used components. You have access to all of the well-known and respected brands within the IDEX Optics & Photonics portfolio, offering best-in-class performance, value and reliability. Our technical and applications support staff, strategically located around the world, are ready, willing and able to answer your questions, backed by more than 45 years of expertise and know how.

Our Family of Brands

ADVANCED THIN FILMS

Our sophisticated metrology and proprietary coating software allow us to reliably manufacture ultra-high-performance laser optics and thin film coatings for low-loss optical components such as high energy beamsplitter cubes, high power laser mirrors, polarizers, zero-order waveplates, assemblies, and micro-optics. We offer custom coatings on customer provided substrates that offer ultra-high LDT and consistent performance with the option of our patented CADB™ ion bonding technology.
ATF-PPC.com

At CVI Laser Optics, we specialize in the design and manufacture of high performance optical components for use in laser systems from the UV to the near-IR. Combining substrate manufacturing and thin-film coating services with advanced metrology offers exceptional performance in our optical assemblies and subsystems, including spherical components, flats, polarization control, prisms and waveplates. We also provide a large offering of semi-custom catalog products.
CVILaserOptics.com

Our years of experience and highly collaborative design process provide optimally designed solutions ranging from diode and helium neon lasers and light engines, to optical components, precision lens assemblies and turnkey optical systems and shutters. Our custom-oriented design approach is straightforward: We consider the customer requirements first and configure the most streamlined, high-performance path to deliver the light you need.
MellesGriot.com

We develop and manufacture innovative, spectrally complex optical filters for general fluorescence and laser applications for the biotech and analytical instrumentation markets. We have remained an industry leader known for proven reliability, unparalleled performance and batch-to-batch repeatability. Our online toolbox, LightSuite, offers optical designers and end-users a way to evaluate filters and performance on the fly. An extensive inventory of in-stock catalog filters, such as hard-coated band pass filters, beamsplitters and laser mirrors, all carry our 10 year warranty.
Semrock.com

HOW TO BUILD AND ORDER A SEMI-CUSTOM PART

On Our Website

IDEX Optics & Photonics Marketplace offers the option of semi-customization for a large number of our CVI Laser Optics laser optics and lenses. We've also improved this system online.

1. Look for the orange semi-custom icon whenever a part is available to order in the main product listing.
2. Select the Semi Custom tab on the Product Detail page to see all of the available options.
3. Then simply select your requirements from the drop down menus for an instant part number and add to Cart!

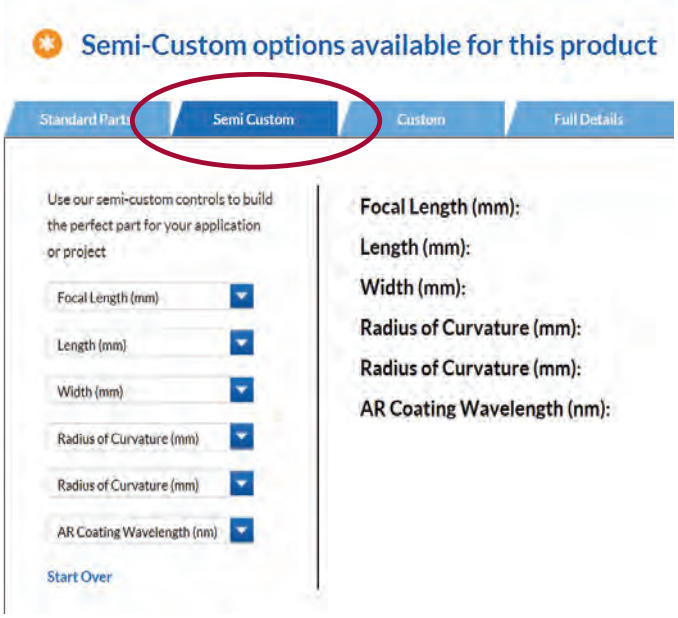

From The Catalog

When using this catalog option, please follow the color coded selection menus to select from the available options for each part code. Each step builds that section of the custom part code that you will use to place your order.

1. Start with your base product code (blue section)
2. Next, select your center wavelength number (red section)
3. Keep moving down the selections in order until you have completed all available fields.

Semi Custom

Use the selection menu below to build your own part

YOUR CUSTOM PART NUMBER TLMB — 800 — 45 — 1025

PRODUCT CODE

TLMB

WAVELENGTH (nm)

800

ANGLE OF INCIDENCE in Degrees

0	Normal incidence
45	45 degrees

SIZE CODE	Diameter (mm)	Thickness (mm)
2506M	25.0	6.0
1025	25.4	6.35
5010M	50.0	10.0

WINDOWS & OPTICAL FLATS

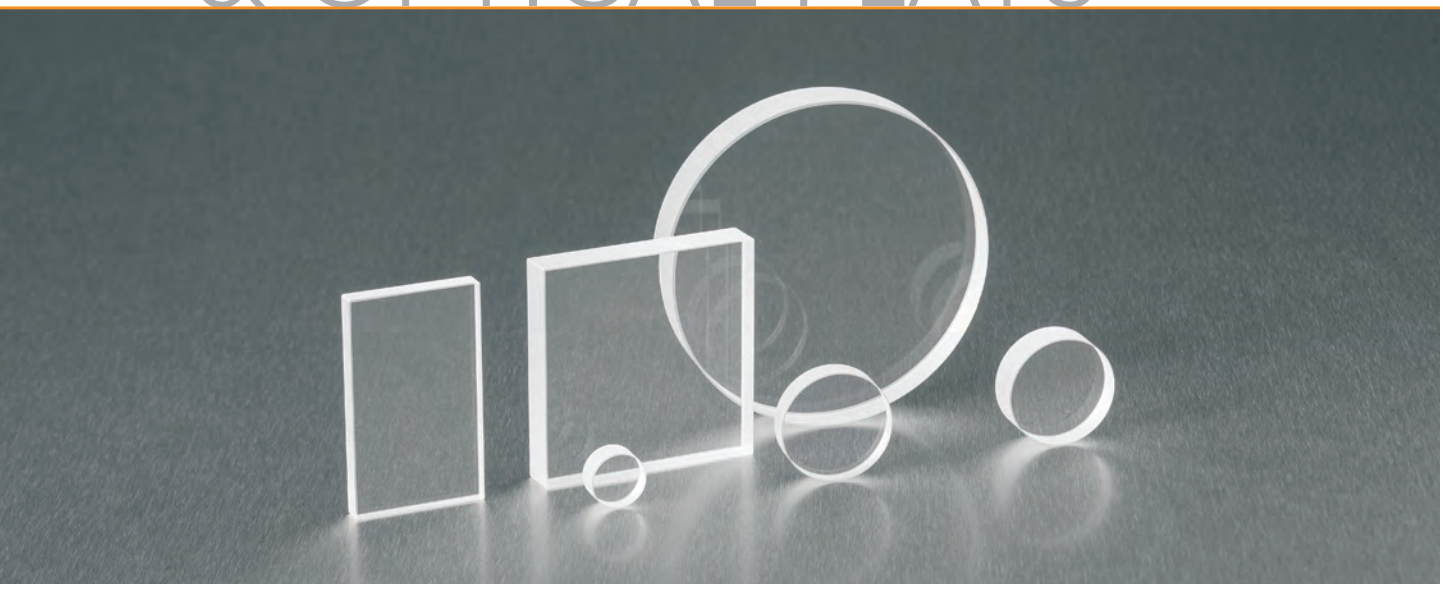

CVI Laser Optics manufactures a wide variety of optical windows. When you need to separate one optical environment from another, sample, split or steer a beam, we have a window that will meet your needs. By offering a wide selection of AR coatings, shapes and wedge options with high Laser Damage Thresholds, our windows will reliably deliver the exact optical performance your application requires.

Please see Pg. IV for the Semi Custom Selection Guide.

SELECTION GUIDE 2
ANTIREFLECTION COATED WINDOWS 3
PLANE PARALLEL WINDOWS 6
SQUARE WINDOWS 8
RECTANGULAR WINDOWS 9
WEDGE WINDOWS 10

SELECTION GUIDE

Product Type	Descripton	Page
ANTIREFLECTION COATED WINDOWS 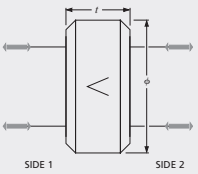	Antireflection coated parallel windows feature low distortion, low scatter and excellent parallelism. A surface flatness of λ/10 and scratch-dig of 10-5 offer high beam control for demanding laser applications.	3
PLANE PARALLEL LASER GRADE WINDOWS 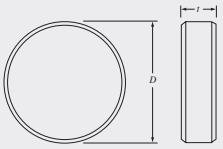	PW1 windows are polished on two sides, with a wedge of ≤10 arc seconds, and are manufactured to handle high power applications. They form the foundation for several coated products, such as W1,W2, beamsplitters, output couplers, harmonic separators, dichroic mirrors, and partial reflectors.	6
SQUARE WINDOWS 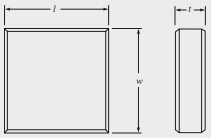	SQW series square windows are designed for a wide variety of laser window and beamsplitting applications. Typical transmitted wavefront error is less than λ/10 peak-to-valley @ 633 nm over 85% of the window's dimension.	8
RECTANGULAR WINDOWS 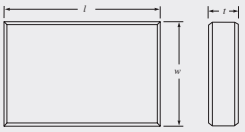	RW series rectangular windows are designed for a wide variety of laser window and beamsplitting applications. Typical transmitted wavefront error is less than λ/10 peak-to-valley @ 633 nm over 85% of the window's dimension.	9
WEDGE WINDOWS 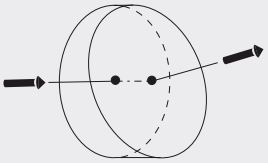	Wedge windows or prisms deviate an incident beam at a precise angle. Two wedge prisms of equal power can be combined to create a beam-steering apparatus that can place a beam anywhere within a cone defined by the deviation angle.	10

IDEX OPTICS & PHOTONICS MARKETPLACE

ANTIREFLECTION COATED LASER WINDOWS

Antireflection coated parallel windows are made from UV grade Fused Silica and feature low distortion: low scatter and excellent parallelism. A surface flatness of λ/10 and scratch-dig of 10-5 offer low scatter and high beam control for demanding laser applications.

- Sample-cell and vacuum-chamber windows
- Output couplers for high-gain lasers
- Achromatic beam sampling by using Fresnel reflection from uncoated surface
- R ≈ 4% at normal incidence
- R_s ≈ 10% at 45° for *s*-polarization
- R_p ≈ 1% at 45° for *p*-polarization
- For non-standard, low-loss, high-damage-threshold AR coatings, wavelengths or substrate options please contact our sales group for availablity.

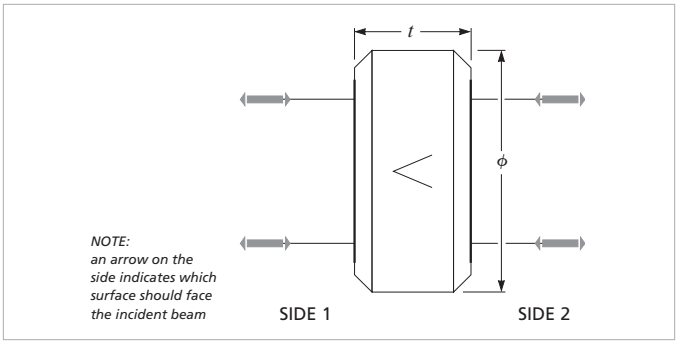

Antireflection coated window layout

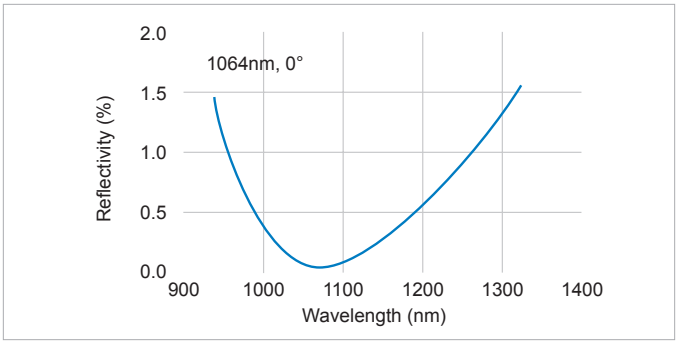

Reflectivity vs. wavelength of 1064 nm V-type AR coating

Specifications

Product Code: W1, W2

Antireflection Coating Single wavelength:
R≤0.25% per surface @ 0°
R≤0.75% per surface @ 45°UNP
R≤1.30% per surface @ 45°S
R≤0.25% per surface @ 45°P

Antireflection Coating Broadband AR:
Ravg≤0.50% per surface @ 0°
R≤1.50% per surface @ 45°UNP
R≤3.0% per surface @ 45°S
R≤0.50% per surface @ 45°P

Antireflection Coating Dual wavelength:
R≤0.30% at 1064 nm @ 0°
R≤0.60% at 532 nm @ 0°

Coating Technology: Electron Beam Multilayer Dielectric

Adhesion and Durability: Per MIL-C-675C. Insoluble in lab solvents.

Clear Aperture: ≥85% of central diameter

Angle of Incidence: User specified

Damage Threshold Pulsed:
Single wavelength: 15 J/cm2, 20 nsec, 20 Hz @ 1064 nm
Broadband: 10 J/cm2, 20 nsec, 20 Hz @ 1064 nm
Dual wavelength: 5 J/cm2, 20 nsec, 20 Hz @ 532 nm, 10 J/cm2, 20 nsec, 20 Hz @ 1064 nm

Damage Threshold Continuous Wave:
1 MW/cm2 @ 1064 nm

Optical Material: UV-grade fused silica

Transmitted Wavefront Error: λ/10 @ 633 nm

Surface Quality: 10-5 scratch and dig

Diameter: Ø+0/–0.25 mm

Thickness: t±0.25 mm

Wedge: ≤ 10 arc sec or 30±5 arc min

Chamfer: Ø ≤50.8 mm: 0.35 mm @ 45°,
Ø > 50.8 mm: 0.85 mm @ 45°

Standard Products

Wavelength or Wavelength Range (nm)	Reflectance per coated surface (%)	Optimized Angle of Incidence (degrees)	Ø (mm)	t (mm)	Wedge α	PART NUMBER
Antireflection Coated Windows, Laser Line (Both Surfaces Coated)						
193.0	R≤0.25%	0°	25.4	6.35	≤10 arc sec	W2-PW1-1025-UV-193-0
248.0	R≤0.25%	0°	25.4	6.35	≤10 arc sec	W2-PW1-1025-UV-248-0
266.0	R≤0.25%	0°	25.4	6.35	≤10 arc sec	W2-PW1-1025-UV-266-0
355.0	R≤0.25%	0°	25.4	6.35	≤10 arc sec	W2-PW1-1025-UV-355-0
532.0	R≤0.25%	0°	25.4	6.35	≤10 arc sec	W2-PW1-1025-UV-532-0
633.0	R≤0.25%	0°	25.4	6.35	≤10 arc sec	W2-PW1-1025-UV-633-0
800.0	R≤0.25%	0°	25.4	3.175	≤10 arc sec	W2-PW1-1012-UV-800-0
800.0	R≤0.25%	0°	50.8	6.35	≤10 arc sec	W2-PW1-2025-UV-800-0
1030.0	R≤0.25%	0°	25.4	6.35	≤10 arc sec	W2-PW1-1025-UV-1030-0
1064.0	R≤0.25%	0°	12.7	6.35	≤10 arc sec	W2-PW1-0525-UV-1064-0
1064.0	R≤0.25%	0°	25.4	6.35	≤10 arc sec	W2-PW1-1025-UV-1064-0
1064.0	R≤0.25%	0°	50.8	6.35	≤10 arc sec	W2-PW1-2025-UV-1064-0
1064.0 & 532.0	R≤0.30% at 1064 nm and R≤0.60% at 532 nm	0°	25.4	6.35	≤10 arc sec	W2-PW1-1025-UV-1064/532-0
1550.0	R≤0.25%	0°	25.4	6.35	≤10 arc sec	W2-PW1-1025-UV-1550-0
Antireflection Coated Wedge Windows, Laser Line (Both Surfaces Coated)						
266.0	R≤0.25%	0°	25.4	6.35	30±5 arc min	W2-IF-1025-UV-266-0
355.0	R≤0.25%	0°	25.4	6.35	30±5 arc min	W2-IF-1025-UV-355-0
532.0	R≤0.25%	0°	25.4	6.35	30±5 arc min	W2-IF-1025-UV-532-0
633.0	R≤0.25%	0°	25.4	6.35	30±5 arc min	W2-IF-1025-UV-633-0
1030.0	R≤0.25%	0°	25.4	6.35	30±5 arc min	W2-IF-1025-UV-1030-0
1064.0	R≤0.25%	0°	25.4	6.35	30±5 arc min	W2-IF-1025-UV-1064-0
Antireflection Coated Wedge Windows, Broadband (Both Surfaces Coated)						
248.0 – 355.0	R_{avg}≤0.50%, R_{abs}≤1.0%	0°	25.4	6.35	30±5 arc min	W2-IF-1025-UV-248-355-0
355.0 – 532.0	R_{avg}≤0.50%, R_{abs}≤1.0%	0°	25.4	6.35	30±5 arc min	W2-IF-1025-UV-355-532-0
415.0 – 700.0	R_{avg}≤0.50%, R_{abs}≤1.0%	0°	25.4	6.35	30±5 arc min	W2-IF-1025-UV-415-700-0
633.0 – 1064.0	R_{avg}≤0.50%, R_{abs}≤1.0%	0°	25.4	6.35	30±5 arc min	W2-IF-1025-UV-633-1064-0
700.0 – 900.0	R_{avg}≤0.25%, R_{abs}≤0.50%	0°	25.4	6.35	30±5 arc min	W2-IF-1012-UV-700-900-0
1050.0 – 1600.0	R_{avg}≤0.50%, R_{abs}≤1.0%	0°	25.4	6.35	30±5 arc min	W2-IF-1025-UV-1050-1600-0
Antireflection Coated Windows, Broadband (Both Surfaces Coated)						
248.0 – 355.0	R_{avg}≤0.50%, R_{abs}≤1.0%	0°	25.4	6.35	≤10 arc sec	W2-PW1-1025-UV-248-355-0
355.0 – 532.0	R_{avg}≤0.50%, R_{abs}≤1.0%	0°	25.4	6.35	≤10 arc sec	W2-PW1-1025-UV-355-532-0
415.0 – 700.0	R_{avg}≤0.50%, R_{abs}≤1.0%	0°	25.4	6.35	≤10 arc sec	W2-PW1-1025-UV-415-700-0
633.0 – 1064.0	R_{avg}≤0.50%, R_{abs}≤1.0%	0°	25.4	6.35	≤10 arc sec	W2-PW1-1025-UV-633-1064-0
700.0 – 900.0	R_{avg}≤0.25%, R_{abs}≤0.50%	0°	25.4	3.175	≤10 arc sec	W2-PW1-1012-UV-700-900-0
1050.0 – 1600.0	R_{avg}≤0.50%, R_{abs}≤1.0%	0°	25.4	6.35	≤10 arc sec	W2-PW1-1025-UV-1050-1600-0

IDEX OPTICS & PHOTONICS MARKETPLACE

Semi Custom Use the selection menu below to build your own part

YOUR CUSTOM PART NUMBER W1 — PW — 1025 — UV — 1064 — 45UNP

PRODUCT CODE

W1	Window, one surface AR coated *
W2	Window, two surfaces AR coated

WEDGE

PW1	<10 arc seconds
IF	30 arc minutes ± 5 arc minutes

SIZE CODE	DIAMETER (mm)	THICKNESS (mm)	STANDARD OPTIONS
0512	12.7	3.175	Flat and Wedge
0525	12.7	6.35	Flat and Wedge
0725	19.05	6.35	Flat and Wedge
2506M	25.0	6.0	Flat only
1004	25.4	1.0	Flat only
1012	25.4	3.175	Flat and Wedge
1025	25.4	6.35	Flat and Wedge
1525	38.1	6.35	Flat and Wedge
5010M	50.0	10.0	Flat only
2025	50.8	6.35	Flat and Wedge
2037	50.8	9.525	Flat and Wedge
3050	76.2	12.7	Flat only
4050	101.6	12.7	Flat only

SUBSTRATE MATERIAL

UV	UV grade fused silica

AR COATING WAVELENGTH nm

193	**355**	**633**	**808**	**1053**
248	**355-532**	**633-1064**	**830**	**1064**
266	**415-700**	**700-900**	**1030**	**1064/532**
248-355	**527**	**780**	**1047**	**1070**
351	**532**	**800**	**1050-1600**	**1550**

ANGLE OF INCIDENCE IN DEGREES WITH POLARIZATION

0	Normal incidence
45S	45 degrees *s*-polarization
45P	45 degrees *p*-polarization
45UNP	45 degrees Unpolarized

* Interferometer Windows (30 minute wedge) and Large Wedge Windows (≥1.0°) that have one surface antireflection coated will have the normal incidence surface coated as standard. If you require the wedge surface coated, please add the extension "-WEDGE". An example would be part description W1-IF-1025-UV-1064-45UNP-WEDGE.

CVI Laser Optics

LASER GRADE PLANE PARALLEL WINDOWS, ≤10 ARC SECONDS

PW1 windows are polished on two sides, with a wedge of ≤10 arc seconds and are manufactured to handle high power applications. They form the foundation for several coated products, such as W1, W2, beamsplitters, output couplers, harmonic separators, dichroic mirrors, and partial reflectors.

- Extremely parallel wedge
- ≤10 seconds of arc
- Minimal angular deviation of transmitted beam
- Minimum misalignment errors when window is repeatedly inserted and removed

Specifications

Product Code: PW1

Optical Material: UV-grade fused silica or N-BK7 glass

Diameter: Ø+0/–0.25 mm

Thickness: t±0.25 mm

Wedge: ≤10 arc sec

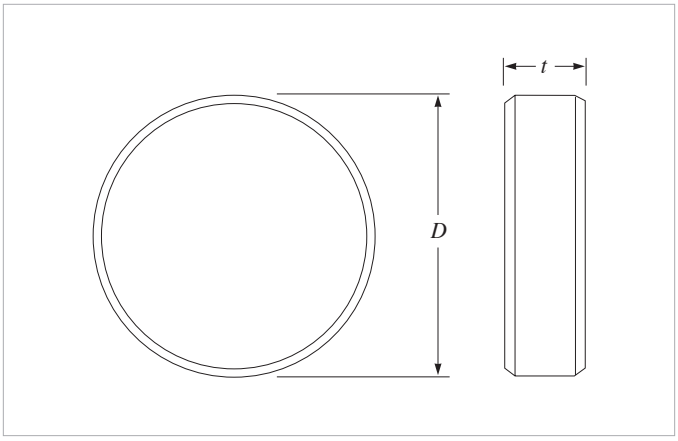

Window dimensions layout

IDEX OPTICS & PHOTONICS MARKETPLACE

Standard Products

Ø (mm)	t (mm)	Transmitted Wavefront Error @ 633 nm	Surface Quality	PART NUMBER
Laser Grade Windows, ≤10 arc seconds, Fused Silica				
10.0	3.175	λ/10	10-5	PW1-0412-UV
12.7	1.0	λ/4	10-5	PW1-0504-UV
12.7	2.0	λ/10	10-5	PW1-0508-UV
12.7	3.175	λ/10	10-5	PW1-0512-UV
12.7	6.35	λ/10	10-5	PW1-0525-UV
19.1	3.175	λ/10	10-5	PW1-0712-UV
19.1	6.35	λ/10	10-5	PW1-0725-UV
25.0	6.0	λ/10	10-5	PW1-2506M-UV
25.4	1.0	λ/10	10-5	PW1-1004-UV
25.4	2.0	λ/10	10-5	PW1-1008-UV
25.4	3.175	λ/10	10-5	PW1-1012-UV
25.4	6.35	λ/10	10-5	PW1-1025-UV
25.4	9.525	λ/10	10-5	PW1-1037-UV
38.1	3.175	λ/10	10-5	PW1-1512-UV
38.1	6.35	λ/10	10-5	PW1-1525-UV
50.0	10.0	λ/10	10-5	PW1-5010M-UV
50.8	6.35	λ/10	10-5	PW1-2025-UV
50.8	9.525	λ/10	10-5	PW1-2037-UV
76.2	12.7	λ/10	10-5	PW1-3050-UV
101.6	12.7	λ/10	10-5	PW1-4050-UV
152.4	25.4	λ/10	10-5	PW1-6010-UV
Laser Grade Windows, ≤10 arc seconds, N-BK7				
12.7	3.175	λ/10	10-5	PW1-0512-C
12.7	6.35	λ/10	10-5	PW1-0525-C
25.0	6.0	λ/10	10-5	PW1-2506M-C
25.4	3.175	λ/10	10-5	PW1-1012-C
25.4	6.35	λ/10	10-5	PW1-1025-C
50.0	10.0	λ/10	10-5	PW1-5010M-C
50.8	6.35	λ/4	10-5	PW1-2025-C
50.8	9.525	λ/10	10-5	PW1-2037-C

CVI Laser Optics

LASER GRADE SQUARE WINDOWS

SQW series square windows are designed for a wide variety of laser window and beamsplitting applications. Typical transmitted wavefront error is less than λ/10 peak-to-valley @ 633 nm over 85% of the window's dimension. All CVI Laser Optics dielectric and metal coatings can be deposited on SQW series square windows.

- For coating options please contact our sales group for availablity

Specifications

Product Code: SQW

Optical Material: UV-grade fused silica, or N-BK7 glass

Transmitted Wavefront Error: λ/10 @ 633 nm

Surface Quality: 10-5 scratch and dig

Dimensional Tolerance: +0/–0.25 mm

Thickness: t ± 0.25 mm

Wedge: ≤5 arc min

Clear Aperture: ≥85% of central dimension

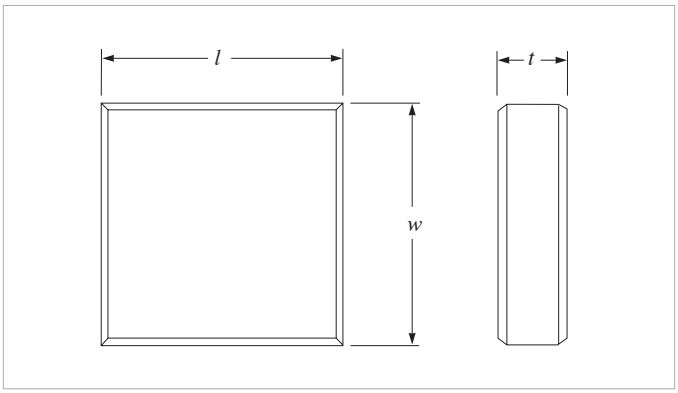

Window dimensions layout

Standard Products

l (mm)	t (mm)	Transmitted Wavefront Error @ 633 nm	PART NUMBER
Laser Grade Square Windows, Fused Silica			
12.7	6.4	λ/10	SQW-0525-UV
25.4	6.4	λ/10	SQW-1025-UV
50.8	9.5	λ/10	SQW-2037-UV
Laser Grade Square Windows, N-BK7			
12.7	6.4	λ/10	SQW-0525-C
25.4	6.4	λ/4	SQW-1025-C

IDEX OPTICS & PHOTONICS MARKETPLACE

CVI Laser Optics

LASER GRADE RECTANGULAR WINDOWS

RW series rectangular windows are designed for a wide variety of laser window and beamsplitting applications. All CVI Laser Optics dielectric and metal coatings can be deposited on RW series rectangular windows. Typical transmitted wavefront error is less than λ/10 peak-to-valley @ 633 nm over 85% of the window's dimension

- For coating options please contact our sales group for availablity

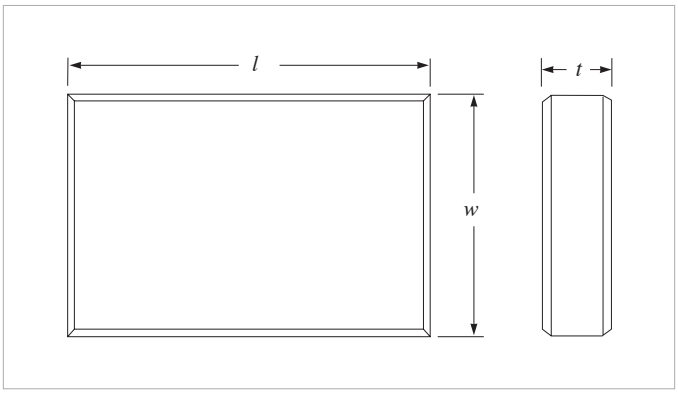

Window dimensions layout

Specifications

Product Code: RW

Optical Material: UV-grade fused silica, or N-BK7 glass

Transmitted Wavefront Error: λ/10 @ 633 nm

Surface Quality: 10-5 scratch and dig

Dimensional Tolerance: +0/–0.25 mm

Thickness: t±0.25 mm

Wedge: ≤5 arc min

Clear Aperture: ≥85% of central dimension

Standard Products

l (mm)	w (mm)	t (mm)	PART NUMBER
Fused Silica			
28.6	14.3	3.2	RW-28.6-14.3-3.18-UV
40.0	30.0	5.0	RW-40.0-30.0-5.00-UV
N-BK7			
28.6	14.3	3.2	RW-28.6-14.3-3.18-C
40.0	30.0	5.0	RW-40.0-30.0-5.00-C

CVI Laser Optics

INTERFEROMETER FLATS

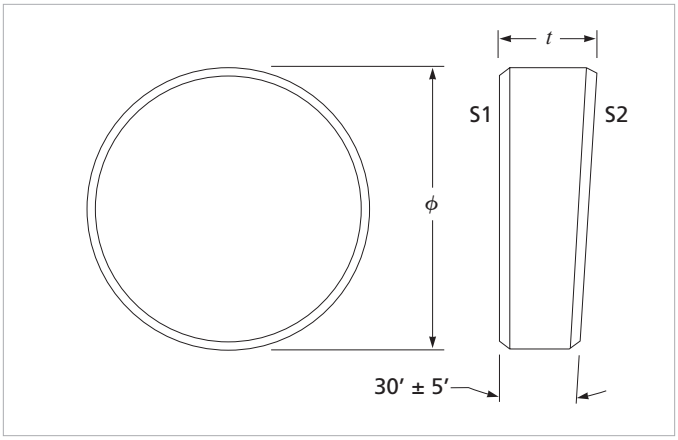

Interferometer flats have an arrow marked at the thickest edge and points towards side 1 (S1). Side 1 (S1) is at normal incidence and side 2 (S2) is the wedge surface.

IF is an uncoated window substrate, polished on two sides, with a wedge of 30 ± 5 arc minutes. Therefore, they form the foundation for several coated products, such as W1, W2, beamsplitters, output couplers, harmonic separators, dichroic mirrors, and partial reflectors.

- 30-minute wedge minimizes interference effects between surfaces
- Reflected beams from both surfaces separately usable
- Output coupler, beamsplitter, or beam sampling substrate
- λ/10 transmitted wavefront, 10-5 surface quality

Specifications

Product Code: IF

Optical Material: UV-grade fused silica, or N-BK7 glass

Transmitted Wavefront Error: λ/10 @ 633 nm

Surface Quality: 10-5 scratch and dig

Diameter: Ø+0/–0.25 mm

Thickness: t±0.25 mm

Wedge: 30 ±5 minutes

Clear Aperture: ≥85% of central diameterØ

Standard Products

Ø (mm)	t (mm)	PART NUMBER
Interferometer Flats, Fused Silica		
12.7	3.2	IF-0512-UV
12.7	6.4	IF-0525-UV
19.1	6.4	IF-0725-UV
25.4	3.2	IF-1012-UV
25.4	6.4	IF-1025-UV
50.8	6.4	IF-2025-UV
50.8	9.5	IF-2037-UV
76.2	12.7	IF-3050-UV
101.6	12.7	IF-4050-UV
Interferometer Flats, N-BK7		
12.7	6.4	IF-0525-C
25.4	6.4	IF-1025-C

IDEX OPTICS & PHOTONICS MARKETPLACE

LARGE WEDGE WINDOWS

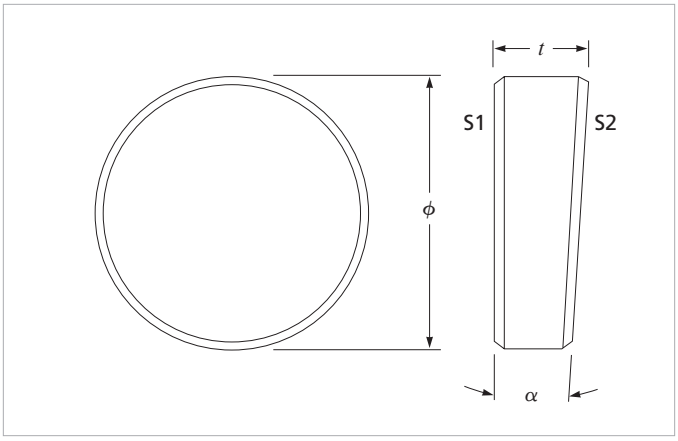

Large wedge windows have an arrow marked at the thickest edge and points towards side 1 (S1). Side 1 (S1) is at normal incidence and side 2 (S2) is the wedge surface.

Large wedge windows are laser quality windows manufactured with wedges of 1°or 3°. These larger wedges prevent interference by stray back reflection and have several applications in beam steering.

- All CVI Laser Optics low loss, high energy AR coatings available
- Other dimension, wedge or material options available for OEM applications

Specifications

Product Code: LW

Optical Material: UV-grade fused silica or N-BK7 glass

Transmitted Wavefront Error: λ/10 @ 633 nm

Surface Quality: 10-5 scratch and dig

Diameter: Ø+0/–0.25 mm

Thickness: t±0.25 mm

Wedge: ±6 minutes

Clear Aperture: ≥85% of central diameter

Standard Products

Ø	t (mm)	Wedge α	PART NUMBER
Large Wedge Windows, Fused Silica			
25.4	9.5	1°	LW-1-1037-UV
50.8	9.5	1°	LW-1-2037-UV
25.4	9.5	3°	LW-3-1037-UV
50.8	9.5	3°	LW-3-2037-UV
76.2	12.7	3°	LW-3-3050-UV
Large Wedge Windows, N-BK7			
25.4	9.5	1°	LW-1-1037-C
50.8	9.5	1°	LW-1-2037-C
25.4	9.5	3°	LW-3-1037-C
50.8	9.5	3°	LW-3-2037-C

APPLICATION NOTE

Using Large Wedge Windows

For small angles of incidence, the deviation of a ray incident on a wedged window with wedge angle α is

$$\theta_d = \frac{\eta_s}{\eta_a}\alpha$$

The first reflected ray is misaligned from the initial axis by an angle defined by

$$\theta_r = \frac{2\eta_s\alpha}{\eta_a}$$

If $\eta_a = 1$, then $\theta_r = 2\eta_s\alpha$.

When using a wedge as an output coupling mirror in a laser, usually the front surface is coated with the partially reflecting coating and the second surface with an antireflection coating. In very high gain or very sensitive lasers, it is important to completely misalign the beam coming from the second surface. CVI Laser Optics can provide mirrors and beamsplitters where α is between 0.5° (IF Series) and 3° (LW Series) to prevent this stray feedback.

To create an adjustable beamsteering device, use a pair of identically wedged windows (see Figure 2). Any deflection angle from 0 to 2θ, can be obtained by suitable rotation of the individual wedges. The resulting deflection can be positioned anywhere within a cone centered on the original propagation direction. The direction of deflection is along a plane midway between the rotation angles of the two individual prisms. The magnitude of deflection varies smoothly from the maximum value 2θ where the thinnest points of the two wedges coincide to zero to when the two wedges are oriented antiparallel, thereby canceling each other.

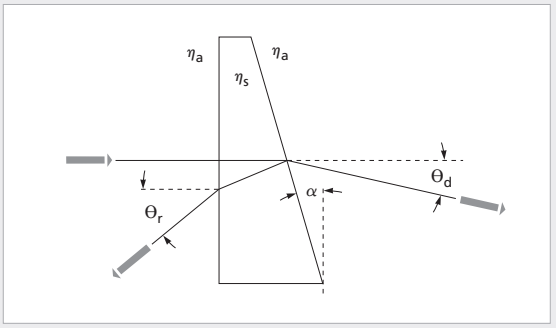

Figure 1. Deviation and reflection of beam by a wedged window of wedge α

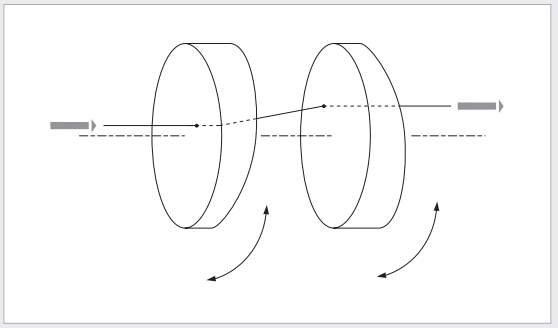

Figure 2. A beamsteering wedge formed from two wedged prisms

IDEX OPTICS & PHOTONICS MARKETPLACE

PRISMS & RETROREFLECTORS

CVI Laser optics manufactures a large selection of high quality prisms and retroreflectors for use in many applications including diverse industrial and scientific uses, laser tracking and alignment, spectroscopy, and military applications such as range finding and atmospheric monitoring. The CVI prism and retroreflector offering includes wedge prisms, right-angle prisms, Pellin Broca prisms and dispersing prisms. Standard products are available in UV-grade fused silica and N-BK7 glass, and depending on your application, can be coated with one of our many available anti-reflection coatings. Custom dimensions and coatings are available for OEM applications. We encourage you to contact CVI Laser Optics directly for more information.

Please see Pg. IV for the Semi Custom Selection Guide.

SELECTION GUIDE 14
WEDGED PRISMS 15
RIGHT-ANGLE PRISMS 16
EQUILATERAL DISPERSING PRISMS 20
ISOSCELES DISPERSING PRISMS 21
PELLIN BROCA PRISMS 22

SELECTION GUIDE

Product Type	Descripton	Page
WEDGE WINDOWS OR PRISMS 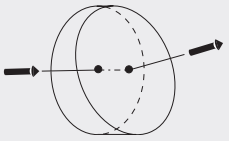	Wedge windows or prisms deviate an incident beam at a precise angle. Two wedge prisms of equal power can be combined to create a beam-steering apparatus that can place a beam anywhere within a cone defined by the deviation angle.	15
RIGHT-ANGLE PRISMS 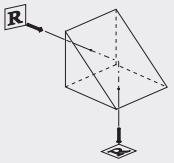	Right-angle prisms bend the image by 90° and invert the image. Right-angle prisms may also be used to retroreflect a collimated beam (bend the image 180°).	16
EQUILATERAL DISPERSING & ISOSCELES BREWSTER PRISMS 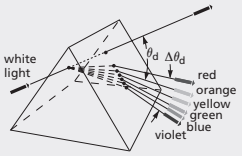	Dispersing prisms are used to separate a beam of white light into its component colors. Generally, the light is first collimated and then dispersed by the prism. A spectrum is then formed at the focal plane of a lens or curved mirror. The dispersion of an iscosceles Brewster prism is less than that of an equilateral prism.	20
PELLIN BROCA PRISMS 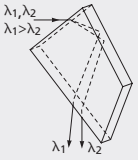	In a Pellin Broca prism, light enters the right-angle prism normal to one of its faces, is turned exactly 90°, is presented to the second "half" dispersing prism in minimum deviation, and hence exits the Pellin Broca prism deviated at exactly 90° to its initial direction. This is what is meant by calling the Pellin Broca prism a "constant deviation prism".	22

IDEX OPTICS & PHOTONICS MARKETPLACE

LARGE WEDGE WINDOWS

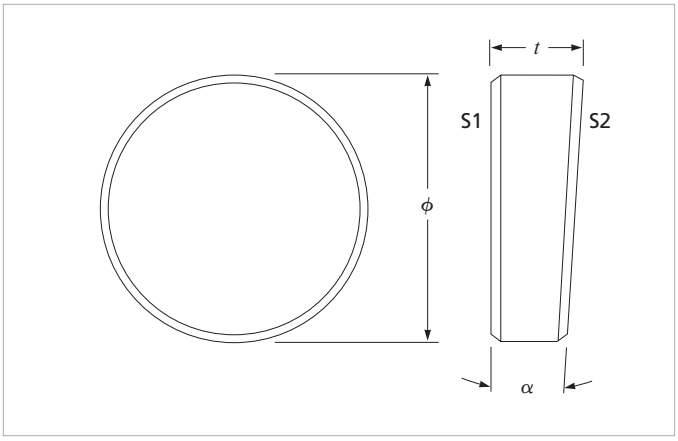

Large wedge windows have an arrow marked at the thickest edge which points towards side 1 (S1). Side 1 (S1) is at normal incidence and side 2 (S2) is the wedge surface.

Large wedge windows are laser quality windows manufactured with wedge angles of 1° or 3°. These larger wedges prevent interference due to stray back reflection. They have several applications in beam steering.

- All CVI Laser Optics low loss, high energy AR coatings available
- Other dimensions, wedge or material options available for OEM applications

Specifications

Product Code: LW-C • LW-UV

Optical Material: N-BK7 glass or UV-grade fused silica

Transmitted Wavefront Error: λ/10 @ 633 nm

Surface Quality: 10-5 scratch and dig

Diameter: Ø+0/–0.25 mm

Thickness: t±0.25 mm

Wedge: ±6 minutes

Clear Aperture: ≥85% of central diameter

Standard Products

Ø (mm)	t (mm)	Wedge α	PART NUMBER
Large Wedge Windows, N-BK7			
25.4	9.5	1°	LW-1-1037-C
50.8	9.5	1°	LW-1-2037-C
25.4	9.5	3°	LW-3-1037-C
50.8	9.5	3°	LW-3-2037-C
Large Wedge Windows, Fused Silica			
25.4	9.5	1°	LW-1-1037-UV
50.8	9.5	1°	LW-1-2037-UV
25.4	9.5	3°	LW-3-1037-UV
50.8	9.5	3°	LW-3-2037-UV
76.2	12.7	3°	LW-3-3050-UV

CVI Laser Optics

RIGHT-ANGLE PRISMS

Right-angle prisms can be used to direct a beam of light at 90° from the incident beam or to retroreflect a beam. A right-angle prism may also be used as a front surface mirror.

- 90° reflector uses the hypotenuse face in total internal reflection (TIR) and an antireflection coating on the square faces (legs).
- 180° retroreflectors uses the square faces (legs) in total internal reflection (TIR) with an antireflection coating on the hypotenuse face.
- The prism can be used as an internal or external mirror by specifying a dielectric or metallic coating on the hypotenuse.

Most of the CVI Laser Optics coatings can be applied to prism surfaces.

APPLICATION NOTE

Right-Angle Prism as a Mirror (90° Bending)

The inherent total internal reflection (TIR) at the hypotenuse inverts the image and achieves a 90° change in direction. Antireflection coatings are applied to the two legs of a standard right angle prism (RAP) to maximize the overall throughput and reduce back-reflections off the interfaces to near zero.

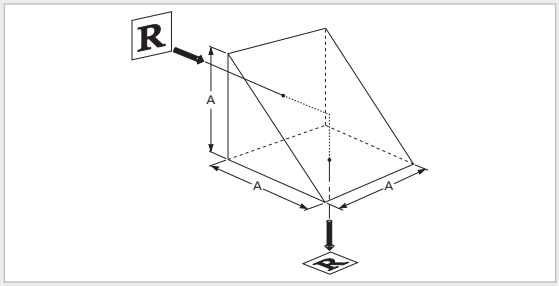

Right-Angle Prism as a Retroreflector (180° Folding)

The inherent total internal reflection (TIR) at the leg faces to achieve a 180° change in direction (i.e., retroreflection). Antireflection coatings are applied to the hypotenuse of a standard right angle prism (RAP) to maximize the overall throughput and reduce any back-reflection off the 0° interface.

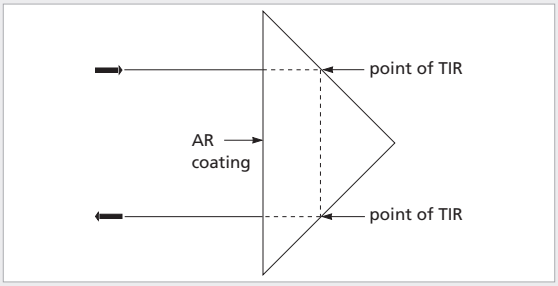

IDEX OPTICS & PHOTONICS MARKETPLACE

UNCOATED RIGHT-ANGLE PRISMS

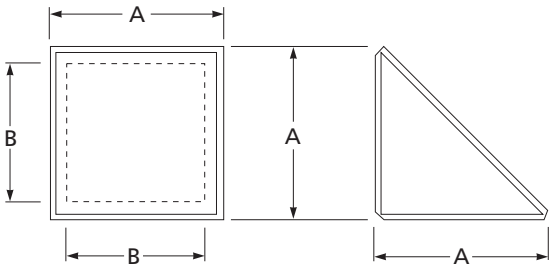

Dimension A is to Theoretical Sharp

Uncoated right-angle prisms

Right angle prisms (RAP) are most commonly used for image rotation, redirection of light and as components for both polarizing and non-polarizing beamsplitter cubes. Because of their simple 45°-45°-90° design and high-quality surface polish, they can be used as high energy 90° bending prisms or 180° folding prisms. They can be antireflection coated in these applications to increase overall transmission, or metal coated for use as external turning mirrors.

- Contact CVI Laser Optics for other dimensions or material options for OEM applications

Specifications

Product Code: RAP-C • RAP-UV

Optical Material: N-BK7 glass or UV-grade fused silica

Dimensional Tolerance: +0/–0.25 mm

Angular Deviation: ±3 arc min

Chamfer: 0.35 mm at 45° (typical)

Adhesion and Durability: Per MIL-C-675C. Insoluble in lab solvents.

Standard Products

Surface Figure	Surface Quality	Optical Material	A (mm)	Clear Aperture B (mm)	PART NUMBER
Uncoated Right-Angle Prisms, N-BK7					
λ/4	20-10	N-BK7	5.0	3.0	RAP-020-C
λ/4	20-10	N-BK7	10.0	8.0	RAP-040-C
λ/4	20-10	M N-BK7	12.7	10.8	RAP-050-C
λ/4	20-10	N-BK7	15.0	12.8	RAP-060-C
λ/4	20-10	N-BK7	20.0	17.0	RAP-080-C
λ/4	20-10	N-BK7	25.4	21.6	RAP-100-C
λ/2	60-40	N-BK7	40.0	36.0	RAP-157-C
Uncoated Right-Angle Prisms, Fused Silica					
λ/10	10-5	Fused Silica	10.0	8.0	RAP-040-UV
λ/10	10-5	Fused Silica	12.7	10.8	RAP-050-UV
λ/10	10-5	Fused Silica	25.0	21.0	RAP-090-UV
λ/10	10-5	Fused Silica	25.4	21.6	RAP-100-UV

Specifications

Product Code: P90-C • P90-UV • P180-C • P180-UV

Optical Material: N-BK7 glass or UV-grade fused silica

Surface Figure:
N-BK7: λ/4 p-v at 633 nm before coating
Fused silica: λ/10 p-v at 633 nm before coating

Surface Quality:
N-BK7: 20-10 scratch and dig.
Fused silica: 10-5 scratch and dig

Dimensional Tolerance: +0/–0.25 mm

Angular Deviation: ±3 arc min

Chamfer: 0.35 mm at 45° (typical)

Antireflection Coating:
Single wavelength: R≤0.25% per surface
Broadband: R_{avg}≤0.50% per surface

Coating Technology: Electron beam multilayer dielectric

Clear Aperture: ≥85% of central dimension

Damage Threshold:
Pulsed: 10 J/cm^2, 20 nsec, 20 Hz @ 1064 nm
cw: 10 MW/cm^2 @ 1064 nm

Adhesion and Durability: Per MIL-C-675C. Insoluble in lab solvents

CVI Laser Optics

PRECISION RIGHT-ANGLE BENDING & FOLDING PRISMS

P90 right-angle bending prisms utilize the inherent total internal reflection (TIR) at the hypotenuse to invert the image and achieve a 90° change in direction. Antireflection coatings are applied to the two legs of a standard right angle prism (RAP) to maximize the overall throughput and reduce back-reflections off the interfaces to near zero.

P180 right-angle folding prisms utilize the inherent total internal reflection at the leg faces to achieve a 180° change in direction (i.e., retroreflection). Antireflection coatings are applied to the hypotenuse of a standard right angle prism (RAP) to maximize the overall throughput and reduce any back-reflection off the 0° interface.

Because the internal reflections are independent of wavelength, these prisms can also be used as high energy reflectors for broadband applications where metal mirrors are too absorbing and dielectric mirrors do not reflect a wide enough bandwidth.

Bending and folding prisms are stocked in both N-BK7 glass and UV-grade fused silica on ½-inch and 1-inch standard substrates, but can be made from any available RAP prism.

- Use P90 series 90° bending prisms as broadband, high energy 90° reflectors: CVI Laser Optics high energy AR and BBAR coatings can be applied to legs
- Use P180 series 180° folding prisms as broadband, high-energy retroreflectors : CVI Laser Optics high energy AR and BBAR coatings can be applied to hypotenuse
- Aluminized hypotenuse with black overcoat, other dimensions or wavelengths available for OEM applications

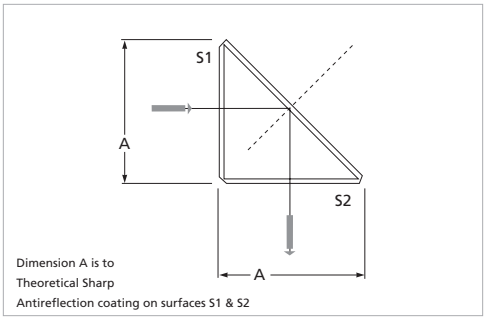

90° bending options

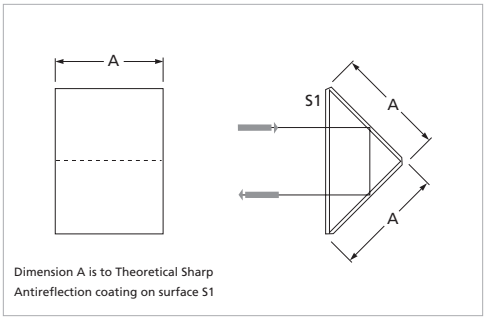

180° bending options

Standard Products

A (mm)	AR Coating Range (nm)	Reflectivity @ 0°	Optical Material	PART NUMBER
Standard Precision Right-Angle Bending Prisms				
12.7	415.0-700.0	R_{avg}≤0.50%, R_{abs}≤1.0% per surface	N-BK7	P90-050-415-700-C
12.7	633.0-1064.0	R_{avg}≤0.50%, R_{abs}≤1.0% per surface	N-BK7	P90-050-633-1064-C
12.7	1064.0	R < 0.25% per surface	N-BK7	P90-050-1064-C
25.4	1064.0	R < 0.25% per surface	N-BK7	P90-100-1064-C
Standard Precision Folding Prisms				
12.7	1064.0	R < 0.25% per surface	N-BK7	P180-050-1064-C
25.4	1064.0	R < 0.25% per surface	N-BK7	P180-100-1064-C

Semi Custom Use the selection menu below to build your own part

YOUR CUSTOM PART NUMBER P90 — 050 — 1064 — C

PRODUCT	
P90	90° bending prism
P180	180° folding prism

SIZE CODE	DIMENSION A (mm) (Theoretical Sharp)
050	12.7
100	25.4

ANTIREFLECTION COATING WAVELENGTH (nm)

193	266	532	1064
248	355	633	1050-1600
248-355	415-700	632-1064	1500

MATERIAL CODE	MATERIAL
C	N-BK7 Glass
UV	UV-grade fused silica

Specifications

Product Code: EDP-C • EDP-UV • EDP-F2

Optical Material: N-BK7, UV-grade fused silica, N-F2 glass

Surface Figure: λ/10 p-v at 633 nm

Surface Quality:
10-5 scratch and dig
(N-BK7 glass and UV-grade fused silica)
30-10 scratch and dig (N-F2 and N-SF10 glass)

Dimensional Tolerance: +0/–0.25 mm

Angular Deviation: ±3 arc min

Chamfer: 0.35 mm at 45° (typical)

Clear Aperture: ≥85% of central dimension

Damage Threshold: 15 J/cm², 20 nsec, 20 Hz @ 1064 nm

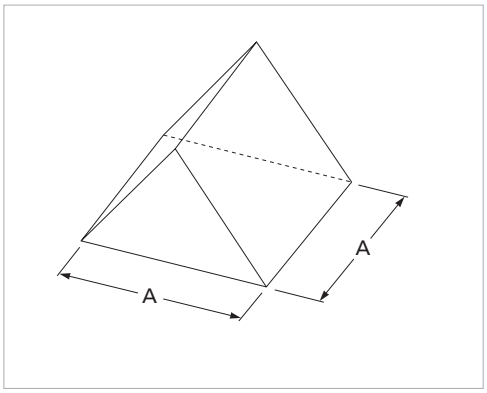

Equilateral dispersing prisms

HIGH-PRECISION EQUILATERAL DISPERSING PRISMS

Equilateral dispersing prisms are used for wavelength-separation applications. A light ray is twice refracted passing through the prism with total deviation denoted by θ_d in the figure below. Deviation is a function of refractive index and hence wavelength. Angular dispersion $\Delta\theta_d$ is the difference in deviation for light rays having different wavelengths, and it varies with prism orientation.

- Reflection losses are minimized for unpolarized rays traveling parallel to the base of the prism. This condition is called minimum deviation.
- Minimum deviation occurs when the ray and wavelength angle of incidence at the entrance surface are equal to the angle of emergence (both angles measured with respect to the surface normals).
- Prisms are available in N-BK7, N-F2 and UV-grade fused silica.
- Antireflection coatings help reduce polarization at the prism surfaces by increasing total transmittance.

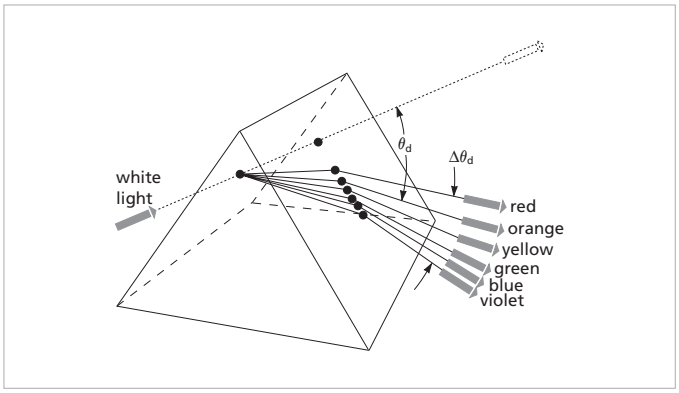

EDP equilateral dispersing prisms use the phenomenon of angular dispersion to allow for wavelength separation

Standard Products

Optical Material	A (mm)	Refractive Index @ 633 nm	PART NUMBER
High-Precision Equilateral Dispersing Prisms			
N-BK7	25.0	1.51509	EDP-25.0-C
Fused Silica	25.0	1.45702	EDP-25.0-UV
N-F2	25.0	1.61658	EDP-25.0-F2

CVI Laser Optics

ISOSCELES BREWSTER PRISMS

Isosceles Brewster angle prisms are designed specifically for intracavity laser applications, usually for specific wavelengths or wavelength ranges. The dispersion of these prisms is less than that of an equilaterial prism, but the beam enters and exits the prism near Brewster's angle, minimizing intracavity losses.

- GDD correction prisms for femtosecond systems
- Two sides (AB) optically polished
- Extremely small loss for *p*-polarized beam
- Other dimensions and materials available for OEM applications

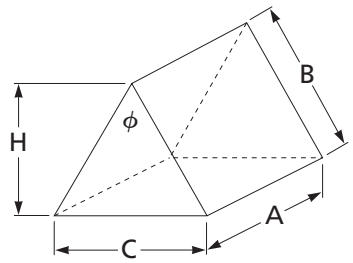

Isosceles Brewster prisms

Specifications

Product Code: IB-SS • IB-UV • IB-SF10

Optical Material: Suprasil 1, UV-grade fused silica or N-SF10 glass

Surface Figure: λ/10 p-v at 633 nm over clear aperture

Surface Quality:
10-5 scratch and dig
(Suprasil 1 and UV-grade fused silica),
30-10 scratch and dig (N-SF10 glass)

Dimensional Tolerance: +0/–0.25 mm

Angular Deviation: ±2 arc min

Chamfer: 0.35 mm at 45° (typical)

Clear Aperture: ≥85% of central dimension

Damage Threshold:
Suprasil 1: 15 J/cm², 20 nsec, 20 Hz @ 1064 nm
Fused Silica: 15 J/cm², 20 nsec, 20 Hz @ 1064 nm

Standard Products

Optical Material	A (mm)	B (mm)	C (mm)	H (mm)	Ø	Refractive Index @ 633 nm	Design Wavelength (nm)	Refractive Index @ Design WL	PART NUMBER
Isosceles Brewster Prisms									
Suprasil 1	12.7	18.2	20.6	15.0	68.7°	1.45702	488	1.46301	IB-15.0-68.7-SS
Fused Silica	15.0	15.0	17.0	12.4	69.1°	1.45702	800	1.45332	IB-12.4-69.1-UV
N-SF10	15.0	15.0	15.1	13.0	60.6°	1.72314	80	0 1.7113	IB-13.0-60.6-SF10
N-SF10	25.0	25.0	25.2	21.6	60.6°	1.72314	800	1.7113	IB-21.6-60.6-SF10

PELLIN BROCA PRISMS

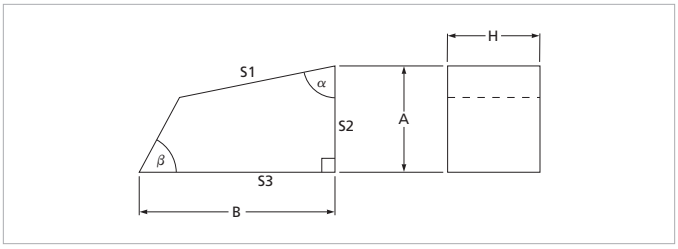

PLBC Pellin Broca prism

In a Pellin Broca prism, an ordinary dispersing prism is split in half along the bisector of the apex angle. Using a right-angle prism, the two halves are joined to create a dispersing prism with an internal right angle bend obtained by total internal reflection. See Figure 1.

A simple dispersing prism always deviates the longer wavelength less than the shorter wavelength. In a Pellin Broca prism, whether the longer wavelength is deviated more or less depends on the orientation of the prism. This is an important consideration when designing a high power Pellin Broca beam separator. This is illustrated in Figures 2 and Figures 3.

- Ideal for 90° wavelength deviation or beam separation
- Suprasil 1 for 180 to 240 nm region
- UV-grade fused silica for 240 to 2000 nm.
- Crystal quartz is specifically designed for high power Q-switched 266 nm laser pulses above fluence levels of 50 mJ/cm^2

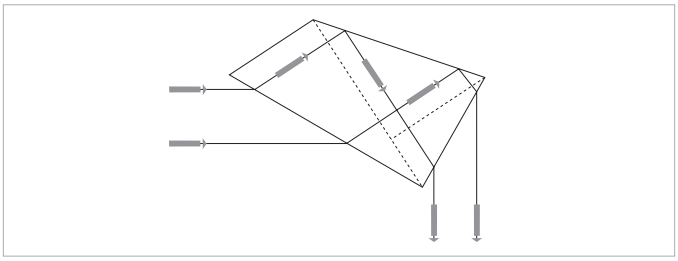

Figure 1. One of the wavelengths deviates by exactly 90° to its initial direction

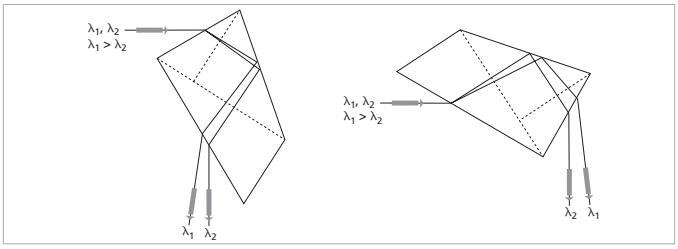

Figure 2 and Figure 3. Whether the longer wavelength is deviated more or less depends on the orientation of the prism.

Specifications

Product Code: PLBC

Optical Material: Suprasil 1, UV-grade fused silica or Crystal Quartz

Surface Figure: λ/10 p-v at 633 nm over clear aperture

Surface Quality: 10-5 scratch and dig on three polished surfaces

Dimensional Tolerance: +0/–0.25 mm

Angular Deviation: α:±30 arc min β:±2°

Chamfer: 0.35 mm at 45° (typical)

Clear Aperture: ≥85% of central dimension

Damage Threshold: 15 J/cm^2, 20 nsec, 20 Hz @ 1064

Standard Products

Optical Material	A (mm)	B (mm)	H (mm)	Clear Aperture (mm)	α	β	PART NUMBER
Pellin Broca Prisms							
Suprasil 1	11.0	20.0	6.4	5.0	79.5°	60°	PLBC-5.0-79.5-SS
Fused Silica	23.5	40.0	12.7	10.0	79.5°	60°	PLBC-10.0-79.5-UV
Crystal Quartz	23.5	40.0	12.7	10.0	77.2°	60°	PLBC-10.0-77.2-CQ

SPHERICAL LENSES

Spherical lenses are used to focus, form images, and to collimate or expand light. They are used in almost every optical system, from high power, deep-UV lasers to low-cost condensers delivering light to a detector. Our vast selection of lens shapes, materials and lens quality options will allow you to find the right balance between performance and cost for even the most demanding application.

Please see Pg. IV for the Semi Custom Selection Guide.

SELECTION GUIDE 24

PLANO-CONVEX SPHERICAL LENSES 25

BI-CONVEX SPHERICAL LENSES 41

PLANO-CONCAVE SPHERICAL LENSES 48

BI-CONCAVE SPHERICAL LENSES 56

POSITIVE BESTFORM LENSES 59

ASPHERIC GLASS CONDENSER LENSES 60

SELECTION GUIDE

Product Type	Product Features	Plano Convex	Bi Convex	Plano Concave	Bi Concave
LASER QUALITY N-BK7	λ/10 surface figure 10-5 scratch and dig High damage threshold	266	281	288	295
STANDARD QUALITY N-BK7	λ/2 irregularity 60-40 scratch and dig	263	279	286	294
LASER QUALITY UV-grade Fused Silica	λ/10 surface figure 10-5 scratch and dig High damage threshold	272	284	291	296
STANDARD QUALITY UV-grade Fused Silica	λ/4 irregularity 40-20 scratch and dig	270	283	290	

Product Type	Product Features	Plano Convex	Plano Concave	Bestform	Aspheric
LASER QUALITY Excimer-grade Fused Silica	λ/10 surface figure 10-5 scratch and dig Superior UV transmission down to 193 nm High damage threshold	276			
LASER QUALITY UV-grade CaF_2	λ/10 surface figure 20-10 scratch and dig Wide VUV to IR transmission High laser durability	277			
LASER QUALITY N-SF11	λ/10 surface figure 20-10 scratch and dig High refractive index material Reduced spherical aberration	278	293		
LASER QUALITY POSITIVE BESTFORM N-BK7 or UV-Grade Fused Silica	λ/10 surface figure 10-5 scratch and dig Minimized spherical aberration and coma Smallest spot size available in singlet lens High damage threshold			297	
ASPHERIC CONDENSER LENSES Crown Glass	80-50 scratch and dig High collection efficiency for lighting applications				298

IDEX OPTICS & PHOTONICS MARKETPLACE

CVI Laser Optics

STANDARD N-BK7 PLANO-CONVEX LENSES

The LPX product with >70 designs covers an extensive range of diameters in both metric and imperial sizes as well as focal length from 6 mm to 5 m. These standard quality plano-convex N-BK7 lenses can be used in a wide range of applications except for high power lasers.

Specifications

Product Code: LPX-C

Optical Material: N-BK7

Clear Aperture (CA): ≥ 90% of central diameter

Surface Irregularity: λ/2 p-v at 633 nm before coating

Surface Quality: 60-40 scratch and dig

Diameter: Ø+0/–0.1 mm

Center Thickness: tc ± 0.2 mm

Chamfer: 0.10-0.50 mm at 45°

Centration: ≤ 3 arc minutes

Paraxial Focal Length: *f* ±2% (±5% for the LPX-4.0-3.1-C)

Design Wavelength: 546.1 nm

Antireflection Coating: Wavelength user specified

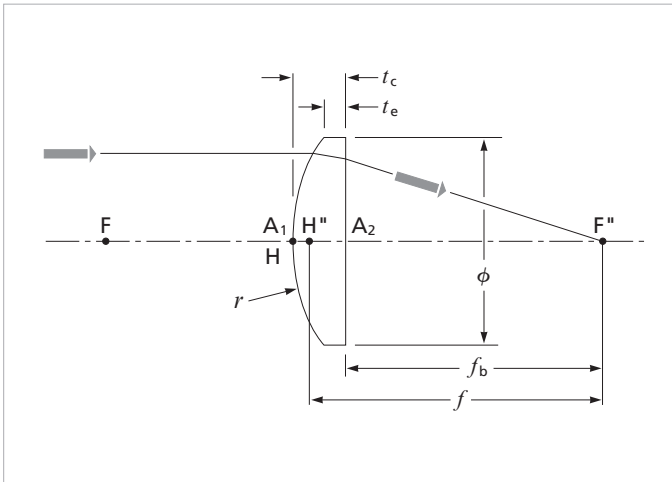

Plano-convex lens

Semi Custom

Add a coating to a Standard Uncoated Product

YOUR CUSTOM PART NUMBER	LPX-4.0-3.1-C	—	415-700

WAVELENGTH OF AR COATING (nm); for uncoated leave blank

415-700	633-1064	1064

Standard Uncoated Products

f (mm)	Ø (mm)	f/#	f_b (mm)	t_c (mm)	t_e (mm)	r (mm)	PART NUMBER
Standard N-BK7 Plano-Convex Lenses							
6.0	4.0	1.7	5.0	1.5	0.8	3.1	LPX-4.0-3.1-C
8.0	4.0	2.2	6.4	2.5	2.0	4.2	LPX-4.0-4.2-C
10.0	5.0	2.2	8.3	2.6	2.0	5.2	LPX-5.0-5.2-C
10.0	8.0	1.4	7.4	3.9	2.0	5.2	LPX-8.0-5.2-C
13.0	7.5	1.9	11.7	2.0	0.9	6.7	LPX-7.5-6.7-C
15.0	8.0	2.1	13.0	3.1	2.0	7.8	LPX-8.0-7.8-C
15.0	10.0	1.7	12.5	3.8	2.0	7.8	LPX-10.0-7.8-C
15.0	12.5	1.3	12.0	4.5	1.4	7.8	LPX-12.5-7.8-C
18.0	8.0	2.5	16.1	2.9	2.0	9.3	LPX-8.0-9.3-C
18.0	15.0	1.3	14.3	5.7	1.9	9.3	LPX-15.0-9.3-C
20.0	10.0	2.2	17.8	3.3	2.0	10.4	LPX-10.0-10.4-C
20.0	12.5	1.8	17.4	4.0	1.9	10.4	LPX-12.5-10.4-C
21.0	15.0	1.6	17.7	5.0	2.0	10.9	LPX-15.0-10.9-C
25.0	12.0	2.3	22.7	3.5	2.0	13.0	LPX-12.0-13.0-C
25.0	14.0	2.0	22.4	4.0	2.0	13.0	LPX-14.0-13.0-C
25.4	25.4	1.1	17.9	11.4	1.7	13.2	LPX-25.4-13.2-C
30.0	12.5	2.7	27.4	4.0	2.7	15.6	LPX-12.5-15.6-C
31.7	25.4	1.4	26.5	7.9	1.9	16.4	LPX-25.4-16.4-C
35.0	30.0	1.3	28.5	9.9	2.0	18.2	LPX-30.0-18.2-C
40.0	12.5	3.6	37.7	3.5	2.5	20.7	LPX-12.5-20.7-C
40.0	20.0	2.2	37.0	4.5	1.9	20.7	LPX-20.0-20.7-C
40.0	30.0	1.5	34.5	8.4	2.0	20.7	LPX-30.0-20.7-C
50.0	12.5	4.4	47.7	3.5	2.7	25.9	LPX-12.5-25.9-C
50.0	15.0	3.7	48.0	3.1	2.0	25.9	LPX-15.0-25.9-C
50.0	25.0	2.2	46.3	5.7	2.5	25.9	LPX-25.0-25.9-C
50.0	30.0	1.9	45.5	6.8	2.0	25.9	LPX-30.0-25.9-C
50.8	25.4	2.2	47.4	5.2	1.9	26.4	LPX-25.4-26.4-C
55.0	10.0	6.1	53.4	2.4	2.0	28.5	LPX-10.0-28.5-C
60.0	30.0	2.2	56.2	5.8	2.0	31.1	LPX-30.0-31.1-C
63.5	25.4	2.8	60.5	4.5	2.0	32.9	LPX-25.4-32.9-C
75.0	25.0	3.3	72.4	4.0	1.9	38.9	LPX-25.0-38.9-C
75.0	50.0	1.7	68.1	10.5	1.4	38.9	LPX-50.0-38.9-C
76.2	25.4	3.3	73.5	4.1	2.0	39.5	LPX-25.4-39.5-C
80.0	15.0	5.9	78.2	2.7	2.0	41.5	LPX-15.0-41.5-C
80.0	30.0	3.0	76.8	4.8	2.0	41.5	LPX-30.0-41.5-C
80.0	50.0	1.8	73.2	10.4	2.0	41.5	LPX-50.0-41.5-C

IDEX OPTICS & PHOTONICS MARKETPLACE

Standard Uncoated Products

f (mm)	Ø (mm)	f/#	f_b (mm)	t_c (mm)	t_e (mm)	r (mm)	PART NUMBER
Standard N-BK7 Plano-Convex Lenses							
85.0	35.0	2.7	81.3	5.6	2.0	44.1	LPX-35.0-44.1-C
100.0	12.5	8.9	98.0	3.0	2.6	51.9	LPX-12.5-51.9-C
100.0	15.0	7.4	98.4	2.5	2.0	51.9	LPX-15.0-51.9-C
100.0	25.0	4.4	97.4	4.0	2.5	51.9	LPX-25.0-51.9-C
100.0	30.0	3.7	97.2	4.2	2.0	51.9	LPX-30.0-51.9-C
100.0	50.0	2.2	94.1	9.0	2.6	51.9	LPX-50.0-51.9-C
110.0	30.0	4.1	107.4	4.0	2.0	57.1	LPX-30.0-57.1-C
125.0	12.5	11.1	123.0	3.0	2.7	64.8	LPX-12.5-64.8-C
125.0	30.0	4.6	122.6	3.7	1.9	64.8	LPX-30.0-64.8-C
127.0	25.4	5.6	124.9	3.2	2.0	65.9	LPX-25.4-65.9-C
150.0	25.0	6.7	147.4	4.0	3.0	77.8	LPX-25.0-77.8-C
150.0	30.0	5.6	147.7	3.5	2.0	77.8	LPX-30.0-77.8-C
150.0	50.0	3.3	146.0	6.0	1.9	77.8	LPX-50.0-77.8-C
175.0	12.5	15.6	173.0	3.0	2.8	90.8	LPX-12.5-90.8-C
200.0	25.0	8.9	197.4	4.0	3.2	103.7	LPX-25.0-103.7-C
200.0	30.0	7.4	198.0	3.1	2.0	103.7	LPX-30.0-103.7-C
200.0	50.0	4.4	196.1	6.0	2.9	103.7	LPX-50.0-103.7-C
250.0	12.5	22.2	248.0	3.0	2.9	129.7	LPX-12.5-129.7-C
250.0	25.0	11.1	247.4	4.0	3.4	129.7	LPX-25.0-129.7-C
250.0	30.0	9.3	248.1	2.9	2.0	129.7	LPX-30.0-129.7-C
250.0	50.0	5.6	247.1	4.4	2.0	129.7	LPX-50.0-129.7-C
300.0	25.0	13.3	298.0	3.0	2.5	155.6	LPX-25.0-155.6-C
400.0	25.0	17.8	398.4	2.4	2.0	207.5	LPX-25.0-207.5-C
500.0	25.0	22.2	498.5	2.3	2.0	259.4	LPX-25.0-259.4-C
500.0	50.0	11.1	497.9	3.2	2.0	259.4	LPX-50.0-259.4-C
600.0	25.0	26.7	598.0	3.0	2.8	311.2	LPX-25.0-311.2-C
700.0	25.0	31.1	698.6	2.2	2.0	363.1	LPX-25.0-363.1-C
700.0	50.0	15.6	698.1	2.9	2.0	363.1	LPX-50.0-363.1-C
1000.0	25.0	44.5	998.7	2.1	2.0	518.7	LPX-25.0-518.7-C
1000.0	50.0	22.2	998.3	2.6	2.0	518.7	LPX-50.0-518.7-C
1500.0	25.0	66.7	1498.0	3.0	2.9	778.1	LPX-25.0-778.1-C
1500.0	50.0	33.3	1498.0	3.0	2.6	778.1	LPX-50.0-778.1-C
2000.0	25.0	88.9	1998.0	3.0	2.9	1037.4	LPX-25.0-1037.4-C
2000.0	50.0	44.4	1998.0	3.0	2.7	1037.4	LPX-50.0-1037.4-C
3000.0	50.0	66.7	2998.0	3.0	2.8	1556.2	LPX-50.0-1556.2-C
5000.0	50.0	111.1	4998.0	3.0	2.9	2593.6	LPX-50.0-2593.6-C

CVI Laser Optics

LASER QUALITY N-BK7 PLANO-CONVEX LENSES

With close to 100 designs, the PLCX-C product spans focal length from 15 mm all the way to 10 m. These laser quality N-BK7 lenses can meet the most stringent customer requirements including high power / high energy laser applications as well as ultra low light scattering optical systems.

- Large selection of diameters and curvatures for all types of focusing requirements
- Laser quality: λ/10 surface figure, 10-5 surface quality
- Low-loss, high-energy AR coatings
- Other dimensions and focal lengths available in prototype and production quantities

Specifications

Product Code: PLCX-C

Optical Material: N-BK7

Surface Figure: λ/10 p-v at 633 nm before coating

Surface Quality: 10-5 scratch and dig

Diameter: Ø+0/–0.25 mm

Center Thickness: tc±0.25 mm

Chamfer: 0.35 mm at 45° typical

Concentricity: ≤ 0.05 mm

Paraxial Focal Length: f±0.5% typical

Antireflection Coating: Wavelength user specified
Narrowband: R ≤ 0.25% per surface
Broadband: R_{avg} ≤ 0.5% per surface

Clear Aperture (CA): ≥ 85% of central diameter

Damage Threshold:
Pulsed, Narrowband: 15 J/cm², 20 nsec, 20 Hz @ 1064 nm
Pulsed, Broadband: 10 J/cm², 20 nsec, 20 Hz @ 1064 nm
cw: 1 MW/cm² @ 1064 nm

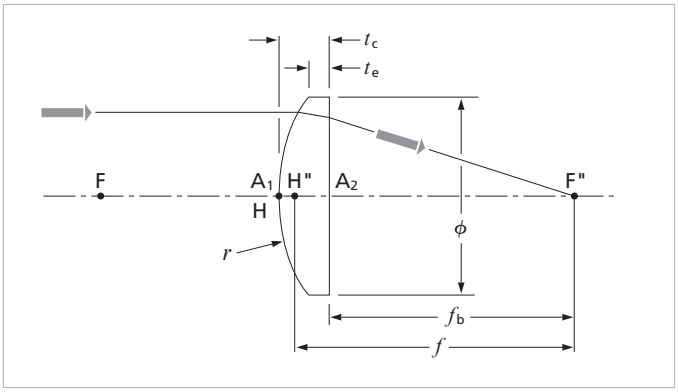

Plano-convex lens

Semi Custom

Add a coating to a Standard Uncoated Product

YOUR CUSTOM PART NUMBER	PLCX-25.4-12.9-C	—	532

WAVELENGTH OF AR COATING (nm); for uncoated leave blank

415-700	780	1050-1600	1550
532	800	1053	
633	808	1064	
633-1064	1030	1064/532	

IDEX OPTICS & PHOTONICS MARKETPLACE

Standard Coated Products

f (mm)	Ø (mm)	r (mm)	PART NUMBER
PLCX-C Laser Quality Lenses for 532 nm			
35.0	10.0	18.0	PLCX-10.0-18.0-C-532
100.0	25.4	51.5	PLCX-25.4-51.5-C-532
125.0	25.4	64.4	PLCX-25.4-64.4-C-532
200.0	25.4	103.0	PLCX-25.4-103.0-C-532
250.0	38.1	128.8	PLCX-38.1-128.8-C-532
300.0	25.4	154.5	PLCX-25.4-154.5-C-532
400.0	25.4	206.0	PLCX-25.4-206.0-C-532
500.0	25.4	257.5	PLCX-25.4-257.5-C-532
600.0	25.4	309.1	PLCX-25.4-309.1-C-532
1000.0	25.4	515.1	PLCX-25.4-515.1-C-532
1500.0	25.4	772.6	PLCX-25.4-772.6-C-532
2000.0	25.4	1030.2	PLCX-25.4-1030.2-C-532
PLCX-C Laser Quality Lenses for 1064 nm			
25.0	10.0	12.9	PLCX-10.0-12.9-C-1064
50.0	25.4	25.8	PLCX-25.4-25.8-C-1064
75.0	25.4	38.6	PLCX-25.4-38.6-C-1064
100.0	25.4	51.5	PLCX-25.4-51.5-C-1064
125.0	25.4	64.4	PLCX-25.4-64.4-C-1064
150.0	25.4	77.3	PLCX-25.4-77.3-C-1064
150.0	50.8	77.3	PLCX-50.8-77.3-C-1064
200.0	25.4	103.0	PLCX-25.4-103.0-C-1064
250.0	25.4	128.8	PLCX-25.4-128.8-C-1064
300.0	25.4	154.5	PLCX-25.4-154.5-C-1064
400.0	25.4	206.0	PLCX-25.4-206.0-C-1064
500.0	25.4	257.5	PLCX-25.4-257.5-C-1064
500.0	50.8	257.5	PLCX-50.8-257.5-C-1064
600.0	25.4	309.1	PLCX-25.4-309.1-C-1064
750.0	25.4	386.3	PLCX-25.4-386.3-C-1064
900.0	25.4	463.5	PLCX-25.4-463.5-C-1064
1000.0	25.4	515.1	PLCX-25.4-515.1-C-1064
1000.0	50.8	515.1	PLCX-50.8-515.1-C-1064
2000.0	25.4	1030.2	PLCX-25.4-1030.2-C-1064
2000.0	50.8	1030.2	PLCX-50.8-1030.2-C-1064

Standard Uncoated Products

f (mm)	Ø (mm)	f/#	f_b (mm)	t_c (mm)	t_e (mm)	r (mm)	f @ 532 nm	f @ 633 nm	f @ 1064 nm	f @ 1319 nm	PART NUMBER
Laser Quality N-BK7 Plano-Convex Lenses											
15.0	8.0	2.2	12.9	3.1	2.0	7.7	14.8	14.9	15.2	15.3	PLCX-8.0-7.7-C
20.0	12.0	2.0	17.4	3.9	2.0	10.3	19.8	20.0	20.3	20.5	PLCX-12.0-10.3-C
22.0	18.0	1.4	18.0	6.0	1.5	11.3	21.8	21.9	22.3	22.4	PLCX-18.0-11.3-C
25.0	10.0	2.9	22.4	4.0	3.0	12.9	24.8	25.0	25.5	25.6	PLCX-10.0-12.9-C
25.0	12.7	2.3	22.4	4.0	2.3	12.9	24.8	25.0	25.5	25.6	PLCX-12.7-12.9-C
25.0	25.4	1.2	16.6	12.7	2.1	12.9	24.8	25.0	25.5	25.6	PLCX-25.4-12.9-C
35.0	10.0	4.1	33.5	2.2	1.5	18.0	34.7	34.9	35.5	35.8	PLCX-10.0-18.0-C
35.0	25.4	1.6	30.2	7.2	2.0	18.0	34.7	34.9	35.5	35.8	PLCX-25.4-18.0-C
40.0	10.0	4.7	38.3	2.6	2.0	20.6	39.7	40.0	40.7	40.9	PLCX-10.0-20.6-C
40.0	25.4	1.9	36.5	5.3	0.9	20.6	39.7	40.0	40.7	40.9	PLCX-25.4-20.6-C
50.0	10.0	5.9	48.7	2.0	1.5	25.8	49.7	50.1	50.9	51.2	PLCX-10.0-25.8-C
50.0	12.7	4.6	48.7	2.0	1.2	25.8	49.7	50.1	50.9	51.2	PLCX-12.7-25.8-C
50.0	25.4	2.3	46.5	5.3	2.0	25.8	49.7	50.1	50.9	51.2	PLCX-25.4-25.8-C
60.0	8.0	8.8	58.6	2.1	1.8	30.9	59.5	60.0	61.0	61.4	PLCX-8.0-30.9-C
60.0	15.0	4.7	58.6	2.1	1.2	30.9	59.5	60.0	61.0	61.4	PLCX-15.0-30.9-C
60.0	25.4	2.8	57.2	4.2	1.5	30.9	59.5	60.0	61.0	61.4	PLCX-25.4-30.9-C
70.0	25.4	3.2	67.0	4.5	2.2	36.1	69.5	70.1	71.3	71.7	PLCX-25.4-36.1-C
75.0	8.0	11.0	73.7	2.0	1.8	38.6	74.3	74.9	76.2	76.7	PLCX-8.0-38.6-C
75.0	15.0	5.9	73.7	2.0	1.3	38.6	74.3	74.9	76.2	76.7	PLCX-15.0-38.6-C
75.0	25.4	3.5	71.6	5.2	3.0	38.6	74.3	74.9	76.2	76.7	PLCX-25.4-38.6-C
75.0	50.8	1.7	67.4	11.5	2.0	38.6	74.3	74.9	76.2	76.7	PLCX-50.8-38.6-C
100.0	10.0	11.8	98.3	2.5	2.3	51.5	99.1	100.0	101.7	102.3	PLCX-10.0-51.5-C
100.0	25.4	4.6	97.4	4.0	2.4	51.5	99.1	100.0	101.7	102.3	PLCX-25.4-51.5-C
100.0	50.8	2.3	93.4	10.0	3.3	51.5	99.1	100.0	101.7	102.3	PLCX-50.8-51.5-C
125.0	25.4	5.8	122.4	4.0	2.7	64.4	124.0	125.0	127.1	127.9	PLCX-25.4-64.4-C
125.0	38.1	3.9	121.4	5.5	2.6	64.4	124.0	125.0	127.1	127.9	PLCX-38.1-64.4-C
127.0	50.8	2.9	121.7	8.0	2.9	65.4	125.9	127.0	129.1	129.9	PLCX-50.8-65.4-C
150.0	10.0	17.6	148.7	1.9	1.7	77.3	148.8	150.1	152.6	153.5	PLCX-10.0-77.3-C
150.0	25.4	6.9	147.4	4.0	2.9	77.3	148.8	150.1	152.6	153.5	PLCX-25.4-77.3-C
150.0	38.1	4.6	146.7	5.0	2.6	77.3	148.8	150.1	152.6	153.5	PLCX-38.1-77.3-C
150.0	50.8	3.5	145.4	7.0	2.7	77.3	148.8	150.1	152.6	153.5	PLCX-50.8-77.3-C
170.0	25.0	8.0	167.3	4.1	3.2	87.6	168.6	170.1	172.9	174.0	PLCX-25.0-87.6-C
200.0	10.0	23.5	198.5	2.3	2.2	103.0	198.3	200.0	203.3	204.6	PLCX-10.0-103.0-C
200.0	25.4	9.3	197.4	4.0	3.2	103.0	198.3	200.0	203.3	204.6	PLCX-25.4-103.0-C
200.0	38.1	6.2	196.6	5.1	3.3	103.0	198.3	200.0	203.3	204.6	PLCX-38.1-103.0-C
200.0	50.8	4.6	195.8	6.4	3.2	103.0	198.3	200.0	203.3	204.6	PLCX-50.8-103.0-C

IDEX OPTICS & PHOTONICS MARKETPLACE

Standard Uncoated Products

f (mm)	Ø (mm)	f/#	f_b (mm)	t_c (mm)	t_e (mm)	r (mm)	f @ 532 nm	f @ 633 nm	f @ 1064 nm	f @ 1319 nm	PART NUMBER
Laser Quality N-BK7 Plano-Convex Lenses											
250.0	25.4	11.6	247.4	4.0	3.4	128.8	247.9	250.1	254.2	255.8	PLCX-25.4-128.8-C
250.0	38.1	7.7	247.0	4.5	3.1	128.8	247.9	250.1	254.2	255.8	PLCX-38.1-128.8-C
250.0	50.8	5.8	245.8	6.4	3.9	128.8	247.9	250.1	254.2	255.8	PLCX-50.8-128.8-C
300.0	25.4	13.9	297.4	4.0	3.5	154.5	297.4	299.9	305.0	306.9	PLCX-25.4-154.5-C
300.0	50.0	7.1	296.0	6.0	4.0	154.5	297.4	300.0	305.0	306.9	PLCX-50.0-154.5-C
350.0	25.4	16.2	347.4	4.0	3.6	180.3	347.1	350.0	355.9	358.1	PLCX-25.4-180.3-C
350.0	38.1	10.8	346.7	5.0	4.0	180.3	347.1	350.0	355.9	358.1	PLCX-38.1-180.3-C
350.0	50.8	8.1	345.8	6.4	4.6	180.3	347.1	350.0	355.9	358.1	PLCX-50.8-180.3-C
400.0	25.4	18.5	397.3	4.1	3.7	206.0	396.6	399.9	406.6	409.2	PLCX-25.4-206.0-C
400.0	38.1	12.4	396.7	5.0	4.1	206.7	397.9	401.3	408.0	410.6	PLCX-38.1-206.7-C
500.0	25.4	23.2	497.4	4.0	3.7	257.5	495.7	499.9	508.3	511.5	PLCX-25.4-257.5-C
500.0	38.1	15.4	496.7	5.0	4.3	257.5	495.7	499.9	508.3	511.5	PLCX-38.1-257.5-C
500.0	50.8	11.6	495.8	6.4	5.1	257.5	495.7	499.9	508.3	511.5	PLCX-50.8-257.5-C
600.0	25.4	27.8	597.4	4.0	3.7	309.1	595.0	600.1	610.1	614.0	PLCX-25.4-309.1-C
600.0	50.8	13.9	595.8	6.4	5.4	309.1	595.0	600.1	610.1	614.0	PLCX-50.8-309.1-C
700.0	25.4	32.4	697.4	4.0	3.8	360.6	694.2	700.1	711.8	716.2	PLCX-25.4-360.6-C
750.0	25.4	34.7	747.4	4.0	3.8	386.3	743.6	750.0	762.5	767.3	PLCX-25.4-386.3-C
750.0	50.8	17.4	745.8	6.4	5.6	386.3	743.6	750.0	762.5	767.3	PLCX-50.8-386.3-C
800.0	25.4	37.1	797.4	4.0	3.8	412.1	793.3	800.1	813.4	818.5	PLCX-25.4-412.1-C
800.0	50.8	18.5	795.8	6.4	5.6	412.1	793.3	800.1	813.4	818.5	PLCX-50.8-412.1-C
900.0	25.4	41.7	897.2	4.2	4.0	463.5	892.3	899.8	914.9	920.6	PLCX-25.4-463.5-C
900.0	50.8	20.8	895.8	6.4	5.7	463.5	892.3	899.8	914.9	920.6	PLCX-50.8-463.5-C
1000.0	25.4	46.3	997.4	4.0	3.8	515.1	991.6	1000.0	1016.7	1023.1	PLCX-25.4-515.1-C
1000.0	50.8	23.2	995.8	6.4	5.8	515.1	991.6	1000.0	1016.7	1023.1	PLCX-50.8-515.1-C
1500.0	25.4	69.5	1497.4	4.0	3.9	772.6	1487.3	1499.9	1525.0	1534.6	PLCX-25.4-772.6-C
1500.0	50.8	34.7	1495.8	6.3	5.9	772.6	1487.3	1499.9	1525.0	1534.6	PLCX-50.8-772.6-C
2000.0	25.4	92.6	1997.4	4.0	3.9	1030.2	1983.2	2000.0	2033.4	2045.8	PLCX-25.4-1030.2-C
2000.0	50.8	46.3	1995.8	6.4	6.1	1030.2	1983.2	2000.0	2033.4	2045.8	PLCX-50.8-1030.2-C
3000.0	25.4	139.0	2997.4	4.0	3.9	1545.0	2974.2	2999.5	3049.5	3068.8	PLCX-25.4-1545.0-C
4000.0	25.4	185.3	3997.4	4.0	4.0	2060.0	3965.6	3999.3	4066.0	4091.7	PLCX-25.4-2060.0-C
5000.0	25.4	231.6	4997.4	4.0	4.0	2575.0	4957.0	4999.1	5082.6	5114.6	PLCX-25.4-2575.0-C
7500.0	25.4	347.4	7497.4	4.0	3.9	3863.0	7436.4	7499.7	7624.8	7672.9	PLCX-25.4-3863.0-C
10000.0	25.4	463.2	9997.4	4.0	4.0	5151.0	9915.8	10000.2	10167.1	10231.2	PLCX-25.4-5151.0-C

CVI Laser Optics

STANDARD FUSED SILICA PLANO-CONVEX LENSES

The LUP product with ~20 designs covers a wide range of focal lengths from 15 mm to 1 m. These standard quality plano-convex fused silica lenses are an economical alternative to laser grade lenses which are recommended for more demanding applications.

Specifications

Product Code: LUP-UV

Optical Material: UV-grade fused silica

Clear Aperture (CA): ≥ 90% of central diameter

Surface Irregularity: λ/4 p-v at 633 nm before coating

Surface Quality: 40-20 scratch and dig

Diameter: Ø+0/–0.10 mm

Center Thickness: t_c ±0.2 mm

Chamfer: 0.05 – 0.20 mm at 45°

Centration: ≤ 3 arc minutes

Paraxial Focal Length: f ±1%

Design Wavelength: 404.7 nm

Antireflection Coating: Wavelength user specified

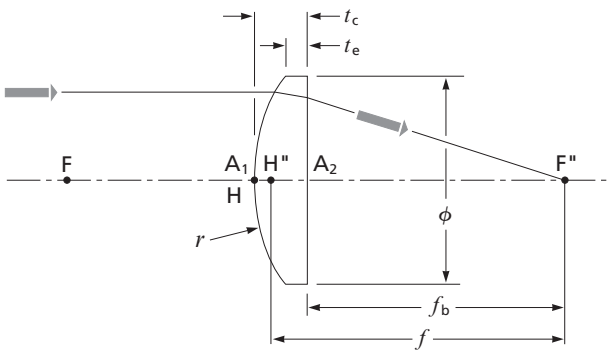

Plano-convex lens

Semi Custom

Add a coating to a Standard Uncoated Product

YOUR CUSTOM PART NUMBER	LUP-12.5-11.7-UV	—	1064

WAVELENGTH OF AR COATING (nm); for uncoated leave blank

248-355	355-532	1064

IDEX OPTICS & PHOTONICS MARKETPLACE

Standard Uncoated Products

f (mm)	Ø (mm)	f/#	f_b (mm)	t_c (mm)	t_e (mm)	r (mm)	PART NUMBER
Standard Fused Silica Plano-Convex Lenses							
15.0	12.5	1.3	10.9	6.0	2.2	7.0	LUP-12.5-7.0-UV
20.0	12.5	1.8	16.6	5.0	2.6	9.4	LUP-12.5-9.4-UV
25.0	12.5	2.2	21.9	4.5	2.7	11.7	LUP-12.5-11.7-UV
30.0	12.5	2.7	27.3	4.0	2.5	14.1	LUP-12.5-14.1-UV
37.5	25.0	1.7	31.4	9.0	3.8	17.6	LUP-25.0-17.6-UV
40.0	12.5	3.6	37.6	3.5	2.4	18.8	LUP-12.5-18.8-UV
50.0	25.0	2.2	45.2	7.0	3.4	23.5	LUP-25.0-23.5-UV
75.0	12.5	6.7	72.6	3.5	2.9	35.2	LUP-12.5-35.2-UV
75.0	25.0	3.3	70.9	6.0	3.7	35.2	LUP-25.0-35.2-UV
75.0	50.0	1.7	66.2	13.0	2.6	35.2	LUP-50.0-35.2-UV
100.0	12.5	8.9	97.6	3.5	3.1	47.0	LUP-12.5-47.0-UV
100.0	25.0	4.4	96.6	5.0	3.3	47.0	LUP-25.0-47.0-UV
100.0	50.0	2.2	92.5	11.0	3.8	47.0	LUP-50.0-47.0-UV
125.0	12.5	11.1	122.6	3.5	3.2	58.7	LUP-12.5-58.7-UV
125.0	25.0	5.6	121.6	5.0	3.7	58.7	LUP-25.0-58.7-UV
150.0	25.0	6.7	146.9	4.5	3.4	70.4	LUP-25.0-70.4-UV
200.0	25.0	8.9	196.9	4.5	3.7	93.9	LUP-25.0-93.9-UV
250.0	25.0	11.1	247.3	4.0	3.3	117.4	LUP-25.0-117.4-UV
300.0	25.0	13.3	297.3	4.0	3.4	140.9	LUP-25.0-140.9-UV
500.0	25.0	22.2	497.3	4.0	3.7	234.8	LUP-25.0-234.8-UV
1000.0	25.0	44.4	997.3	4.0	3.8	469.6	LUP-25.0-469.6-UV

CVI Laser Optics

LASER QUALITY FUSED SILICA PLANO-CONVEX LENSES

With close to 100 designs, the PLCX-UV product spans focal length from 3 mm all the way to 10 m. These laser quality fused silica lenses can meet the most stringent customer requirements including high power / high energy laser applications as well as ultra low light scattering optical systems.

- Diffraction limited focusing performance for most laser applications
- Low-loss, high-energy AR coatings
- Other dimensions and focal length available in prototype and production quantities

Specifications

Product Code: PLCX-UV

Optical Material: UV-grade fused silica

Surface Figure: λ/10 p-v at 633 nm before coating

Surface Quality: 10-5 scratch and dig

Diameter: Ø+0/–0.25 mm

Center Thickness: t_c±0.25 mm

Chamfer: 0.35 mm at 45° typical

Concentricity: ≤ 0.05 mm

Paraxial Focal Length: *f* ±0.5% typical

Antireflection Coating: Wavelength user specified
Narrowband: R ≤ 0.25% per surface
Broadband: R_{avg} ≤ 0.5% per surface

Clear Aperture (CA): ≥ 85% of central diameter

Damage Threshold:
Pulsed, Narrowband: 15 J/cm², 20 nsec, 20 Hz @ 1064 nm
Pulsed, Broadband: 10 J/cm², 20 nsec, 20 Hz @ 1064 nm
cw: 1 MW/cm² @ 1064 nm

Standard Coated Products

f (mm)	Ø (mm)	r (mm)	PART NUMBER
PLCX-UV Laser Quality Lenses for 266 nm			
50.0	25.4	25.8	PLCX-25.4-25.8-UV-266
100.0	25.4	51.5	PLCX-25.4-51.5-UV-266
150.0	25.4	77.3	PLCX-25.4-77.3-UV-266
200.0	25.4	103.0	PLCX-25.4-103.0-UV-266
500.0	25.4	257.5	PLCX-25.4-257.5-UV-266
PLCX-UV Laser Quality Lenses for 355 nm			
40.0	12.7	20.6	PLCX-12.7-20.6-UV-355
50.0	25.4	25.8	PLCX-25.4-25.8-UV-355
65.0	12.7	33.7	PLCX-12.7-33.7-UV-355
100.0	25.4	51.5	PLCX-25.4-51.5-UV-355
125.0	25.4	64.4	PLCX-25.4-64.4-UV-355
150.0	25.4	77.3	PLCX-25.4-77.3-UV-355
200.0	25.4	103.0	PLCX-25.4-103.0-UV-355
300.0	25.4	154.5	PLCX-25.4-154.5-UV-355
400.0	25.4	206.0	PLCX-25.4-206.0-UV-355
500.0	25.4	257.5	PLCX-25.4-257.5-UV-355
600.0	25.4	309.1	PLCX-25.4-309.1-UV-355
1500.0	25.4	772.6	PLCX-25.4-772.6-UV-355
2000.0	25.4	1030.2	PLCX-25.4-1030.2-UV-355
PLCX-UV Laser Quality Lenses for 532 nm			
60.0	8.0	30.9	PLCX-8.0-30.9-UV-532
75.0	25.4	38.6	PLCX-25.4-38.6-UV-532
100.0	25.4	51.5	PLCX-25.4-51.5-UV-532
150.0	25.4	77.3	PLCX-25.4-77.3-UV-532
200.0	25.4	103.0	PLCX-25.4-103.0-UV-532
300.0	25.4	154.5	PLCX-25.4-154.5-UV-532
PLCX-UV Laser Quality Lenses for 1064 nm			
50.0	15.0	25.8	PLCX-15.0-25.8-UV-1064
50.0	25.4	25.8	PLCX-25.4-25.8-UV-1064
60.0	25.4	30.9	PLCX-25.4-30.9-UV-1064
65.0	25.4	33.7	PLCX-25.4-33.7-UV-1064
75.0	25.4	38.6	PLCX-25.4-38.6-UV-1064
100.0	25.4	51.5	PLCX-25.4-51.5-UV-1064
125.0	25.4	64.4	PLCX-25.4-64.4-UV-1064
150.0	25.4	77.3	PLCX-25.4-77.3-UV-1064

IDEX OPTICS & PHOTONICS MARKETPLACE

Standard Coated Products

f (mm)	Ø (mm)	r (mm)	PART NUMBER
PLCX-UV Laser Quality Lenses for 1064 nm			
150.0	50.8	77.3	PLCX-50.8-77.3-UV-1064
200.0	25.4	103.0	PLCX-25.4-103.0-UV-1064
200.0	50.8	103.0	PLCX-50.8-103.0-UV-1064
250.0	25.4	128.8	PLCX-25.4-128.8-UV-1064
254.0	50.8	130.8	PLCX-50.8-130.8-UV-1064
300.0	25.4	154.5	PLCX-25.4-154.5-UV-1064
300.0	50.8	154.5	PLCX-50.8-154.5-UV-1064
350.0	25.4	180.3	PLCX-25.4-180.3-UV-1064
350.0	50.8	180.3	PLCX-50.8-180.3-UV-1064
400.0	25.4	206.0	PLCX-25.4-206.0-UV-1064
500.0	25.4	257.5	PLCX-25.4-257.5-UV-1064
500.0	50.8	257.5	PLCX-50.8-257.5-UV-1064
600.0	25.4	309.1	PLCX-25.4-309.1-UV-1064
600.0	50.8	309.1	PLCX-50.8-309.1-UV-1064
700.0	25.4	360.6	PLCX-25.4-360.6-UV-1064
1000.0	25.4	515.1	PLCX-25.4-515.1-UV-1064
1000.0	50.8	515.1	PLCX-50.8-515.1-UV-1064

Standard Uncoated Products

f (mm)	Ø (mm)	f/#	f_b (mm)	t_c (mm)	t_e (mm)	r (mm)	f@ 266 nm	f@ 355 nm	f@ 532 nm	f@ 1064 nm	PART NUMBER
Laser Quality Fused Silica Plano-Convex Lenses											
3.0	2.5	1.4	1.7	2.0	1.3	1.5	3.0	3.2	3.3	3.3	PLCX-2.5-1.5-UV
10.0	8.0	1.5	7.5	3.9	2.0	5.2	10.4	10.9	11.3	11.6	PLCX-8.0-5.2-UV
15.0	10.0	1.8	12.5	3.8	2.0	7.7	15.4	16.2	16.7	17.1	PLCX-10.0-7.7-UV
20.0	10.0	2.4	17.5	3.9	2.6	10.3	20.6	21.6	22.4	22.9	PLCX-10.0-10.3-UV
25.0	8.0	3.7	22.4	4.0	3.4	12.9	25.8	27.1	28.0	28.7	PLCX-8.0-12.9-UV
25.0	10.0	2.9	22.4	4.0	3.0	12.9	25.8	27.1	28.0	28.7	PLCX-10.0-12.9-UV
25.0	12.7	2.3	22.4	4.0	2.3	12.9	25.8	27.1	28.0	28.7	PLCX-12.7-12.9-UV
25.0	25.4	1.2	16.8	12.7	2.1	12.9	25.8	27.1	28.0	28.7	PLCX-25.4-12.9-UV
31.0	10.0	3.6	29.8	1.9	1.1	16.0	32.0	33.6	34.7	35.6	PLCX-10.0-16.0-UV
35.0	8.0	5.1	34.0	1.5	1.0	18.0	36.0	37.8	39.1	40.0	PLCX-8.0-18.0-UV
35.0	25.4	1.6	30.4	7.2	2.0	18.0	36.0	37.8	39.1	40.0	PLCX-25.4-18.0-UV
38.0	15.0	3.0	33.3	7.2	5.7	19.6	39.2	41.2	42.5	43.6	PLCX-15.0-19.6-UV
40.0	12.7	3.7	36.6	5.3	4.3	20.6	41.2	43.3	44.7	45.8	PLCX-12.7-20.6-UV
40.0	25.4	1.9	36.6	5.3	0.9	20.6	41.2	43.3	44.7	45.8	PLCX-25.4-20.6-UV

Standard Uncoated Products

f (mm)	Ø (mm)	f/#	f_b (mm)	t_c (mm)	t_e (mm)	r (mm)	f @ 266 nm	f @ 355 nm	f @ 532 nm	f @ 1064 nm	PART NUMBER
Laser Quality Fused Silica Plano-Convex Lenses											
50.0	8.0	7.4	48.7	2.0	1.7	25.8	51.6	54.2	56.0	57.4	PLCX-8.0-25.8-UV
50.0	12.7	4.6	48.7	2.0	1.2	25.8	51.6	54.2	56.0	57.4	PLCX-12.7-25.8-UV
50.0	15.0	3.9	46.6	5.3	4.2	25.8	51.6	54.2	56.0	57.4	PLCX-15.0-25.8-UV
50.0	25.4	2.3	46.6	5.3	2.0	25.8	51.6	54.2	56.0	57.4	PLCX-25.4-25.8-UV
60.0	8.0	8.8	58.6	2.1	1.8	30.9	61.8	64.9	67.1	68.7	PLCX-8.0-30.9-UV
60.0	15.0	4.7	57.3	4.2	3.3	30.9	61.8	64.9	67.1	68.7	PLCX-15.0-30.9-UV
60.0	25.4	2.8	57.3	4.2	1.5	30.9	61.8	64.9	67.1	68.7	PLCX-25.4-30.9-UV
60.0	38.1	1.9	54.7	8.0	1.4	30.9	61.8	64.9	67.1	68.7	PLCX-38.1-30.9-UV
65.0	12.7	6.0	63.1	3.0	2.4	33.7	67.4	70.8	73.1	75.0	PLCX-12.7-33.7-UV
65.0	25.4	3.0	61.8	5.0	2.5	33.7	67.4	70.8	73.1	75.0	PLCX-25.4-33.7-UV
75.0	12.7	6.9	73.7	2.0	1.5	38.6	77.2	81.1	83.8	85.8	PLCX-12.7-38.6-UV
75.0	15.0	5.9	73.7	2.0	1.3	38.6	77.2	81.1	83.8	85.8	PLCX-15.0-38.6-UV
75.0	25.4	3.5	72.7	3.6	1.5	38.6	77.2	81.1	83.8	85.8	PLCX-25.4-38.6-UV
75.0	38.1	2.3	70.5	7.0	2.0	38.6	77.2	81.1	83.8	85.8	PLCX-38.1-38.6-UV
75.0	50.8	1.7	67.6	11.5	2.0	38.6	77.2	81.1	83.8	85.8	PLCX-50.8-38.6-UV
80.0	12.7	7.4	78.3	2.7	2.2	41.2	82.5	86.5	89.4	91.6	PLCX-12.7-41.2-UV
91.0	25.4	4.2	87.8	5.0	3.2	46.4	92.9	97.5	100.7	103.2	PLCX-25.4-46.4-UV
100.0	8.0	14.7	98.4	2.5	2.3	51.5	103.1	108.2	111.8	114.5	PLCX-8.0-51.5-UV
100.0	15.0	7.8	98.4	2.5	2.0	51.5	103.1	108.2	111.8	114.5	PLCX-15.0-51.5-UV
100.0	25.4	4.6	97.4	4.0	2.4	51.5	103.1	108.2	111.8	114.5	PLCX-25.4-51.5-UV
100.0	38.1	3.1	96.1	6.0	2.3	51.5	103.1	108.2	111.8	114.5	PLCX-38.1-51.5-UV
100.0	50.8	2.3	93.6	10.0	3.3	51.5	103.1	108.2	111.8	114.5	PLCX-50.8-51.5-UV
120.0	12.7	11.1	118.3	2.6	2.3	61.8	123.7	129.8	134.1	137.4	PLCX-12.7-61.8-UV
125.0	15.0	9.8	123.3	2.6	2.2	64.4	128.9	135.3	139.8	143.2	PLCX-15.0-64.4-UV
125.0	25.4	5.8	122.4	4.0	2.7	64.4	128.9	135.3	139.8	143.2	PLCX-25.4-64.4-UV
125.0	38.1	3.9	121.5	5.5	2.6	64.4	128.9	135.3	139.8	143.2	PLCX-38.1-64.4-UV
125.0	50.8	2.9	120.3	7.3	2.1	64.4	128.9	135.3	139.8	143.2	PLCX-50.8-64.4-UV
140.0	25.0	6.6	137.4	4.0	2.9	72.1	144.3	151.4	156.5	160.4	PLCX-25.0-72.1-UV
140.0	50.8	3.2	135.7	6.6	2.0	72.1	144.3	151.4	156.5	160.4	PLCX-50.8-72.1-UV
150.0	12.7	13.9	148.5	2.3	2.0	77.3	154.7	162.4	167.8	171.9	PLCX-12.7-77.3-UV
150.0	15.0	11.8	148.4	2.5	2.1	77.3	154.7	162.4	167.8	171.9	PLCX-15.0-77.3-UV
150.0	25.4	6.9	147.4	4.0	2.9	77.3	154.7	162.4	167.8	171.9	PLCX-25.4-77.3-UV
150.0	50.8	3.5	145.5	7.0	2.7	77.3	154.7	162.4	167.8	171.9	PLCX-50.8-77.3-UV
177.0	50.8	4.1	172.7	6.6	3.0	91.2	182.5	191.6	198.0	202.8	PLCX-50.8-91.2-UV
196.0	15.0	15.4	194.5	2.3	2.0	101.0	202.1	212.2	219.2	224.6	PLCX-15.0-101.0-UV
200.0	10.0	23.5	198.5	2.3	2.2	103.0	206.1	216.4	223.6	229.1	PLCX-10.0-103.0-UV
200.0	25.4	9.3	197.4	4.0	3.2	103.0	206.1	216.4	223.6	229.1	PLCX-25.4-103.0-UV
200.0	38.1	6.2	196.7	5.1	3.3	103.0	206.1	216.4	223.6	229.1	PLCX-38.1-103.0-UV
200.0	50.8	4.6	195.9	6.4	3.2	103.0	206.1	216.4	223.6	229.1	PLCX-50.8-103.0-UV
250.0	25.4	11.6	247.4	4.0	3.4	128.8	257.8	270.5	279.6	286.5	PLCX-25.4-128.8-UV
250.0	38.1	7.7	246.5	5.5	4.1	128.8	257.8	270.5	279.6	286.5	PLCX-38.1-128.8-UV
254.0	50.8	5.9	249.9	6.4	3.9	130.8	261.8	274.7	283.9	290.9	PLCX-50.8-130.8-UV

IDEX OPTICS & PHOTONICS MARKETPLACE

Standard Uncoated Products

f (mm)	Ø (mm)	f/#	f_b (mm)	t_c (mm)	t_e (mm)	r (mm)	f @ 266 nm	f @ 355 nm	f @ 532 nm	f @ 1064 nm	PART NUMBER
Laser Quality Fused Silica Plano-Convex Lenses											
300.0	25.4	13.9	297.4	4.0	3.5	154.5	309.2	324.5	335.4	343.6	PLCX-25.4-154.5-UV
300.0	38.1	9.3	296.1	6.0	4.8	154.5	309.2	324.5	335.4	343.6	PLCX-38.1-154.5-UV
300.0	50.8	6.9	295.9	6.4	4.3	154.5	309.2	324.5	335.4	343.6	PLCX-50.8-154.5-UV
350.0	25.4	16.2	347.4	4.0	3.6	180.3	360.8	378.7	391.3	401.0	PLCX-25.4-180.3-UV
350.0	50.8	8.1	345.9	6.4	4.6	180.3	360.8	378.7	391.3	401.0	PLCX-50.8-180.3-UV
400.0	25.4	18.5	397.4	4.0	3.6	206.0	412.3	432.7	447.1	458.2	PLCX-25.4-206.0-UV
400.0	50.8	9.3	395.8	6.4	4.8	206.0	412.3	432.7	447.1	458.2	PLCX-50.8-206.0-UV
500.0	25.4	23.2	497.4	4.0	3.7	257.5	515.3	540.9	558.9	572.7	PLCX-25.4-257.5-UV
500.0	38.1	15.4	496.8	5.0	4.3	257.5	515.3	540.9	558.9	572.7	PLCX-38.1-257.5-UV
500.0	50.8	11.6	495.9	6.4	5.1	257.5	515.3	540.9	558.9	572.7	PLCX-50.8-257.5-UV
600.0	25.4	27.8	597.4	4.0	3.7	309.1	618.6	649.3	670.9	687.5	PLCX-25.4-309.1-UV
600.0	50.8	13.9	595.9	6.4	5.4	309.1	618.6	649.3	670.9	687.5	PLCX-50.8-309.1-UV
700.0	25.4	32.4	697.4	4.0	3.8	360.6	721.7	757.4	782.7	802.0	PLCX-25.4-360.6-UV
700.0	50.8	16.2	695.9	6.4	5.5	360.6	721.7	757.4	782.7	802.0	PLCX-50.8-360.6-UV
1000.0	25.4	46.3	997.4	4.0	3.8	515.1	1030.9	1082.0	1118.1	1145.6	PLCX-25.4-515.1-UV
1000.0	50.8	23.2	995.9	6.4	5.8	515.1	1030.9	1082.0	1118.1	1145.6	PLCX-50.8-515.1-UV
1500.0	25.4	69.5	1497.4	4.0	3.9	772.6	1546.2	1622.9	1677.0	1718.3	PLCX-25.4-772.6-UV
1500.0	50.8	34.7	1495.9	6.3	5.9	772.6	1546.2	1622.9	1677.0	1718.3	PLCX-50.8-772.6-UV
2000.0	25.4	92.6	1997.4	4.0	3.9	1030.2	2061.7	2164.0	2236.1	2291.2	PLCX-25.4-1030.2-UV
2000.0	50.8	46.3	1995.9	6.4	6.1	1030.2	2061.7	2164.0	2236.1	2291.2	PLCX-50.8-1030.2-UV
3000.0	25.4	139.0	2997.4	4.0	3.9	1545.0	3092.0	3245.3	3353.5	3436.2	PLCX-25.4-1545.0-UV
3000.0	50.8	69.5	2995.9	6.4	6.2	1545.0	3092.0	3245.3	3353.5	3436.2	PLCX-50.8-1545.0-UV
4000.0	25.4	185.3	3997.4	4.0	3.9	2060.0	4122.6	4327.1	4471.4	4581.5	PLCX-25.4-2060.0-UV
4000.0	50.8	92.6	3995.9	6.4	6.2	2060.0	4122.6	4327.1	4471.4	4581.5	PLCX-50.8-2060.0-UV
5000.0	25.4	231.6	4997.4	4.0	3.9	2575.0	5153.3	5408.8	5589.2	5726.9	PLCX-25.4-2575.0-UV
5000.0	50.8	115.8	4995.9	6.4	6.3	2575.0	5153.3	5408.8	5589.2	5726.9	PLCX-50.8-2575.0-UV
7500.0	25.4	347.4	7497.4	4.0	3.9	3863.0	7730.9	8114.3	8384.9	8591.5	PLCX-25.4-3863.0-UV
7500.0	50.8	173.7	7495.9	6.4	6.3	3863.0	7730.9	8114.3	8384.9	8591.5	PLCX-50.8-3863.0-UV
10000.0	25.4	463.2	9997.4	4.0	3.9	5151.0	10308.6	10819.8	11180.6	11456.1	PLCX-25.4-5151.0-UV
10000.0	50.8	231.6	9995.9	6.4	6.3	5151.0	10308.6	10819.8	11180.6	11456.1	PLCX-50.8-5151.0-UV

Semi Custom Use the selection menu below to add a coating to a Standard Uncoated Product

YOUR CUSTOM PART NUMBER **PLCX-25.4-51.5-UV — 248**

WAVELENGTH OF AR COATING (nm); for uncoated leave blank

193	**266**	**400**	**532**	**700-900**	**808**	**1053**	**1550**
248	**355**	**405**	**633**	**780**	**1030**	**1064**	
248-355	**355-532**	**415-700**	**633-1064**	**800**	**1050-1600**	**1064/532**	

CVI Laser Optics

EXCIMER FUSED SILICA PLANO-CONVEX LENSES

Excimer fused silica plano-convex lenses are optimized for use with high energy KrF lasers at 248 nm. They offer short UV beam focusing with minimal laser-induced fluorescence.

- 193 nm internal transmission: 99.5%/cm
- 248 nm internal transmission: 99.8%/cm
- Laser quality: λ/10 surface figure,10-5 surface quality
- Low-loss, high-energy AR coatings
- Other dimensions and focal lengths as well as ArF-grade fused silica available in prototype and production quantities

Specifications

Prodcut Code: PLCX-EUV

Optical Material: KrF excimer-grade fused silica

Surface Figure: λ/10 p-v at 633 nm before coating

Surface Quality: 10-5 scratch and dig

Diameter: Ø +0/–0.25 mm

Center Thickness: t_c±0.25 mm

Chamfer: 0.35 mm at 45° typical

Concentricity: ≤ 0.05 mm

Paraxial Focal Length: *f* ±0.5% typical

Antireflection Coating: Wavelength user specified

Clear Aperture (CA): ≥ 85% of central diameter

Damage Threshold: 3 J/cm², 8 nsec pulse @ 248 nm

Semi Custom

Add a coating to a Standard Uncoated Product

YOUR CUSTOM PART NUMBER	PLCX-15.0-25.8-EUV	—	248

WAVELENGTH OF AR COATING (nm); for uncoated leave blank

193	248-355	355
248	266	355-532

Standard Uncoated Products

f (mm)	Ø (mm)	f/#	f_b (mm)	t_c (mm)	t_e (mm)	r (mm)	*f* @ 193 nm	*f* @ 248 nm	*f* @ 364 nm	PART NUMBER
Excimer Fused Silica Plano-Convex Lenses										
50.0	15.0	3.9	45.8	6.3	5.2	25.8	46.0	50.8	54.3	PLCX-15.0-25.8-EUV
75.0	25.4	3.5	72.5	3.7	1.6	38.6	68.8	75.9	81.3	PLCX-25.4-38.6-EUV
100.0	25.4	4.6	97.3	4.0	2.4	51.5	91.8	101.3	108.5	PLCX-25.4-51.5-EUV
125.0	25.4	5.8	122.3	4.0	2.7	64.4	114.8	126.7	135.7	PLCX-25.4-64.4-EUV
150.0	25.4	6.9	147.3	4.0	2.9	77.3	137.8	152.1	162.8	PLCX-25.4-77.3-EUV
200.0	25.4	9.3	197.3	4.0	3.2	103.0	183.7	202.6	217.0	PLCX-25.4-103.0-EUV
250.0	25.4	11.6	247.3	4.0	3.4	128.8	229.7	253.4	271.3	PLCX-25.4-128.8-EUV
300.0	25.4	13.9	297.3	4.0	3.5	154.5	275.5	304.0	325.5	PLCX-25.4-154.5-EUV
350.0	25.4	16.2	347.3	4.0	3.6	180.3	321.5	354.7	379.8	PLCX-25.4-180.3-EUV
400.0	25.4	18.5	397.3	4.0	3.6	206.0	367.4	405.3	433.9	PLCX-25.4-206.0-EUV
500.0	25.4	23.2	497.3	4.0	3.7	257.5	459.2	506.6	542.4	PLCX-25.4-257.5-EUV

IDEX OPTICS & PHOTONICS MARKETPLACE

CVI Laser Optics

UV-GRADE CaF_2 PLANO-CONVEX LENSES

UV-grade calcium fluoride offers a very wide transmission ranging from 150 nm to 8 µm, with excellent ultraviolet transmittance. The high laser durability of CaF_2 makes it the material of choice for use in excimer laser optics.

- Short UV beam focusing with minimum fluorescence
- Suitable for both UV and NIR applications
- Low loss, high energy AR coatings
- Other dimensions and focal lengths available in prototype and production quantities

Specifications

Prodcut Code: PLCX- CFUV

Optical Material: UV-grade CaF_2

Surface Figure: λ/10 p-v at 633 nm before coating

Surface Quality: 20-10 scratch and dig

Diameter: Ø+0/–0.25 mm

Center Thickness: t_c±0.25 mm

Chamfer: 0.35 mm at 45° typical

Concentricity: ≤ 0.05 mm

Paraxial Focal Length: *f*±0.5% typical

Antireflection Coating: Wavelength user specified

Clear Aperture (CA): ≥ 85% of central diameter

Damage Threshold: 1 J/cm², 8 nsec pulse @ 248 nm

Semi Custom

Add a coating to a Standard Uncoated Product

YOUR CUSTOM PART NUMBER **PLCX-25.4-118.0-CFUV — 193**

WAVELENGTH OF AR COATING (nm); for uncoated leave blank

193	**266**	**415-700**
248	**355**	**633-1064**
248-355	**355-532**	**1050-1600**

Standard Uncoated Products

f (mm)	Ø (mm)	f/#	f_b (mm)	t_c (mm)	t_e (mm)	r (mm)	*f*@ 193 nm	*f*@ 212 nm	*f*@ 248 nm	*f*@ 308 nm	PART NUMBER
UV-grade CaF_2 Plano-Convex Lenses											
25.0	12.7	2.3	22.4	3.8	2.0	11.9	23.6	24.4	25.3	26.2	PLCX-12.7-11.9-CFUV
50.0	25.4	2.3	45.4	6.7	3.0	23.6	47.0	48.5	50.4	52.1	PLCX-25.4-23.6-CFUV
75.0	25.4	3.5	71.3	5.4	3.0	35.0	69.8	72.1	74.8	77.3	PLCX-25.4-35.0-CFUV
100.0	25.4	4.6	96.7	4.8	3.0	46.4	92.5	95.6	99.1	102.5	PLCX-25.4-46.4-CFUV
150.0	25.4	6.9	147.1	4.2	3.0	70.6	140.8	145.4	150.9	156.0	PLCX-25.4-70.6-CFUV
200.0	25.4	9.3	197.3	3.9	3.0	93.2	185.9	192.0	199.2	206.0	PLCX-25.4-93.2-CFUV
250.0	25.4	11.6	247.5	3.7	3.0	118.0	235.2	243.0	252.1	260.7	PLCX-25.4-118.0-CFUV
500.0	25.4	23.2	497.8	3.3	3.0	231.8	462.2	477.4	495.3	512.2	PLCX-25.4-231.8-CFUV

CVI Laser Optics

N-SF11 PLANO-CONVEX LENSES

N-SF11 glass is a high refractive index material used to provide more optical power with less curvature. Singlet lenses made from N-SF11 exhibit reduced spherical aberration and achieve diffraction limited performances at lower focal ratios than N-BK7 and fused silica plano-convex lenses.

- High refractive index material
- λ/10 surface figure, 20-10 surface quality
- Low loss, high energy AR coatings
- Other dimensions and focal lengths available in prototype and production quantities

Specifications

Product Code: PLCX-SF11

Optical Material: N-SF11 glass

Surface Figure: λ/10 p-v at 633 nm before coating

Surface Quality: 20-10 scratch and dig

Diameter: Ø+0/–0.25 mm

Center Thickness: t_c±0.25 mm

Chamfer: 0.35 mm at 45° typical

Concentricity: ≤ 0.05 mm

Paraxial Focal Length: *f* ±0.5% typical

Antireflection Coating: Wavelength user specified
Narrowband: R ≤ 0.25% per surface
Broadband: R_{avg} ≤ 0.75% per surface

Clear Aperture (CA): ≥ 85% of central diameter

Damage Threshold: 4 J/cm², 20 nsec, 20 Hz @ 1064 nm

Semi Custom

Add a coating to a Standard Uncoated Product

YOUR CUSTOM PART NUMBER	PLCX-15.0-19.1-SF11	—	1550

WAVELENGTH OF AR COATING (nm); for uncoated leave blank

425-675	633-1064	1050-1600	1064/532
532	800	1053	1550
633	1030	1064	

Standard Uncoated Products

f (mm)	Ø (mm)	f/#	f_b (mm)	t_c (mm)	t_e (mm)	r (mm)	*f* @780 nm	*f* @800 nm	*f* @1300 nm	*f* @1550 nm	PART NUMBER
N-SF11 Plano-Convex Lenses											
25.0	15.0	2.0	22.9	3.8	2.3	19.1	24.7	25.0	25.5	25.6	PLCX-15.0-19.1-SF11
50.0	25.4	2.3	47.9	3.8	1.6	38.1	49.2	49.8	50.9	51.2	PLCX-25.4-38.1-SF11
76.0	25.4	3.5	73.9	3.8	2.4	58.2	75.1	76.1	77.7	78.1	PLCX-25.4-58.2-SF11
175.0	25.4	8.1	172.9	3.8	3.2	134.1	173.1	175.4	179.0	180.1	PLCX-25.4-134.1-SF11

CVI Laser Optics

STANDARD N-BK7 BI-CONVEX LENSES

Bi-convex or symmetric-convex lenses have two convex surfaces with identical radii. They have positive focal lengths and form both real and virtual images.

They are recommended for virtual imaging of real objects and for positive conjugate ratios from approximately 0.2 to 5 (values are wavelength sensitive). Due to the symmetry, aberrations such as coma, distortion, and chromatic aberration almost exactly cancel out at unit conjugate ratio. Aberrations increase as conjugate ratios depart from unity.

The standard quality LDX lenses can be used for general purpose imaging and low-power laser applications. For high power lasers and performance critical applications we recommend using the laser grade lenses.

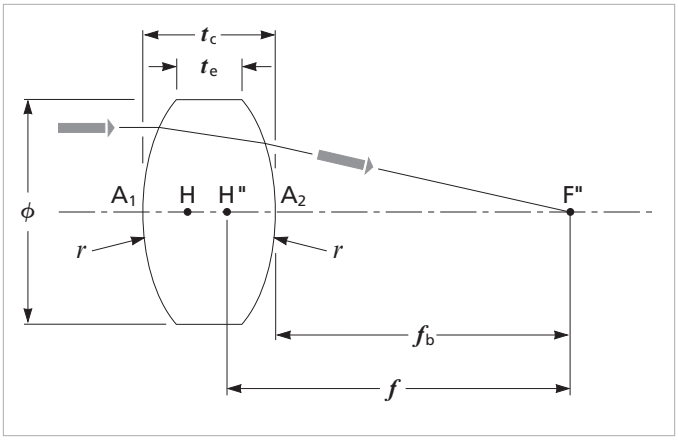

Bi-convex lens

Specifications

Product Code: LDX-C

Optical Material: N-BK7

Clear Aperture (CA): ≥ 90% of central diameter

Surface Irregularity: λ/2 p-v at 633 nm before coating (applies to any 25 mm diameter within CA for Ø > 25 mm)

Surface Quality: 60-40 scratch and dig

Diameter: Ø+0/–0.10 mm

Center Thickness: tc±0.2 mm

Chamfer: 0.25 – 0.50 mm at 45°

Centration: ≤ 3 arc minutes

Paraxial Focal Length: *f* ±2% (±4% for LDX-5.0-4.3-C)

Design Wavelength: 546.1 nm

Antireflection Coating: Wavelength user specified

Semi Custom

Add a coating to a Standard Uncoated Product

YOUR CUSTOM PART NUMBER	LDX-10.0-9.5-C	—	415-700

WAVELENGTH OF AR COATING (nm); for uncoated leave blank

415-700	633-1064

Standard Uncoated Products

f (mm)	Ø (mm)	f/#	f_b (mm)	t_c (mm)	t_e (mm)	r (mm)	PART NUMBER
Standard N-BK7 Bi-Convex Lenses							
4.5	5.0	0.9	3.8	2.0	0.4	4.3	LDX-5.0-4.3-C
7.0	5.0	1.4	5.9	3.0	2.0	6.7	LDX-5.0-6.7-C
10.0	5.0	2.0	9.1	2.6	2.0	9.9	LDX-5.0-9.9-C
10.0	10.0	1.0	8.3	4.8	1.9	9.5	LDX-10.0-9.5-C
15.0	14.5	1.0	12.9	5.9	2.0	14.5	LDX-14.5-14.5-C
20.0	15.0	1.3	18.3	4.9	2.0	19.9	LDX-15.0-19.9-C
20.0	25.0	0.8	15.6	11.8	2.1	18.5	LDX-25.0-18.5-C
25.0	25.0	1.0	21.9	8.9	2.0	24.3	LDX-25.0-24.3-C
30.0	30.0	1.0	26.4	10.3	2.0	29.3	LDX-30.0-29.3-C
38.1	38.1	1.1	33.8	12.4	1.9	37.3	LDX-38.1-37.3-C
40.0	50.0	0.8	31.9	22.2	2.9	37.3	LDX-50-37.3-C
50.0	25.0	2.0	48.3	5.1	2.0	51.0	LDX-25.0-51.0-C
50.0	50.0	1.0	44.5	15.8	2.1	49.0	LDX-50.0-49.0-C
75.0	25.0	3.0	73.7	4.0	2.0	77.1	LDX-25.0-77.1-C
75.0	50.0	1.5	71.1	11.5	3.0	75.8	LDX-50.0-75.8-C
88.9	25.4	3.9	87.6	3.8	2.0	91.6	LDX-25.4-91.6-C

IDEX OPTICS & PHOTONICS MARKETPLACE

LASER QUALITY N-BK7 BI-CONVEX LENSES

Spherical biconvex lenses are equiconvex: r1 = r2. Other dimensions and focal lengths are available for OEM applications. Contact us for pricing and delivery.

- For 1:1 imaging and relay applications
- Laser quality: λ/10 surface figure, 10-5 surface quality
- Low-loss, high-energy AR coatings

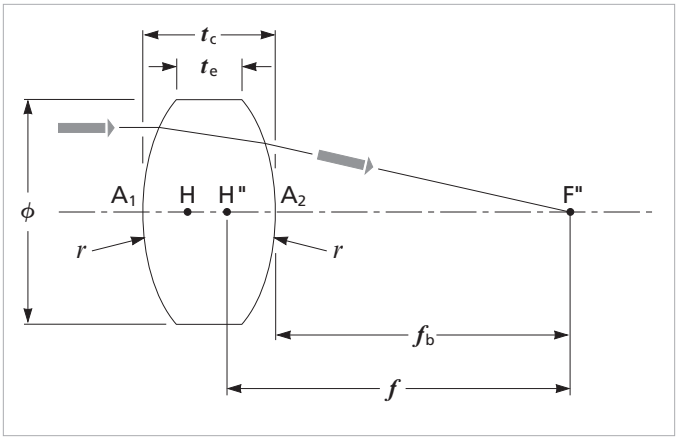

Bi-convex lens

Specifications

Product Code: BICX-C

Optical Material: N-BK7

Surface Figure: λ/10 p-v at 633 nm before coating

Surface Quality: 10-5 scratch and dig

Diameter: Ø+0/–0.25 mm

Center Thickness: t_c±0.25 mm

Chamfer: 0.35 mm at 45° typical

Concentricity: ≤ 0.05 mm

Paraxial Focal Length: f±0.5% typical

Antireflection Coating: Wavelength user specified
Narrowband: R ≤ 0.25% per surface
Broadband: R_{avg} ≤ 0.5% per surface

Clear Aperture (CA): ≥ 85% of central diameter

Damage Threshold:
Pulsed, Narrowband: 15 J/cm², 20 nsec, 20 Hz @ 1064 nm
Pulsed, Broadband: 10 J/cm², 20 nsec, 20 Hz @ 1064 nm
cw: 1 MW/cm² @ 1064 nm

Semi Custom

Add a coating to a Standard Uncoated Product

YOUR CUSTOM PART NUMBER	BICX-25.4-102.4-C	—	1064

WAVELENGTH OF AR COATING (nm); for uncoated leave blank

415-700	780	1050-1600	1550
532	800	1053	
633	808	1064	
633-1064	1030	1064/532	

Standard Uncoated Products

f (mm)	Ø (mm)	f/#	f_b (mm)	t_c (mm)	t_e (mm)	r (mm)	f@ 532 nm	f@ 633 nm	f@ 1064 nm	f@ 1319 nm	PART NUMBER
Laser Quality N-BK7 Bi-Convex Lenses											
20.0	15.0	1.6	18.3	4.9	1.9	19.7	19.8	20.0	20.3	20.4	BICX-15.0-19.7-C
25.0	12.7	2.3	23.9	3.3	1.7	25.2	24.8	25.0	25.4	25.6	BICX-12.7-25.2-C
25.0	25.4	1.2	21.4	10.0	2.7	23.9	24.8	25.0	25.4	25.2	BICX-25.4-23.9-C
40.0	25.0	1.9	38.0	5.9	1.9	40.2	39.7	40.0	40.7	40.9	BICX-25.0-40.2-C
50.0	25.4	2.3	48.3	5.1	1.9	50.6	49.6	50.0	50.8	51.1	BICX-25.4-50.6-C
50.0	50.8	1.2	44.9	14.6	0.4	48.9	49.6	50.0	50.8	51.1	BICX-50.8-48.9-C
75.0	25.4	3.5	73.6	4.1	2.0	76.6	74.4	75.0	76.3	76.7	BICX-25.4-76.6-C
100.0	25.4	4.6	98.6	4.2	2.6	102.4	99.3	100.1	101.8	102.1	BICX-25.4-102.4-C
150.0	25.4	6.9	148.6	4.2	3.2	154.0	148.9	150.2	152.7	153.6	BICX-25.4-154.0-C
150.0	50.8	3.5	147.2	8.3	4.2	153.4	148.8	150.0	152.5	153.5	BICX-50.8-153.4-C
200.0	25.4	9.3	198.6	4.2	3.4	205.6	198.5	200.2	203.5	204.8	BICX-25.4-205.6-C
250.0	25.4	11.6	248.6	4.2	3.6	257.1	247.9	250.0	254.2	256.7	BICX-25.4-257.1-C
300.0	25.4	13.9	298.7	4.0	3.5	308.5	297.3	299.8	304.8	307.1	BICX-25.4-308.5-C
300.0	50.8	6.9	297.2	8.3	6.3	308.5	297.6	300.2	305.2	307.8	BICX-50.8-308.5-C
400.0	50.8	9.3	397.7	7.0	5.4	411.5	396.7	400.0	406.7	409.1	BICX-50.8-411.5-C
500.0	50.8	11.6	497.7	7.0	5.7	514.6	495.9	500.1	508.4	511.5	BICX-50.8-514.6-C

IDEX OPTICS & PHOTONICS MARKETPLACE

CVI Laser Optics

STANDARD FUSED SILICA BI-CONVEX LENSES

The UV-grade fused silica LUD lenses offer high transmission in the ultraviolet and visible range. With 40-20 surface quality and λ/4 surface figure, these standard quality bi-convex lenses are an economical alternative to laser grade lenses which are recommended for more demanding applications.

- Equiconvex lenses
- For 1:1 imaging and relay applications

Specifications

Optical Material: UV-grade fused silica

Clear Aperture (CA): ≥ 90% of central diameter

Surface Irregularity: λ/4 p-v at 633 nm before coating

Surface Quality: 40-20 scratch and dig

Diameter: Ø+0/–0.10 mm

Center Thickness: t_c±0.2 mm

Chamfer: 0.05 – 0.20 mm at 45°

Centration: ≤ 3 arc minutes

Paraxial Focal Length: *f*±2%

Design Wavelength: 404.7 nm

Antireflection Coating: Wavelength user specified

Semi Custom

Add a coating to a Standard Uncoated Product

YOUR CUSTOM PART NUMBER	LUD-25.0-21.8-UV	—	355-532

WAVELENGTH OF AR COATING (nm); for uncoated leave blank

248-355	355-532

Standard Uncoated Products

f (mm)	Ø (mm)	f/#	f_b (mm)	t_c (mm)	t_e (mm)	r (mm)	PART NUMBER
Standard Fused Silica Bi-Convex Lenses							
25.0	25.0	1.1	21.3	10.0	2.1	21.8	LUD-25.0-21.8-UV
50.0	50.0	1.1	43.4	18.0	2.4	43.9	LUD-50.0-43.9-UV
75.0	25.0	3.3	73.	3 5.0	2.7	69.6	LUD-25.0-69.6-UV

CVI Laser Optics

LASER QUALITY FUSED SILICA BI-CONVEX LENSES

Spherical biconvex lenses are equiconvex: r1 = r2. Other dimensions and focal lengths are available for OEM applications.

- For 1:1 imaging applications, beam expanders, and beam relay applications
- Laser quality: λ/10 surface figure, 10-5 surface quality
- Low-loss, high-energy AR coatings

Specifications

Product Code: BICX-UV

Optical Material: UV-grade fused silica

Surface Figure: λ/10 p-v at 633 nm before coating

Surface Quality: 10-5 scratch and dig

Diameter: Ø +0/–0.25 mm

Center Thickness: t_c±0.25 mm

Chamfer: 0.35 mm at 45° typical

Concentricity: ≤ 0.05 mm

Paraxial Focal Length: *f* ±0.5% typical

Antireflection Coating: Wavelength user specified
Narrowband: R ≤ 0.25% per surface
Broadband: R_{avg} ≤ 0.5% per surface

Clear Aperture (CA): ≥ 85% of central diameter

Damage Threshold:
Pulsed, Narrowband: 15 J/cm², 20 nsec, 20 Hz @ 1064 nm
Pulsed, Broadband: 10 J/cm², 20 nsec, 20 Hz @ 1064 nm
cw: 1 MW/cm² @ 1064 nm

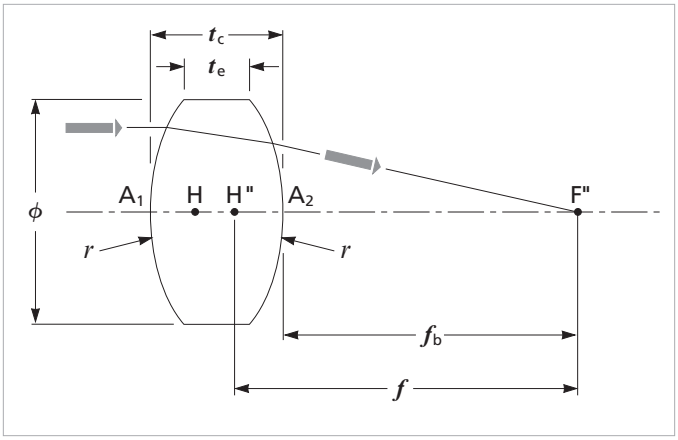

Bi-convex lens

Semi Custom

Add a coating to a Standard Uncoated Product

YOUR CUSTOM PART NUMBER	BICX-25.4-154.0-UV	—	355

WAVELENGTH OF AR COATING (nm); for uncoated leave blank

193	355-532	633	808	1064/532
248	400	633-1064	1030	1550
248-355	405	700-900	1050-1600	
266	415-700	780	1053	
355	532	800	1064	

IDEX OPTICS & PHOTONICS MARKETPLACE

Standard Uncoated Products

f (mm)	Ø (mm)	f/#	f_b (mm)	t_c (mm)	t_e (mm)	r (mm)	f @ 266 nm	f @ 355 nm	f @ 532 nm	f @ 1064 nm	PART NUMBER
Laser Quality Fused Silica Bi-Convex Lenses											
15.0	12.7	1.4	13.0	5.9	2.9	14.4	15.5	16.2	16.7	17.1	BICX-12.7-14.4-UV
20.0	15.0	1.6	18.4	4.9	1.9	19.7	20.6	21.6	22.3	22.8	BICX-15.0-19.7-UV
25.0	12.7	2.3	23.9	3.3	1.7	25.2	25.8	27.0	27.9	28.6	BICX-12.7-25.2-UV
25.0	25.4	1.2	21.5	10.0	2.7	23.9	25.7	26.9	27.8	28.4	BICX-25.4-23.9-UV
35.0	15.0	2.7	33.8	3.6	2.0	35.4	36.0	37.8	39.0	40.0	BICX-15.0-35.4-UV
38.0	25.4	1.8	35.9	6.3	1.9	38.1	39.2	41.1	42.5	43.5	BICX-25.4-38.1-UV
50.0	25.4	2.3	48.3	5.1	1.9	50.6	51.5	54.0	55.8	57.2	BICX-25.4-50.6-UV
50.0	38.1	1.5	45.7	12.7	5.0	49.3	51.5	54.0	55.8	57.0	BICX-38.1-49.3-UV
50.0	50.8	1.2	45.1	14.6	0.4	48.9	51.5	54.0	55.7	57.0	BICX-50.8-48.9-UV
60.0	25.4	2.8	58.5	4.5	1.8	61.0	61.8	64.8	67.0	68.6	BICX-25.4-61.0-UV
65.0	25.4	3.0	63.0	6.0	3.5	64.4	65.5	68.7	70.9	72.7	BICX-25.4-64.4-UV
75.0	25.4	3.5	73.7	4.1	2.0	76.6	77.3	81.2	83.8	85.9	BICX-25.4-76.6-UV
75.0	50.0	1.8	71.6	10.4	1.9	75.5	77.3	81.1	83.8	85.8	BICX-50.0-75.5-UV
100.0	25.4	4.6	98.6	4.2	2.6	102.4	103.2	108.1	111.9	114.5	BICX-25.4-102.4-UV
100.0	50.8	2.3	97.3	8.2	1.7	101.6	103.1	108.1	111.7	114.4	BICX-50.8-101.6-UV
125.0	25.4	5.8	123.6	4.2	2.9	128.2	129.0	135.2	139.9	143.1	BICX-25.4-128.2-UV
125.0	50.8	2.9	122.7	7.2	2.1	127.5	128.8	135.1	139.6	143.0	BICX-50.8-127.5-UV
150.0	25.4	6.9	148.6	4.2	3.0	154.0	154.8	162.2	167.9	171.7	BICX-25.4-154.0-UV
150.0	50.0	3.5	147.8	6.8	2.7	153.4	154.6	162.3	167.7	171.8	BICX-50.0-153.4-UV
200.0	25.4	9.3	198.6	4.2	3.4	205.6	206.4	216.4	223.9	229.1	BICX-25.4-205.6-UV
200.0	50.8	4.6	197.3	8.4	5.2	205.2	206.7	216.4	224.1	229.1	BICX-50.8-205.2-UV
300.0	50.0	7.1	297.3	8.3	6.3	308.5	310.1	324.7	336.2	343.8	BICX-50.0-308.5-UV
500.0	50.8	11.6	498.1	6.0	4.7	514.6	515.9	540.9	559.5	572.7	BICX-50.8-514.6-UV
550.0	25.4	25.5	549.2	2.4	2.1	572.7	573.5	601.9	622.0	637.3	BICX-25.4-572.7-UV
1000.0	25.4	46.3	999.2	2.4	2.2	1029.8	1030.9	1082.0	1118.0	1145.6	BICX-25.4-1029.8-UV
1000.0	50.8	23.2	998.1	6.0	5.4	1029.8	1030.9	1082.0	1118.1	1145.6	BICX-50.8-1029.8-UV
2000.0	25.4	92.6	1999.3	2.2	2.1	2060.0	2061.7	2163.9	2236.1	2291.1	BICX-25.4-2060.0-UV
2000.0	50.8	46.3	1998.1	6.0	5.7	2060.0	2061.7	2163.9	2236.1	2291.1	BICX-50.8-2060.0-UV

CVI Laser Optics

STANDARD N-BK7 PLANO-CONCAVE LENSES

Plano-concave lenses have one flat and one concave surface. They have a negative focal length and are often used to expand light or to increase focal lengths in optical systems.

Plano-concave glass lenses made from N-BK7 exhibit excellent transmissive properties from below 400 nm to above 1 µm.

These standard quality plan-concave N-BK7 lenses can be used in a wide range of applications except for high power lasers or when high wavefront quality is required.

Specifications

Product Code: LPK-C

Optical Material: N-BK7

Clear Aperture (CA): Ø–2Δ

Surface Irregularity: λ/2 p-v at 633 nm before coating (applies to any 25 mm diameter within CA for Ø > 25 mm)

Surface Quality: 60-40 scratch and dig

Diameter: Ø+0/–0.10 mm

Center Thickness: t_c±0.2 mm

Chamfer: 0.05 – 0.20 mm at 45°

Flat Annulus Width (Δ): 0.2 mm for Ø ≤ 40 mm, 0.4 mm for Ø > 40 mm (+0/–70%)

Centration: ≤ 3 arc minutes

Paraxial Focal Length: f±2%

Design Wavelength: 546.1 nm

Antireflection Coating: Wavelength user specified

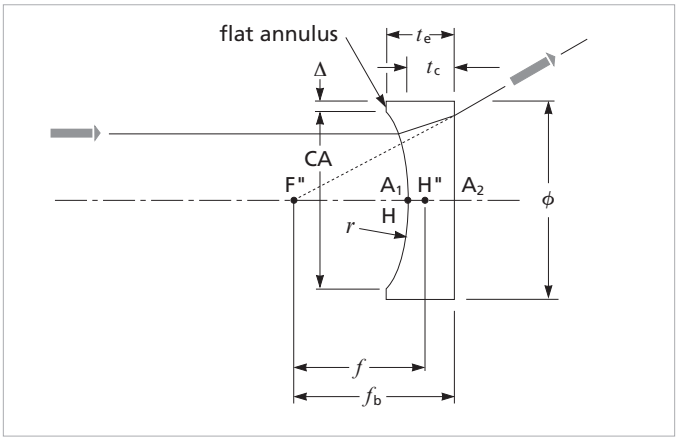

Standard plano-concave lens

Semi Custom

Add a coating to a Standard Uncoated Product

YOUR CUSTOM PART NUMBER	LPK-12.5-6.5-C	—	415-700

WAVELENGTH OF AR COATING (nm); for uncoated leave blank

415-700	633-1064	1064

IDEX OPTICS & PHOTONICS MARKETPLACE

Standard Uncoated Products

f (mm)	Ø (mm)	f/#	f_b (mm)	t_c (mm)	t_e (mm)	r (mm)	PART NUMBER
Standard N-BK7 Plano-Concave Lenses							
–10.0	5.0	–2.0	–11.3	2.0	2.5	5.2	LPK-5.0-5.2-C
–12.5	12.5	–1.0	–13.8	2.0	6.2	6.5	LPK-12.5-6.5-C
–15.0	8.0	–1.9	–16.3	2.0	3.0	7.8	LPK-8.0-7.8-C
–15.0	12.5	–1.2	–16.3	2.0	4.9	7.8	LPK-12.5-7.8-C
–20.0	10.0	–2.0	–21.3	2.0	3.2	10.4	LPK-10.0-10.4-C
–20.0	12.5	–1.6	–21.3	2.0	4.0	10.4	LPK-12.5-10.4-C
–25.0	12.5	–2.0	–26.3	2.0	3.5	13.0	LPK-12.5-13.0-C
–25.0	25.0	–1.0	–26.3	2.0	10.9	13.0	LPK-25.0-13.0-C
–30.0	12.5	–2.4	–31.3	2.0	3.2	15.6	LPK-12.5-15.6-C
–30.0	20.0	–1.5	–31.3	2.0	5.5	15.6	LPK-20.0-15.6-C
–50.0	12.5	–4.0	–51.3	2.0	2.7	25.9	LPK-12.5-25.9-C
–50.0	20.0	–2.5	–51.3	2.0	3.9	25.9	LPK-20.0-25.9-C
–50.0	25.0	–2.0	–51.3	2.0	4.6	25.9	LPK-25.0-25.9-C
–50.0	30.0	–1.7	–51.3	2.0	6.6	25.9	LPK-30.0-25.9-C
–75.0	12.5	–6.0	–76.3	2.0	2.5	38.9	LPK-12.5-38.9-C
–75.0	25.0	–3.0	–76.3	2.0	4.0	38.9	LPK-25.0-38.9-C
–75.0	50.0	–1.5	–77.0	3.0	11.8	38.9	LPK-50.0-38.9-C
–100.0	12.5	–8.0	–101.3	2.0	2.4	51.9	LPK-12.5-51.9-C
–100.0	25.0	–4.0	–101.3	2.0	3.5	51.9	LPK-25.0-51.9-C
–100.0	50.0	–2.0	–101.3	2.0	8.2	51.9	LPK-50.0-51.9-C
–125.0	50.0	–2.5	–127.0	3.0	7.8	64.8	LPK-50.0-64.8-C
–150.0	25.0	–6.0	–151.3	2.0	3.0	77.8	LPK-25.0-77.8-C
–150.0	50.0	–3.0	–152.0	3.0	7.0	77.8	LPK-50.0-77.8-C
–200.0	25.0	–8.0	–201.3	2.0	2.7	103.7	LPK-25.0-103.7-C
–200.0	50.0	–4.0	–201.3	2.0	5.0	103.7	LPK-50.0-103.7-C
–250.0	25.0	–10.0	–251.3	2.0	2.6	129.7	LPK-25.0-129.7-C
–250.0	50.0	–5.0	–252.0	3.0	5.4	129.7	LPK-50.0-129.7-C
–300.0	25.0	–12.0	–301.3	2.0	2.5	155.6	LPK-25.0-155.6-C
–500.0	25.0	–20.0	–501.3	2.0	2.3	259.4	LPK-25.0-259.4-C
–500.0	50.0	–10.0	–502.0	3.0	4.2	259.4	LPK-50.0-259.4-C
–700.0	25.0	–28.0	–701.3	2.0	2.2	363.1	LPK-25.0-363.1-C
–1000.0	25.0	–40.0	–1001.3	2.0	2.2	518.7	LPK-25.0-518.7-C
–1000.0	50.0	–20.0	–1002.0	3.0	3.6	518.7	LPK-50.0-518.7-C

CVI Laser Optics

LASER QUALITY N-BK7 PLANO-CONCAVE LENSES

- Diverging lens for beam expansion
- Laser quality: λ/10 surface figure, 10-5 surface quality
- Low-loss high-energy AR coatings

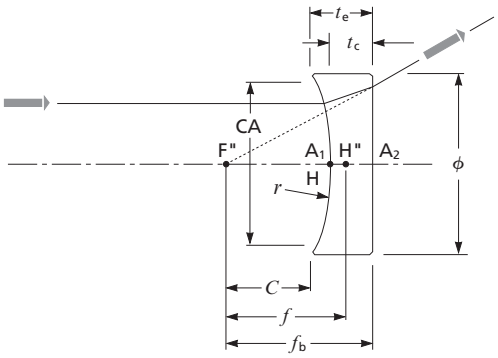

Laser quality plano-concave lens

Specifictions

Product Code: PLCC-C

Optical Material: N-BK7

Surface Figure: λ/10 p-v at 633 nm before coating

Surface Quality: 10-5 scratch and dig

Diameter: Ø+0/–0.25 mm

Center Thickness: t_c±0.25 mm

Chamfer: 0.35 mm at 45° typical

Concentricity: ≤ 0.05 mm

Paraxial Focal Length: *f* ±0.5% typical

Antireflection Coating: Wavelength user specified
Narrowband: R ≤ 0.25% per surface
Broadband: R_{avg} ≤ 0.5% per surface

Clear Aperture (CA): ≥ 85% of central diameter

Damage Threshold:
Pulsed, Narrowband: 15 J/cm², 20 nsec, 20 Hz @ 1064 nm
Pulsed, Broadband: 10 J/cm², 20 nsec, 20 Hz @ 1064 nm
cw: 1 MW/cm² @ 1064 nm

Standard Coated Products

f (mm)	Ø (mm)	r (mm)	PART NUMBER
PLCC-C Laser Quality Lenses for 1064 nm			
-30.0	12.7	15.5	PLCC-12.7-15.5-C-1064
-50.0	10.0	25.8	PLCC-10.0-25.8-C-1064
-50.0	25.4	25.8	PLCC-25.4-25.8-C-1064
-75.0	25.4	38.6	PLCC-25.4-38.6-C-1064
-100.0	25.4	51.5	PLCC-25.4-51.5-C-1064
-200.0	25.4	103.0	PLCC-25.4-103.0-C-1064
-200.0	50.8	103.0	PLCC-50.8-103.0-C-1064
-250.0	25.4	128.8	PLCC-25.4-128.8-C-1064
-500.0	25.4	257.5	PLCC-25.4-257.5-C-1064

IDEX OPTICS & PHOTONICS MARKETPLACE

Semi Custom Use the selection menu below to add a coating to a Standard Uncoated Product

YOUR CUSTOM PART NUMBER PLCC-25.4-25.8-C — 633

WAVELENGTH OF AR COATING (nm); for uncoated leave blank

415-700	633	780	808	1050-1600	1064	1550
532	633-1064	800	1030	1053	1064/532	

Standard Uncoated Products

f (mm)	Ø (mm)	f/#	f_b (mm)	t_c (mm)	t_e (mm)	r (mm)	f @ 532 nm	f @ 633 nm	f @ 1064 nm	f @ 1319 nm	PART NUMBER
Laser Quality N-BK7 Plano-Concave Lenses											
–20.0	10.0	–2.4	–21.4	2.0	3.3	10.3	–19.8	–20.0	–20.3	–20.5	PLCC-10.0-10.3-C
–25.0	10.0	–2.9	–26.4	2.0	3.0	12.9	–24.8	–25.0	–25.5	–25.6	PLCC-10.0-12.9-C
–25.0	15.0	–2.0	–26.4	2.0	4.4	12.9	–24.8	–25.0	–25.5	–25.6	PLCC-15.0-12.9-C
–30.0	12.7	–2.8	–31.4	2.0	3.3	15.5	–29.8	–30.1	–30.6	–30.8	PLCC-12.7-15.5-C
–30.0	25.4	–1.4	–31.4	2.0	8.6	15.5	–29.8	–30.1	–30.6	–30.8	PLCC-25.4-15.5-C
–38.0	25.4	–1.8	–39.4	2.0	6.7	19.6	–37.7	–38.1	–38.7	–38.9	PLCC-25.4-19.6-C
–50.0	10.0	–5.9	–51.4	2.0	2.5	25.8	–49.7	–50.1	–50.9	–51.2	PLCC-10.0-25.8-C
–50.0	12.7	–4.6	–51.4	2.0	2.8	25.8	–49.7	–50.1	–50.9	–51.2	PLCC-12.7-25.8-C
–50.0	25.4	–2.3	–52.1	3.0	6.3	25.8	–49.7	–50.1	–50.9	–51.2	PLCC-25.4-25.8-C
–75.0	15.0	–5.9	–76.4	2.0	2.7	38.6	–74.3	–74.9	–76.2	–76.7	PLCC-15.0-38.6-C
–75.0	25.4	–3.5	–77.1	3.0	5.1	38.6	–74.3	–74.9	–76.2	–76.7	PLCC-25.4-38.6-C
–100.0	15.0	–7.8	–101.4	2.0	2.5	51.5	–99.1	–100.0	–101.7	–102.3	PLCC-15.0-51.5-C
–100.0	25.4	–4.6	–101.8	2.6	4.2	51.5	–99.1	–100.0	–101.7	–102.3	PLCC-25.4-51.5-C
–100.0	50.8	–2.3	–101.4	2.0	8.7	51.5	–99.1	–100.0	–101.7	–102.3	PLCC-50.8-51.5-C
–125.0	10.0	–14.7	–126.4	2.0	2.2	64.4	–124.0	–125.0	–127.1	–127.9	PLCC-10.0-64.4-C
–125.0	25.4	–5.8	–127.0	2.9	4.2	64.4	–124.0	–125.0	–127.1	–127.9	PLCC-25.4-64.4-C
–150.0	15.0	–11.8	–151.6	2.3	2.7	77.3	–148.8	–150.1	–152.6	–153.5	PLCC-15.0-77.3-C
–150.0	25.4	–6.9	–152.1	3.1	4.2	77.3	–148.8	–150.1	–152.6	–153.5	PLCC-25.4-77.3-C
–176.0	25.4	–8.2	–178.3	3.3	4.2	90.8	–174.8	–176.3	–179.2	–180.4	PLCC-25.4-90.8-C
–200.0	25.4	–9.3	–202.3	3.4	4.2	103.0	–198.3	–200.0	–203.3	–204.6	PLCC-25.4-103.0-C
–200.0	50.8	–4.6	–203.3	4.8	8.0	103.0	–198.3	–200.0	-203.3	–204.6	PLCC-50.8-103.0-C
–250.0	25.4	–11.6	–252.7	4.0	4.6	128.8	–247.9	–250.1	–254.2	–255.8	PLCC-25.4-128.8-C
–250.0	50.8	–5.8	–254.1	6.0	8.5	128.8	–247.9	–250.1	–254.2	–255.8	PLCC-50.8-128.8-C
–500.0	25.4	–23.2	–502.7	3.9	4.2	257.5	–495.7	–499.9	–508.3	–511.5	PLCC-25.4-257.5-C
–500.0	50.8	–11.6	–504.8	7.0	8.3	257.5	–495.7	–499.9	–508.3	–511.5	PLCC-50.8-257.5-C
–600.0	25.4	–27.8	–602.7	3.9	4.2	309.1	–595.0	–600.1	–610.1	–614.0	PLCC-25.4-309.1-C

CVI Laser Optics

STANDARD FUSED SILICA PLANO-CONCAVE LENSES

UV-grade synthetic fused silica lenses extend transmission to below 200 nm and have superior thermal and mechanical characteristics.

The LUK product line covers the focal length range from -10 mm to -350 mm with the most common diameters. These standard quality plano-concave fused silica lenses are an economical alternative to laser grade lenses which are recommended for more demanding applications.

Specifications

Product Code: LUK-UV

Optical Material: UV-grade fused silica

Clear Aperture (CA): Ø–2Δ

Surface Irregularity: λ/4 p-v at 633 nm before coating

Surface Quality: 40-20 scratch and dig

Diameter: Ø+0/–0.10 mm

Center Thickness: t_c±0.2 mm

Chamfer: 0.05 – 0.20 mm at 45°

Flat Annulus Width (Δ): 0.5 +0/-0.25 mm

Centration: ≤ 3 arc minutes

Paraxial Focal Length: *f*±1%

Design Wavelength: 404.7 nm

Antireflection Coating: Wavelength user specified

Semi Custom

Add a coating to a Standard Uncoated Product

YOUR CUSTOM PART NUMBER	LUK-12.5-7.0-UV	— 355-532

WAVELENGTH OF AR COATING (nm); for uncoated leave blank		
248-355	355-532	1064

Standard Uncoated Products

f (mm)	Ø (mm)	f/#	f_b (mm)	t_c (mm)	t_e (mm)	r (mm)	PART NUMBER
Standard Fused Silica Plano-Concave Lenses							
–10.0	6.3	–2.1	–11.4	2.0	2.8	4.7	LUK-6.3-4.7-UV
–12.5	6.3	–2.6	–13.9	2.0	2.6	5.9	LUK-6.3-5.9-UV
–15.0	12.5	–1.4	–16.4	2.0	5.0	7.0	LUK-12.5-7.0-UV
–25.0	12.5	–2.4	–26.7	2.5	4.0	11.7	LUK-12.5-11.7-UV
–30.0	12.5	–2.9	–32.0	3.0	4.2	14.1	LUK-12.5-14.1-UV
–37.5	25.0	–1.7	–40.9	5.0	9.7	17.6	LUK-25.0-17.6-UV
–50.0	25.0	–2.3	–53.4	5.0	8.3	23.5	LUK-25.0-23.5-UV
–75.0	25.0	–3.5	–78.4	5.0	7.1	35.2	LUK-25.0-35.2-UV
–100.0	12.5	–9.7	–102.7	4.0	4.4	47.0	LUK-12.5-47.0-UV
–100.0	25.0	–4.6	–103.4	5.0	6.6	47.0	LUK-25.0-47.0-UV
–125.0	25.0	–5.8	–128.4	5.0	6.2	58.7	LUK-25.0-58.7-UV
–150.0	25.0	–6.9	–153.4	5.0	6.0	70.4	LUK-25.0-70.4-UV
–250.0	25.0	–11.6	–254.1	6.0	6.6	117.4	LUK-25.0-117.4-UV
–350.0	25.0	–16.2	–354.1	6.0	6.4	164.4	LUK-25.0-164.4-UV

For the definition of the flat annulus width, see the standard plano-concave lens diagram page 286.

IDEX OPTICS & PHOTONICS MARKETPLACE

CVI Laser Optics

LASER QUALITY FUSED SILICA PLANO-CONCAVE LENSES

- Diverging lens for beam expansion
- Laser quality: λ/10 surface figure, 10-5 surface quality
- Low-loss high-energy AR coatings

Specifications

Product Code: PLCC-UV

Optical Material: UV-grade fused silica

Surface Figure: λ/10 p-v at 633 nm before coating

Surface Quality: 10-5 scratch and dig

Diameter: Ø+0/–0.25 mm

Center Thickness: t_c±0.25 mm

Chamfer: 0.35 mm at 45° typical

Concentricity: ≤ 0.05 mm

Paraxial Focal Length: *f* ±0.5% typical

Antireflection Coating: Wavelength user specified
Narrowband: R ≤ 0.25% per surface
Broadband: R_{avg} ≤ 0.5% per surface

Clear Aperture (CA): ≥ 85% of central diameter

Damage Threshold:
Pulsed Narrowband: 15 J/cm², 20 nsec, 20 Hz @ 1064 nm
Pulsed Broadband: 10 J/cm², 20 nsec, 20 Hz @ 1064 nm
cw: 1 MW/cm² @ 1064 nm

Standard Coated Products

f (mm)	Ø (mm)	r (mm)	PART NUMBER
PLCC-UV Laser Quality Lenses for 355 nm			
-20.0	10.0	10.3	PLCC-10.0-10.3-UV-355
-25.0	15.0	12.9	PLCC-15.0-12.9-UV-355
-40.0	25.4	19.6	PLCC-25.4-19.6-UV-355
-50.0	25.4	25.8	PLCC-25.4-25.8-UV-355
-75.0	25.4	38.6	PLCC-25.4-38.6-UV-355
-100.0	15.0	51.5	PLCC-15.0-51.5-UV-355
-100.0	25.4	51.5	PLCC-25.4-51.5-UV-355
-150.0	25.4	77.3	PLCC-25.4-77.3-UV-355
-300.0	25.4	154.5	PLCC-25.4-154.5-UV-355
PLCC-UV Laser Quality Lenses for 532 nm			
–25.0	10.0	12.9	PLCC-10.0-12.9-UV-532
–50.0	25.4	25.8	PLCC-25.4-25.8-UV-532
–100.0	25.4	51.5	PLCC-25.4-51.5-UV-532
PLCC-UV Laser Quality Lenses for 1064 nm			
-20.0	10.0	10.3	PLCC-10.0-10.3-UV-1064
-50.0	15.0	25.8	PLCC-15.0-25.8-UV-1064
-50.0	25.4	25.8	PLCC-25.4-25.8-UV-1064
-75.0	15.0	38.6	PLCC-15.0-38.6-UV-1064
-75.0	25.4	38.6	PLCC-25.4-38.6-UV-1064
-100.0	25.4	51.5	PLCC-25.4-51.5-UV-1064
-125.0	25.4	64.4	PLCC-25.4-64.4-UV-1064
-150.0	25.4	77.3	PLCC-25.4-77.3-UV-1064
-200.0	25.4	103.0	PLCC-25.4-103.0-UV-1064
-300.0	25.4	154.5	PLCC-25.4-154.5-UV-1064
-350.0	25.4	180.3	PLCC-25.4-180.3-UV-1064
-400.0	25.4	206.6	PLCC-25.4-206.6-UV-1064
-600.0	25.4	309.1	PLCC-25.4-309.1-UV-1064
-1000.0	25.4	515.1	PLCC-25.4-515.1-UV-1064
-1500.0	25.4	772.6	PLCC-25.4-772.6-UV-1064

Semi Custom

Add a coating to a Standard Uncoated Product (next page)

YOUR CUSTOM PART NUMBER PLCC-25.4-25.8-UV — 355

WAVELENGTH OF AR COATING (nm); for uncoated leave blank

193	**248-355**	**355**	**400**	**415-700**	**633**	**700-900**	**800**	**1030**	**1053**	**1064/532**
248	**266**	**355-532**	**405**	**532**	**633-1064**	**780**	**808**	**1050-1600**	**1064**	**1550**

Standard Uncoated Products

f (mm)	Ø (mm)	f/#	f_b (mm)	t_c (mm)	t_e (mm)	r (mm)	f@ 266 nm	f@ 355 nm	f@ 532 nm	f@ 1064 nm	PART NUMBER
Laser Quality Fused Silica Plano-Concave Lenses											
–20.0	10.0	–2.4	–21.4	2.0	3.3	10.3	–20.6	–21.6	–22.4	–22.9	PLCC-10.0-10.3-UV
–22.0	12.7	–2.0	–23.4	2.1	4.1	11.2	–22.4	–23.5	–24.3	–24.9	PLCC-12.7-11.2-UV
–25.0	10.0	–2.9	–26.4	2.0	3.0	12.9	–25.8	–27.1	–28.0	–28.7	PLCC-10.0-12.9-UV
–25.0	15.0	–2.0	–26.4	2.0	4.4	12.9	–25.8	–27.1	–28.0	–28.7	PLCC-15.0-12.9-UV
–25.0	25.4	–1.2	–26.4	2.0	11.9	13.1	–26.2	–27.5	–28.4	–29.1	PLCC-25.4-13.1-UV
–40.0	19.1	–2.5	-41.3	2.0	4.3	20.6	–41.2	–43.3	–44.7	–45.8	PLCC-19.1-20.6-UV
–40.0	25.4	–1.9	–41.4	2.0	6.7	19.6	–39.2	–41.2	–42.5	–43.6	PLCC-25.4-19.6-UV
–50.0	12.7	–4.6	–51.3	2.0	2.8	25.8	–51.6	–54.2	–56.0	–57.4	PLCC-12.7-25.8-UV
–50.0	15.0	–3.9	–51.4	2.0	3.1	25.8	–51.6	–54.2	–56.0	–57.4	PLCC-15.0-25.8-UV
–50.0	25.4	–2.3	–52.1	3.0	6.3	25.8	–56.1	–54.2	–56.0	–57.4	PLCC-25.4-25.8-UV
–75.0	15.0	–5.9	–76.3	2.0	2.7	38.6	–77.2	–81.1	–83.8	–85.8	PLCC-15.0-38.6-UV
–75.0	25.4	–3.5	–76.4	2.0	4.1	38.6	–77.2	–81.1	–83.8	–85.8	PLCC-25.4-38.6-UV
–100.0	15.0	–7.8	–101.4	2.0	2.5	51.5	–103.1	–108.2	–111.8	–114.5	PLCC-15.0-51.5-UV
–100.0	25.4	–4.6	–101.4	2.0	3.6	51.5	–103.1	–108.2	–111.8	–114.5	PLCC-25.4-51.5-UV
–100.0	50.8	–2.3	–101.3	2.0	8.7	51.5	–103.1	–108.2	–111.8	–114.5	PLCC-50.8-51.5-UV
–125.0	15.0	–9.8	–126.4	2.0	2.4	64.4	–128.9	–135.3	–139.8	–143.2	PLCC-15.0-64.4-UV
–125.0	25.4	–5.8	–126.4	2.0	3.3	64.4	–128.9	–135.3	–139.8	–143.2	PLCC-25.4-64.4-UV
–150.0	15.0	–11.8	–151.5	2.3	2.7	77.3	–154.7	–162.4	–167.8	–171.9	PLCC-15.0-77.3-UV
–150.0	25.4	–6.9.	–152.1	3.1	4.2	77.3	–154.7	–162.4	–167.8	–171.9	PLCC-25.4-77.3-UV
–150.0	50.8	–3.5.	–153.1	4.5	8.8	77.3	–154.7	–162.4	–167.8	–171.9	PLCC-50.8-77.3-UV
–200.0	25.4	–9.3.	–202.3	3.4	4.2	103.0	–206.1	–216.4	–223.6	–229.1	PLCC-25.4-103.0-UV
–200.0	50.8	–4.6.	–203.3	4.8	8.0	103.0	–206.1	–216.4	–223.6	–229.1	PLCC-50.8-103.0-UV
–250.0	25.4	–11.6.	–252.5	3.6	4.2	128.8	–257.8	–270.3	–279.6	–286.5	PLCC-25.4-128.8-UV
–250.0	50.8	45.8	–253.8	5.5	8.0	128.8	–257.8	–270.3	–279.6	–286.5	PLCC-50.8-128.8-UV
–300.0	25.4	413.9	–301.4	2.0	2.5	154.5	–309.2	–324.5	–335.4	–343.6	PLCC-25.4-154.5-UV
–300.0	50.8	46.9	–304.3	6.2	8.3	154.5	–309.2	–324.5	–335.4	–343.6	PLCC-50.8-154.5-UV
–350.0	25.4	416.2	–351.4	2.0	2.4	180.3	–360.8	–378.7	–391.3	–401.0	PLCC-25.4-180.3-UV
–350.0	50.8	48.1	–354.3	6.2	8.0	180.3	–360.8	–378.7	–391.3	–401.0	PLCC-50.8-180.3-UV
–400.0	25.4	–18.5	–401.4	2.0	2.4	206.6	–413.5	–434.0	–448.4	–459.5	PLCC-25.4-206.6-UV
–500.0	25.4	–23.2	–503.0	4.3	4.6	257.5	–515.3	–540.9	–558.9	–572.7	PLCC-25.4-257.5-UV
–500.0	50.8	–11.6	–504.8	7.0	8.3	257.5	–515.3	–540.9	–558.9	–572.7	PLCC-50.8-257.5-UV
–600.0	25.4	–27.8	–602.7	3.9	4.2	309.1	–618.6	–649.3	–670.9	–687.5	PLCC-25.4-309.1-UV
–1000.0	25.4	–46.3	–1001.4	2.0	2.2	515.1	–1030.9	–1082.0	–1118.1	–1145.6	PLCC-25.4-515.1-UV
–1000.0	50.8	–23.2	–1004.3	6.4	7.0	515.1	-1030.9	–1082.0	–1118.1	–1145.6	PLCC-50.8-515.1-UV
–1500.0	25.4	–69.5	–1501.4	2.0	2.1	772.6	–1546.2	–1622.9	–1677.0	–1718.3	PLCC-25.4-772.6-UV
–1500.0	50.8	–34.7	–1504.2	6.4	6.8	772.6	–1546.2	–1622.9	–1677.0	–1718.3	PLCC-50.8-772.6-UV

IDEX OPTICS & PHOTONICS MARKETPLACE

CVI Laser Optics

N-SF11 PLANO-CONCAVE LENSES

- Diverging lens for beam expansion
- High refractive index material providing more optical power with less curvature
- λ/10 surface figure, 20-10 surface quality
- Low-loss high-energy AR coatings

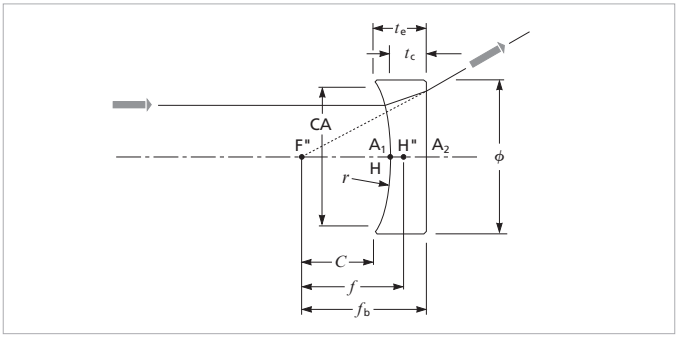

Laser quality plano-concave lens

Specifications

Product Code: PLCC-SF11

Optical Material: N-SF11 glass

Surface Figure: λ/10 p-v at 633 nm before coating

Surface Quality: 20-10 scratch and dig

Diameter: Ø+0/–0.25 mm

Center Thickness: t_c±0.25 mm

Chamfer: 0.35 mm at 45° typical

Concentricity: ≤ 0.05 mm

Paraxial Focal Length: *f* ±0.5% typical

Antireflection Coating: Wavelength user specified-
Narrowband: R ≤ 0.25% per surface
Broadband: R_{avg} ≤ 0.75% per surface

Clear Aperture (CA): ≥ 85% of central diameter

Damage Threshold: 4 J/cm², 20 nsec, 20 Hz @ 1064 nm

Semi Custom

Add a coating to a Standard Uncoated Product

YOUR CUSTOM PART NUMBER	PLCC-10.0-7.7-SF11	—	1064

WAVELENGTH OF AR COATING (nm); for uncoated leave blank

425-675	633	800	1050-1600	1064	1550
532	633-1064	1030	1053	1064/532	

Standard Uncoated Products

f (mm)	Ø (mm)	f/#	f_b (mm)	t_c (mm)	t_e (mm)	r (mm)	*f*@ 780 nm	*f*@ 800 nm	*f*@ 1300 nm	*f*@ 1550 nm	PART NUMBER
N-SF11 Plano-Concave Lenses											
–10.0	10.0	–1.2	–11.1	2.0	3.8	7.7	–9.9	–10.1	–10.3	–10.3	PLCC-10.0-7.7-SF11
–15.0	10.0	–1.8	–16.1	2.0	3.1	11.5	–14.8	–15.0	–15.4	–15.4	PLCC-10.0-11.5-SF11
–100.0	25.4	–4.6	–101.1	2.0	3.1	76.3	–98.5	–99.8	–101.9	–102.5	PLCC-25.4-76.3-SF11
–150.0	25.4	–6.9	–151.1	2.0	2.7	114.6	–148.0	–149.9	–153.0	–153.9	PLCC-25.4-114.6-SF11

CVI Laser Optics

STANDARD N-BK7 BI-CONCAVE LENSES

Bi-Concave or symmetric-concave lenses have a negative focal length and two concave surfaces with identical radii. Bi-concave lenses can be found in laser beam expanders, optical character readers, viewers, and projection systems.

These standard quality equi-concave lenses are made from N-BK7 and exhibit excellent transmissive properties from below 400 nm to above 1 µm. They can be used in a wide range of applications except for high power lasers or when high wavefront quality is required.

- Bi-concave lenses diverge collimated incident light
- They form virtual images which can be seen through the lens
- Other dimensions and focal lengths are available for OEM applications. Contact CVI Laser Optics for pricing and delivery.

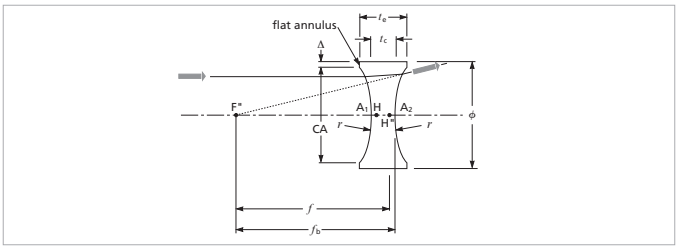

Standard bi-concave lens

Specifications

Product Code: LDK-C

Optical Material: N-BK7

Clear Aperture (CA): Ø–2Δ

Surface Quality: 60-40 scratch and dig

Diameter: Ø+0/–0.1 mm

Center Thickness: t_c±0.2 mm

Chamfer: 0.05–0.20 mm at 45°

Flat Annulus Width (Δ): 0.2 mm for Ø≤40 mm; 0.4 mm for Ø>40 mm (+0/-70%)

Centration: ≤ 3 arc minutes

Paraxial Focal Length: *f*±2%

Design Wavelength: 546.1 nm

Antireflection Coating: Wavelength user specified

Standard Uncoated Products

f (mm)	Ø (mm)	f/#	f_b (mm)	t_c (mm)	t_e (mm)	r (mm)	PART NUMBER
Standard N-BK7 Bi-Concave Lenses							
–5.0	5.0	–1.1	–5.6	2.0	3.0	5.5	LDK-5.0-5.5-C
–8.0	6.0	–1.4	–8.6	2.0	2.9	8.6	LDK-6.0-8.6-C
–12.0	12.0	–1.0	–12.6	2.0	4.8	12.8	LDK-12.0-12.8-C
–15.0	12.5	–1.2	–15.7	2.0	4.4	15.9	LDK-12.5-15.9-C
–25.0	25.0	–1.0	–25.7	2.0	8.1	26.3	LDK-25.0-26.3-C
–30.0	20.0	–1.5	–30.7	2.0	5.1	31.5	LDK-20.0-31.5-C
–50.0	42.0	–1.3	–50.7	2.0	10.5	52.2	LDK-42.0-52.2-C

Semi Custom Use the selection menu below to add a coating to a Standard Uncoated Product

YOUR CUSTOM PART NUMBER LDK-12.0-12.8-C — 415-700

WAVELENGTH OF AR COATING (nm); for uncoated leave blank

415-700	**633-1064**

IDEX OPTICS & PHOTONICS MARKETPLACE

LASER QUALITY N-BK7 BI-CONCAVE LENSES

Spherical biconcave lenses are equiconcave: r1 = r2. Other dimensions and focal lengths are available for OEM applications. Contact CVI Laser Optics for pricing and delivery.

- Laser quality: λ/10 surface figure, 10-5 surface quality
- High energy, single wavelength and broadband AR coatings

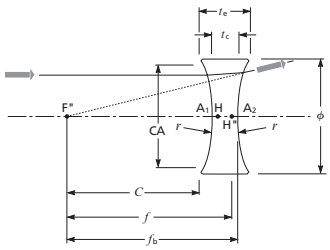

Laser quality bi-concave lens

Specifications

Product Code: BICC-C

Optical Material: N-BK7

Surface Figure: λ/10 p-v at 633 nm before coating

Surface Quality: 10-5 scratch and dig

Diameter: Ø+0/–0.25 mm

Center Thickness: t_c±0.25 mm

Chamfer: 0.35 mm at 45° typical

Concentricity: ≤ 0.05 mm

Paraxial Focal Length: *f* ±0.5% typical

Antireflection Coating: Wavelength user specified
Narrowband: R ≤ 0.25% per surface
Broadband: R_{avg} ≤ 0.5% per surface

Clear Aperture (CA): ≥ 85% of central diameter

Damage Threshold:
Pulsed, Narrowband: 15 J/cm², 20 nsec, 20 Hz @ 1064 nm
Pulsed, Broadband: 10 J/cm², 20 nsec, 20 Hz @ 1064 nm
cw: 1 MW/cm² @ 1064 nm

Semi Custom

Use the selection menu below to build your own part

YOUR CUSTOM PART NUMBER	BICC-25.4-103.4-C	—	633

WAVELENGTH OF AR COATING (nm); for uncoated leave blank

415-700	633-1064	808	1053	1550
532	780	1030	1064	
633	800	1050-1600	1064/532	

Standard Uncoated Products

f (mm)	Ø (mm)	f/#	f_b (mm)	t_c (mm)	t_e (mm)	r (mm)	*f*@ 532 nm	*f*@ 633 nm	*f*@ 1064 nm	*f*@ 1319 nm	PART NUMBER
Laser Quality N-BK7 Bi-Concave Lenses											
–5.0	5.0	–1.2	–5.7	2.0	3.2	5.5	–5.0	–5.0	–5.1	–5.1	BICC-5.0-5.5-C
–10.0	12.7	–0.9	–10.7	2.0	6.1	10.8	–10.1	–10.2	–10.3	–10.4	BICC-12.7-10.8-C
–12.0	12.0	–1.2	–12.7	2.0	5.0	12.7	–11.9	–12.0	–12.2	–12.3	BICC-12.0-12.7-C
–20.0	20.0	–1.2	–20.5	1.0	6.1	20.9	–20.0	–20.1	–20.5	–20.4	BICC-20.0-20.9-C
–25.0	25.0	–1.2	–25.7	2.1	8.4	26.4	–25.1	–25.3	–25.7	–25.9	BICC-25.0-26.4-C
–100.0	25.4	–4.6	–100.9	2.6	4.2	103.4	–99.1	–99.9	–101.6	–102.3	BICC-25.4-103.4-C
–150.0	25.4	–6.9	–151.1	3.2	4.2	154.9	–148.6	–149.8	–152.3	–153.3	BICC-25.4-154.9-C

CVI Laser Optics

LASER QUALITY FUSED SILICA BI-CONCAVE LENSES

Spherical biconcave lenses are equiconcave: r1 = r2. Other dimensions and focal lengths are available for OEM applications.

- UV-grade fused-silica equiconcave singlet lenses
- Laser quality: λ/10 surface figure, 10-5 surface quality
- High-energy, single-wavelength and broadband AR coatings

Specifications

Product Code: BICC-UV
Optical Material: UV-grade fused silica
Surface Figure: λ/10 p-v at 633 nm before coating
Surface Quality: 10-5 scratch and dig
Diameter: Ø+0/–0.25 mm
Center Thickness: t_c±0.25 mm
Chamfer: 0.35 mm at 45° typical
Concentricity: ≤ 0.05 mm
Paraxial Focal Length: *f* ±0.5% typical
Antireflection Coating: Wavelength user specified
Narrowband: R ≤ 0.25% per surface
Broadband: R_{avg} ≤ 0.5% per surface
Clear Aperture (CA): ≥ 85% of central diameter
Damage Threshold:
Pulsed, Narrowband: 15 J/cm², 20 nsec, 20 Hz @ 1064 nm
Pulsed, Broadband: 10 J/cm², 20 nsec, 20 Hz @ 1064 nm
cw: 1 MW/cm² @ 1064 nm

Semi Custom

Add a coating to a Standard Uncoated Product

YOUR CUSTOM PART NUMBER	BICC-25.4-206.4-UV	—	248

WAVELENGTH OF AR COATING (nm); for uncoated leave blank

193	355	415-700	700-900	1030	1064/532
248	355-532	532	780	1050-1600	1550
248-355	400	633	800	1053	
266	405	633-1064	808	1064	

Standard Uncoated Products

f (mm)	Ø (mm)	f/#	f_b (mm)	t_c (mm)	t_e (mm)	r (mm)	*f*@ 266 nm	*f*@ 355 nm	*f*@ 532 nm	*f*@ 1064 nm	PART NUMBER
Laser Quality Fused Silica Bi-Concave Lenses											
–20.0	19.1	–1.2	–20.7	2.0	6.6	20.9	–20.6	–21.6	–22.3	–22.9	BICC-19.1-20.9-UV
–25.0	25.4	–1.2	–25.7	2.0	8.6	26.1	–25.8	–27.1	–28.0	–28.7	BICC-25.4-26.1-UV
–50.0	25.4	–2.3	–50.7	2.0	5.2	51.8	–51.5	–54.1	–55.9	–57.3	BICC-25.4-51.8-UV
–50.0	50.0	–1.2	–50.7	2.0	14.9	51.8	–51.5	–54.1	–55.9	–57.3	BICC-50.0-51.8-UV
–75.0	25.4	–3.5	–75.7	2.0	4.1	77.6	–76.7	–81.2	–83.2	–85.9	BICC-25.4-77.6-UV
–100.0	25.4	–4.6	–100.9	2.6	4.2	103.4	–103.0	–108.1	–111.8	–114.5	BICC-25.4-103.4-UV
–150.0	25.4	–6.9	–151.1	3.2	4.2	154.9	–154.5	–162.1	–167.6	–171.7	BICC-25.4-154.9-UV
–150.0	50.8	–3.5	–150.7	2.0	6.2	154.9	–154.5	–162.7	–167.8	–172.3	BICC-50.8-154.9-UV
–200.0	25.4	–9.3	–200.7	2.0	2.8	206.4	–206.2	–216.4	–223.7	–229.2	BICC-25.4-206.4-UV

IDEX OPTICS & PHOTONICS MARKETPLACE

CVI Laser Optics

POSITIVE BESTFORM LENSES

Bestform lenses are bi-convex lenses designed and manufactured to minimize coma and spherical aberrations. Positive bestform lenses are of exceptional performance and provide the smallest spot size available in a singlet lens.

- Smallest spot size available in a singlet lens
- Low-loss, high-damage-threshold AR coatings

Specifications

Product Code: BFPL-C • BFPL-UV
Optical Material: UV-grade fused silica or N-BK7
Surface Figure: λ/10 p-v at 633 nm before coating
Surface Quality: 10-5 scratch and dig
Diameter: Ø+0/–0.25 mm
Center Thickness: t_c±0.25 mm
Chamfer: 0.35 mm at 45° typical
Concentricity: ≤ 0.05 mm
Paraxial Focal Length: *f*±0.5% typical
Antireflection Coating: Wavelength user specified
Narrowband: R ≤ 0.25% per surface
Broadband: R_{avg} ≤ 0.5% per surface
Clear Aperture (CA): ≥ 85% of central diameter
Damage Threshold:
Pulsed, Narrowband: 15 J/cm², 20 nsec, 20 Hz @ 1064 nm
Pulsed, Broadband: 10 J/cm², 20 nsec, 20 Hz @ 1064 nm
cw: 1 MW/cm² @ 1064 nm

Semi Custom

Add a coating to a Standard Uncoated Product

YOUR CUSTOM PART NUMBER	BFPL-25.4-75.0-UV	—	355

WAVELENGTH OF AR COATING (nm); for uncoated leave blank

193	355 - 532	633	808	1064/532
248	400	633-1064	1030	1550
248-355	405	700-900	1050-1600	
266	415-700	780	1053	
355	532	800	1064	

Standard Uncoated Products

f (mm)	Ø (mm)	*f* @ 532 nm	*f* @ 633 nm	*f* @ 1064 nm	*f* @ 1319 nm	Input Diameter (mm)	Spot Size (µm)	t_c (mm)	t_e (mm)	PART NUMBER
N-BK7 Positive Bestform Lenses										
50.0	25.4	50.2	50.7	51.5	51.8	7.0	8.5	4.0	0.8	BFPL-25.4-50.0-C
75.0	25.4	74.1	74.7	76.0	76.5	10.0	11.5	4.0	1.9	BFPL-25.4-75.0-C
100.0	25.4	100.8	101.6	103.3	104.0	12.0	10.8	4.0	2.4	BFPL-25.4-100.0-C
125.0	25.4	123.6	124.7	126.8	127.6	14.5	12.6	4.0	2.7	BFPL-25.4-125.0-C
150.0	25.4	147.2	148.5	151.0	151.9	16.5	13.1	4.0	2.9	BFPL-25.4-150.0-C
200.0	25.4	198.3	200.0	203.4	204.6	20.5	13.8	4.0	3.2	BFPL-25.4-200.0-C
Fused Silica Positive Bestform Lenses										
25.0	12.7	25.4	26.6	27.5	28.2	3.0	2.9	4.0	2.3	BFPL-12.7-25.0-UV
50.0	25.4	52.2	54.8	56.6	58.0	5.5	4.2	4.0	0.8	BFPL-25.4-50.0-UV
75.0	25.4	77.0	80.8	83.5	85.6	7.5	4.9	4.0	1.9	BFPL-25.4-75.0-UV
100.0	25.4	104.8	110.0	113.6	116.4	9.5	5.3	4.0	2.4	BFPL-25.4-100.0-UV
125.0	25.4	128.5	134.9	139.4	142.8	11.5	6.3	4.0	2.7	BFPL-25.4-125.0-UV
150.0	25.4	153.0	160.6	166.0	170.1	13.0	6.4	4.0	2.9	BFPL-25.4-150.0-UV
200.0	25.4	206.2	216.4	223.6	229.1	16.0	6.6	4.0	3.2	BFPL-25.4-200.0-UV

Specifications

Product Code: LAG-C

Optical Material: Optical crown glass

Paraxial Focal Length: f ±7%

Center Thickness: t_c ±7% down to ±0.5 mm

Diameter: Ø±0.4 mm

Surface Quality: Aspheric side precision molded, 80-50 scratch and dig. Flat or spherical side felt polished, 80-50 scratch and dig

Maximum Service Temperature: 177°C (350°F)

Antireflection Coating: Optional Single-layer MgF_2 (400-700 nm)

ASPHERIC GLASS CONDENSER LENSES

Aspheric lenses provide better performance by reducing aberrations when used in low f-number, high-throughput applications. These lenses have one aspheric surface. The second surface is flat, or spherical-convex.

- A flat second surface minimizes aberration.
- A spherical-convex second surface provides the lowest f-number and highest transmission because equal deviation of marginal rays is most closely approached.
- Only single-layer MgF_2 (SLMF-400-700) coatings are recommended for these lenses owing to the steep curvature of the surface.

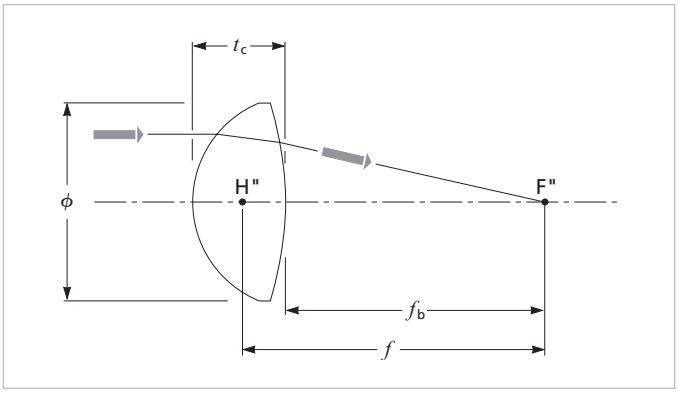

Aspheric glass condenser lenses

Semi Custom

Add a coating to a Standard Uncoated Product

YOUR CUSTOM PART NUMBER	LAG-18.0-12.0-C	—	SLMF-400-700

WAVELENGTH OF AR COATING (nm); for uncoated leave blank

SLMF-400-700

Standard Uncoated Products

f (mm)	Ø (mm)	f/#	NAS Shape*	t_c (mm)	f_b (mm)	PART NUMBER
Aspheric Glass Condenser Lenses						
8.5	12.0	0.71	CX	5.5	5.8	LAG-12.0-8.5-C
12.0	15.0	0.80	P	5.5	8.4	LAG-15.0-12.0-C
12.0	17.0	0.71	P	8.0	6.7	LAG-17.0-12.0-C
12.0	18.0	0.67	CX	8.8	6.9	LAG-18.0-12.0-C
15.5	18.0	0.86	P	7.0	10.9	LAG-18.0-15.5-C
17.0	19.0	0.89	P	7.0	12.4	LAG-19.0-17.0-C
18.0	24.0	0.75	P	10.0	11.4	LAG-24.0-18.0-C
23.5	32.5	0.72	CX	13.5	15.1	LAG-32.5-23.5-C
25.0	32.5	0.77	P	13.0	16.5	LAG-32.5-25.0-C
26.5	30.0	0.88	P	11.0	19.3	LAG-30.0-26.5-C
29.5	40.0	0.74	CX	15.5	20.9	LAG-40.0-29.5-C
34.5	38.0	0.91	P	12.0	26.6	LAG-38.0-34.5-C
35.0	35.0	1.00	P	11.5	27.4	LAG-35.0-35.0-C
39.0	60.0	0.65	CX	27.5	25.0	LAG-60.0-39.0-C
50.0	75.0	0.67	P	29.1	31.2	LAG-75.0-50.0-C
53.0	65.0	0.82	P	23.5	37.6	LAG-65.0-53.0-C

*Shape of non aspheric side (NAS) is plano (P), or convex (CX)

Single vs Multilayer Coatings

While MgF_2 does not offer the same performance as multilayer coatings, there are special circumstances where it is preferred. On lenses with very steep surfaces, such as our LAG series aspherics, MgF_2 will actually perform better near the edge of the lens. This is because the performance of a coating shifts with angle of incidence; the shifted MgF_2 will never be worse than an uncoated lens, but at very high angles, a multilayer coating can actually be shifted to a region where its performance is worse than if there were no coating at all.

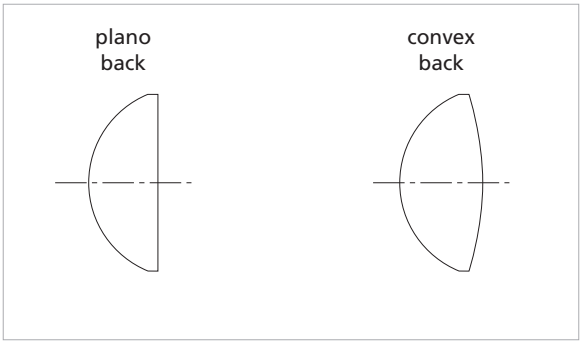

Cross-sectional views of the two standard types of aspheric lenses

APPLICATION NOTE

Aspheric Glass Condenser Lenses

The aspheric lens is designed to have a much shorter focal length than can be attained with a spherical glass lens of equal diameter and spherical aberration. These lenses have only one aspheric surface; the other surface is either plano, or spherical convex. A correctly formed aspheric lens surface cancels spherical aberration, or it reduces both spherical aberration and coma to insignificance, in which case the system is said to be aplanatic. Thus, more energy can be concentrated into a smaller area, such as the entrance pupil of a projection lens system or the sensitive area of a detector. Without the aspheric surface, marginal rays (which enter or exit the lens near its edge) may be severely aberrated and fail to illuminate the desired target. The aspheric surface puts marginal rays on target and allows the potential collecting area of the system to be fully utilized at f-numbers as low as 0.65.

Aspheric lenses are ideal for low f-number, high throughput applications, particularly where elements are adjacent to the light source, as in condensing, projecting, and illuminating systems. Other applications include optical communications equipment; smoke, fire (turbulence), and intrusion alarms; pollution monitors; and chemical vapor alarms. They should be considered whenever highly efficient use of either sources or detectors is important, or whenever space is limited and short focal lengths or low f-numbers are advantageous. The schematic drawing of a typical projection system shows an aspheric lens used in combination with a plano-convex spherical lens. The aspheric surface faces the long conjugate (in this case, away from the source), making ray deviations at two surfaces nearly equal. This minimizes reflection loss. For this orientation, the aspheric surface contour minimizes the aberration of combined aspheric and plano-convex lenses, concentrating maximum power into the projection lens entrance pupil. Lens combination conjugate ratios can be adjusted, with aberration minimized, by changing the focal length of the spherical plano-convex element. For ratios near unity, the planoconvex lens should be replaced by a second aspheric element, oriented so that the aspheric surfaces face each other. For ratios much less than unity, the position of the aspheric and plano lenses should be interchanged.

Aspheric lenses are used in lens combinations, as shown, or alone at large or infinite conjugate ratio, for example, in a radiometer detector or in a narrow-beam spot lamp. Where sharp focus is required, plano aspherics, alone or in combination, are especially effective because they form extremely small focal spots and sharp axial imagery, even at full aperture.

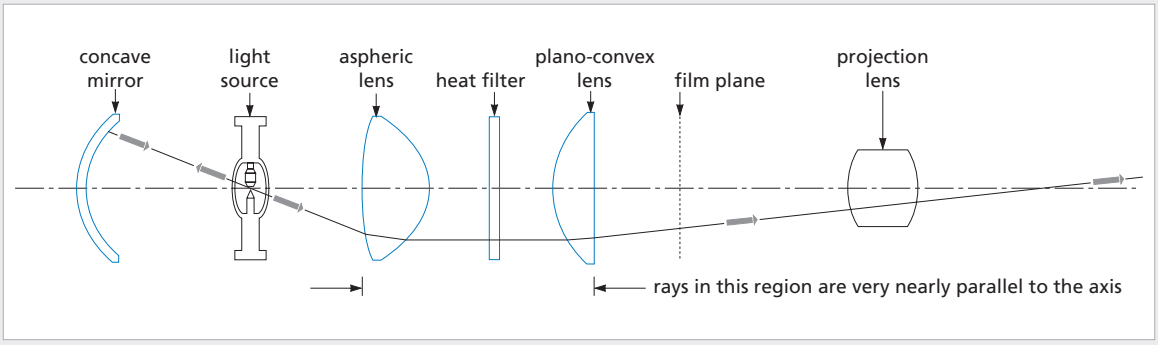

Aspheric lens used in a projection system. Both lenses and the filter in the condenser are sometimes antireflection coated.

IDEX OPTICS & PHOTONICS MARKETPLACE

CYLINDRICAL LENSES

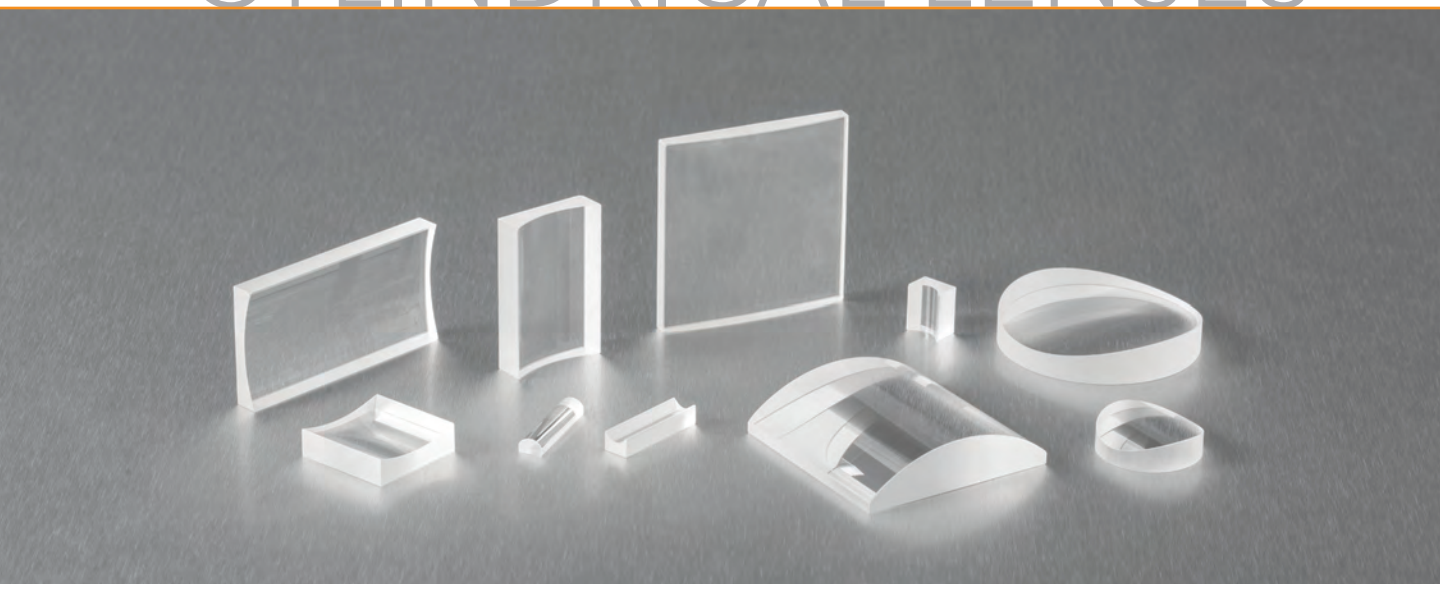

Cylindrical lenses are used to condense, focus or expand light in a single dimension. Typical applications include laser scanners, holography, optical information processing/computing, spectroscopy, dye lasers, and scanning confocal microscopy. CVI Laser Optics' cylindrical lenses are manufactured with precision and are quality-controlled to deliver guaranteed performance in a wide array of industrial, OEM, and research applications, even at high laser power.

Please see Pg. IV for the Semi Custom Selection Guide.

SELECTION GUIDE 64

PLANO-CONVEX RECTANGULAR LENSES 65

PLANO-CONVEX SQUARE LENSES 70

PLANO-CONVEX ROUND LENSES 74

PLANO-CONCAVE RECTANGULAR LENSES 76

PLANO-CONCAVE SQUARE LENSES 80

PLANO-CONCAVE ROUND LENSES 84

SELECTION GUIDE

Product Type	Surface Quality	Wavelength Range	Operating Conditions	Page
Plano-Convex Cylindrical Lenses				
STANDARD N-BK7 RECTANGULAR	60-40	380 – 2100 nm	Medium Energy Lasers	65
PRECISION N-BK7 RECTANGULAR	20-10	380 – 2100 nm	High Energy Lasers, 10 J/cm^2, 20 nsec, 20 Hz at 1064 nm	66
PRECISION FUSED SILICA RECTANGULAR	20-10	193 – 2100 nm	High Energy Lasers, 10 J/cm^2, 20 nsec, 20 Hz at 1064 nm	68
PRECISION N-BK7 SQUARE	20-10	380 – 2100 nm	High Energy Lasers, 10 J/cm^2, 20 nsec, 20 Hz at 1064 nm	70
PRECISION FUSED SILICA SQUARE	20-10	193 – 2100 nm	High Energy Lasers, 10 J/cm^2, 20 nsec, 20 Hz at 1064 nm	72
PRECISION N-BK7 ROUND	20-10	380 – 2100 nm	High Energy Lasers, 10 J/cm^2, 20 nsec, 20 Hz at 1064 nm	74
PRECISION FUSED SILICA ROUND	20-10	193 – 2100 nm	High Energy Lasers, 10 J/cm^2, 20 nsec, 20 Hz at 1064 nm	75
Plano-Concave Cylindrical Lenses				
STANDARD N-BK7 RECTANGULAR	60-40	380 – 2100 nm	Medium Energy Lasers	76
PRECISION N-BK7 RECTANGULAR	20-10	380 – 2100 nm	High Energy Lasers, 10 J/cm^2, 20 nsec, 20 Hz at 1064 nm	77
PRECISION FUSED SILICA RECTANGULAR	20-10	193 – 2100 nm	High Energy Lasers, 10 J/cm^2, 20 nsec, 20 Hz at 1064 nm	78
PRECISION N-BK7 SQUARE	20-10	380 – 2100 nm	High Energy Lasers, 10 J/cm^2, 20 nsec, 20 Hz at 1064 nm	80
PRECISION FUSED SILICA SQUARE	20-10	193 – 2100 nm	High Energy Lasers, 10 J/cm^2, 20 nsec, 20 Hz at 1064 nm	82
PRECISION N-BK7 ROUND	20-10	380 – 2100 nm	High Energy Lasers, 10 J/cm^2, 20 nsec, 20 Hz at 1064 nm	84
PRECISION FUSED SILICA ROUND	20-10	193 – 2100 nm	High Energy Lasers, 10 J/cm^2, 20 nsec, 20 Hz at 1064 nm	85

IDEX OPTICS & PHOTONICS MARKETPLACE

CVI Laser Optics

STANDARD N-BK7 RECTANGULAR CYLINDRICAL PLANO-CONVEX LENSES

Plano-convex cylindrical lenses are positive lenses. They are typically used either to focus incoming light to a line or to change the dimensions of an image in a single direction. Our standard-grade lenses are manufactured from N-BK7 glass.

Specifications

Product Code: LCP-C

Optical Material: N-BK7

Clear Aperture (CA): ≥ 90% of central dimension

Surface Quality: 60-40 scratch and dig

Dimensional Tolerance: ±0.6 mm

Center Thickness: t_c ±0.6 mm

Chamfer: Slight protective bevel

Wedge ($\Delta t_c/x$): ≤ 8 mrad

Paraxial Focal Length: f ±2%

Design Wavelength: 587.6 nm

Antireflection Coating: Wavelength user specified

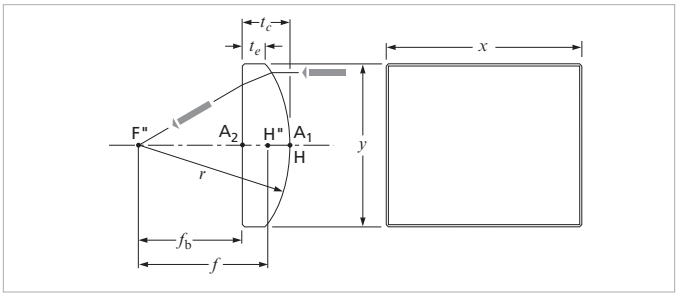

Rectangular cylindrical plano-convex lens

Semi Custom

Add a coating to a Standard Uncoated Product

YOUR CUSTOM PART NUMBER	LCP-25.0-19.0-9.8-C	—	415-700

WAVELENGTH OF AR COATING (nm); for uncoated leave blank

415-700	633-1064

Standard Uncoated Products

f (mm)	x (mm)	y (mm)	r (mm)	t_c (mm)	t_e (mm)	f/#	f_b (mm)	PART NUMBER
Standard N-BK7 Rectangular Cylindrical Plano-Convex Lenses								
6.4	25.0	6.0	3.3	3.5	1.6	1.2	4.0	LCP-25.0-6.0-3.3-C
12.7	25.0	12.0	6.6	5.0	1.1	1.2	9.4	LCP-25.0-12.0-6.6-C
19.0	25.0	19.0	9.8	8.5	1.2	1.1	13.4	LCP-25.0-19.0-9.8-C
25.4	60.0	22.0	13.1	7.0	1.0	1.3	20.8	LCP-60.0-22.0-13.1-C
40.0	60.0	15.0	20.7	2.7	1.3	3.0	38.2	LCP-60.0-15.0-20.7-C
40.0	130.0	15.0	20.7	2.7	1.3	3.0	38.2	LCP-130.0-15.0-20.7-C
60.0	60.0	20.0	31.0	3.0	1.3	3.3	58.0	LCP-60.0-20.0-31.0-C
60.0	130.0	20.0	31.0	3.0	1.3	3.3	58.0	LCP-130.0-20.0-31.0-C
80.0	60.0	30.0	41.3	4.0	1.2	3.0	77.4	LCP-60.0-30.0-41.3-C
100.0	60.0	50.0	51.7	8.0	1.6	2.2	94.7	LCP-60.0-50.0-51.7-C
200.0	60.0	50.0	103.4	5.0	1.9	4.4	196.7	LCP-60.0-50.0-103.4-C
300.0	60.0	50.0	155.0	4.0	2.0	6.7	297.4	LCP-60.0-50.0-155.0-C

CVI Laser Optics

PRECISION N-BK7 RECTANGULAR CYLINDRICAL PLANO-CONVEX LENSES

These precision cylindrical lenses meet much more stringent specifications than the preceding standard-grade LCP lenses. They offer high surface quality for demanding applications, and are available with a large variety of high energy single wavelength and broadband AR coatings.

Other focal lengths and dimensions are available. Contact us for pricing and delivery details.

- Anamorphic beam shaping and laser projection
- Illumination of detector arrays
- Low loss, high energy AR coatings

Specifications

Product Code: RCX-C

Optical Material: N-BK7

Surface Figure (p-v at 633 nm before coating):
Cylindrical side: λ (y-axis), λ/cm flatness (x-axis)
Plano side: λ/4 flatness

Surface Quality: 20-10 scratch and dig

Dimensional Tolerance: +0/–0.25 mm

Center Thickness: t_c ±0.25 mm

Chamfer: 0.35 mm at 45° typical

Wedge: ≤ 3 arc minutes

Paraxial Focal Length: f ±0.5% typical

Antireflection Coating: Wavelength user specified
Narrowband: R ≤ 0.25% per surface
Broadband: R_{avg} ≤ 0.5% per surface

Clear Aperture (CA): ≥ 85% of central dimension

Damage Threshold: 10 J/cm², 20 nsec, 20 Hz @ 1064 nm

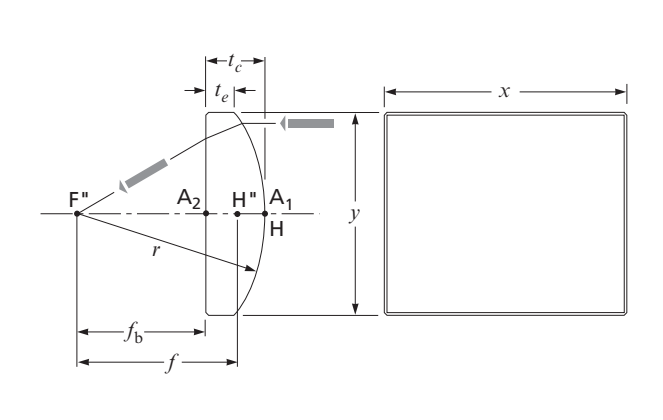

Rectangular cylindrical plano-convex lens

IDEX OPTICS & PHOTONICS MARKETPLACE

Standard Uncoated Products

f (mm)	x (mm)	y (mm)	r (mm)	t_c (mm)	t_e (mm)	f/#	f_b (mm)	PART NUMBER
Precision N-BK7 Rectangular Cylindrical Plano-Convex Lenses								
6.0	12.7	4.8	3.1	4.0	2.8	1.5	3.4	RCX-12.7-4.8-3.1-C
10.0	12.7	6.4	5.1	4.0	2.9	1.8	7.4	RCX-12.7-6.4-5.1-C
12.7	12.7	6.4	6.5	3.0	2.2	2.3	10.7	RCX-12.7-6.4-6.5-C
20.0	12.7	6.4	10.2	3.0	2.5	3.7	18.0	RCX-12.7-6.4-10.2-C
25.0	25.4	12.7	12.7	5.0	3.3	2.3	21.7	RCX-25.4-12.7-12.7-C
30.0	25.0	15.0	15.3	5.0	3.0	2.4	26.7	RCX-25.0-15.0-15.3-C
40.0	40.0	20.0	20.3	6.0	3.4	2.4	36.0	RCX-40.0-20.0-20.3-C
50.0	30.0	20.0	25.4	6.0	3.9	2.9	46.0	RCX-30.0-20.0-25.4-C
75.0	30.0	20.0	38.1	5.0	3.7	4.4	71.7	RCX-30.0-20.0-38.1-C
100.0	30.0	20.0	50.9	5.0	4.0	5.9	96.7	RCX-30.0-20.0-50.9-C
200.0	40.0	25.4	101.7	5.0	4.2	9.3	196.7	RCX-40.0-25.4-101.7-C
300.0	40.0	25.4	152.6	5.0	4.5	13.9	296.7	RCX-40.0-25.4-152.6-C
500.0	40.0	25.4	254.3	5.0	4.7	23.2	496.7	RCX-40.0-25.4-254.3-C
1000.0	40.0	30.0	508.6	5.0	4.8	39.2	996.7	RCX-40.0-30.0-508.6-C

Semi Custom Use the selection menu below to add a coating to a Standard Uncoated Product

YOUR CUSTOM PART NUMBER **RCX-40.0-20.0-20.3-C — 532**

WAVELENGTH OF AR COATING (nm); for uncoated leave blank

415 - 700	**633 - 1064**	**808**	**1053**	**1550**
532	**780**	**1030**	**1064**	
633	**800**	**1050 - 1600**	**1064/532**	

CVI Laser Optics

PRECISION FUSED SILICA RECTANGULAR CYLINDRICAL PLANO-CONVEX LENSES

Other focal lengths and dimensions available. Contact us for pricing and delivery details.

- UV laser-line focusing
- Anamorphic beam shaping and laser projection
- Illumination of detector arrays
- Low loss, high energy AR coatings

Specifications

Product Code: RCX-UV

Optical Material: UV-grade fused silica

Surface Figure (p-v at 633 nm before coating):
Cylindrical side: λ (y-axis), λ/cm flatness (x-axis)
Plano side: λ/4 flatness

Surface Quality: 20-10 scratch and dig

Dimensional Tolerance: +0/–0.25 mm

Center Thickness: t_c ±0.25 mm

Chamfer: 0.35 mm at 45° typical

Wedge: ≤ 3 arc minutes

Paraxial Focal Length: f ±0.5% typical

Antireflection Coating: Wavelength user specified
Narrowband: R ≤ 0.25% per surface
Broadband: R_{avg} ≤ 0.5% per surface

Clear Aperture (CA): ≥ 85% of central dimension

Damage Threshold: 10 J/cm², 20 nsec, 20 Hz @ 1064 nm

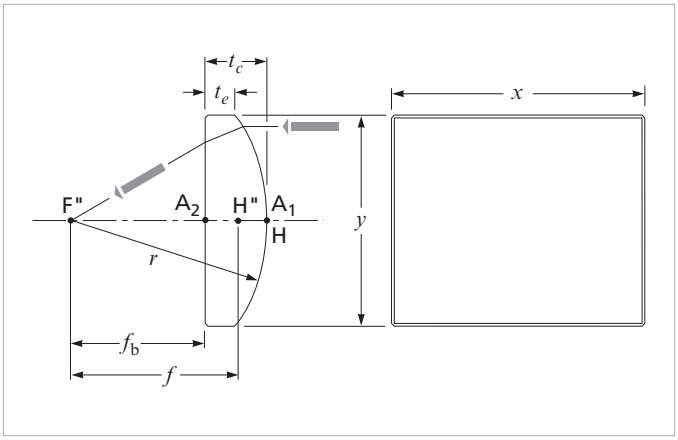

Rectangular cylindrical plano-convex lens

IDEX OPTICS & PHOTONICS MARKETPLACE

Standard Uncoated Products

f (mm)	x (mm)	y (mm)	r (mm)	t_c (mm)	t_e (mm)	f/#	f_b (mm)	PART NUMBER
Precision Fused Silica Rectangular Cylindrical Plano-Convex Lenses								
12.7	12.7	6.4	6.5	3.0	2.2	2.3	10.8	RCX-12.7-6.4-6.5-UV
20.0	12.7	6.4	10.2	3.0	2.5	3.7	18.1	RCX-12.7-6.4-10.2-UV
25.0	25.4	12.7	12.7	5.0	3.3	2.3	21.8	RCX-25.4-12.7-12.7-UV
30.0	40.0	25.4	15.3	11.0	4.2	1.4	23.0	RCX-40.0-25.4-15.3-UV
40.0	25.0	15.0	20.3	5.0	3.6	3.1	36.8	RCX-25.0-15.0-20.3-UV
40.0	40.0	20.0	20.3	6.0	3.4	2.4	36.2	RCX-40.0-20.0-20.3-UV
50.0	40.0	25.4	25.4	9.0	5.6	2.3	44.2	RCX-40.0-25.4-25.4-UV
60.0	40.0	25.4	30.5	7.0	4.2	2.8	55.5	RCX-40.0-25.4-30.5-UV
75.0	40.0	25.4	38.1	5.0	2.8	3.5	71.8	RCX-40.0-25.4-38.1-UV
100.0	40.0	25.4	50.9	5.0	3.4	4.6	96.8	RCX-40.0-25.4-50.9-UV
125.0	40.0	25.4	63.6	5.0	3.7	5.8	121.8	RCX-40.0-25.4-63.6-UV
150.0	40.0	25.4	76.3	5.0	3.9	6.9	146.8	RCX-40.0-25.4-76.3-UV
200.0	30.0	20.0	101.7	5.0	4.5	11.8	196.8	RCX-30.0-20.0-101.7-UV
200.0	40.0	25.4	101.7	5.0	4.2	9.3	196.8	RCX-40.0-25.4-101.7-UV
250.0	30.0	20.0	127.1	5.0	4.6	14.7	246.8	RCX-30.0-20.0-127.1-UV
250.0	40.0	25.4	127.1	5.0	4.4	11.6	246.8	RCX-40.0-25.4-127.1-UV
300.0	40.0	25.4	152.6	5.0	4.5	13.9	296.8	RCX-40.0-25.4-152.6-UV
400.0	40.0	25.4	203.4	5.0	4.6	18.5	396.8	RCX-40.0-25.4-203.4-UV
500.0	40.0	25.4	254.3	5.0	4.7	23.2	496.8	RCX-40.0-25.4-254.3-UV
750.0	40.0	25.4	381.4	5.0	4.8	34.7	746.8	RCX-40.0-25.4-381.4-UV
1000.0	40.0	25.4	508.6	5.0	4.8	46.3	996.8	RCX-40.0-25.4-508.6-UV

Semi Custom Use the selection menu below to add a coating to a Standard Uncoated Product

YOUR CUSTOM PART NUMBER **RCX-40.0-25.4-30.5-UV — 193**

WAVELENGTH OF AR COATING (nm); for uncoated leave blank

193	**266**	**400**	**532**	**700-900**	**808**	**1053**	**1550**
248	**355**	**405**	**633**	**780**	**1030**	**1064**	
248-355	**355-532**	**415-700**	**633-1064**	**800**	**1050-1600**	**1064/532**	

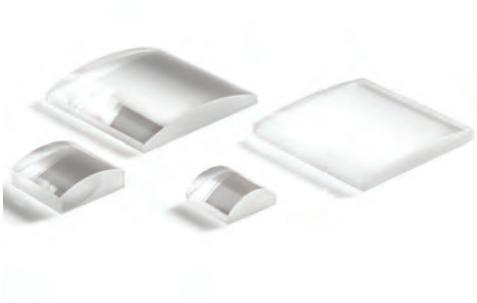

CVI Laser Optics

PRECISION N-BK7 SQUARE CYLINDRICAL PLANO-CONVEX LENSES

Other focal lengths and dimensions available. Contact us for pricing and delivery details.

- Anamorphic beam shaping and laser projection
- Illumination of detector arrays
- Low loss, high energy AR coatings

Specifications

Product Code: SCX-C

Optical Material: N-BK7

Surface Figure (p-v at 633 nm before coating):
Cylindrical side: λ (y-axis), λ/cm flatness (x-axis)
Plano side: λ/4 flatness

Surface Quality: 20-10 scratch and dig

Dimensional Tolerance: +0/–0.25 mm

Center Thickness: t_c ±0.25 mm

Chamfer: 0.35 mm at 45° typical

Wedge: ≤ 3 arc minutes

Paraxial Focal Length: f ±0.5% typical

Antireflection Coating: Wavelength user specified
Narrowband: R ≤ 0.25% per surface
Broadband: R_{avg} ≤ 0.5% per surface

Clear Aperture (CA): ≥ 85% of central dimension

Damage Threshold: 10 J/cm², 20 nsec, 20 Hz @ 1064 nm

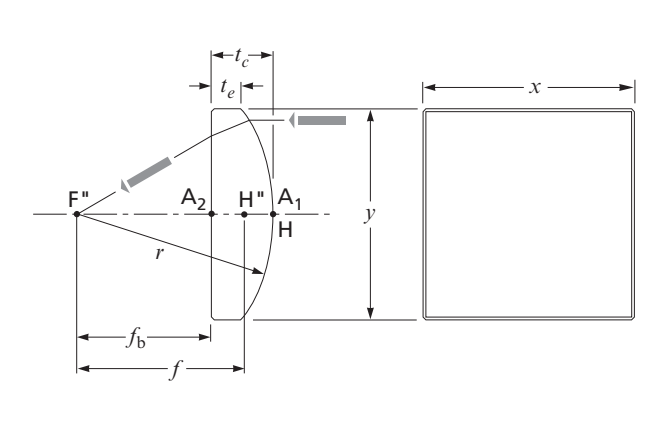

Square cylindrical plano-convex lens

IDEX OPTICS & PHOTONICS MARKETPLACE

Standard Uncoated Products

f (mm)	x = y (mm)	r (mm)	t_c (mm)	t_e (mm)	f/#	f_b (mm)	PART NUMBER
Precision N-BK7 Square Cylindrical Plano-Convex Lenses							
50.0	25.4	25.4	9.0	5.6	2.3	44.1	SCX-25.4-25.4-C
60.0	20.0	30.5	5.0	3.3	3.5	56.7	SCX-20.0-30.5-C
75.0	20.0	38.1	5.0	3.7	4.4	71.7	SCX-20.0-38.1-C
100.0	20.0	50.9	5.0	4.0	5.9	96.7	SCX-20.0-50.9-C
100.0	50.8	50.9	10.0	3.2	2.3	93.4	SCX-50.8-50.9-C
125.0	25.4	63.6	5.0	3.7	5.8	121.7	SCX-25.4-63.6-C
150.0	20.0	76.3	5.0	4.3	8.8	146.7	SCX-20.0-76.3-C
150.0	25.4	76.3	5.0	3.9	6.9	146.7	SCX-25.4-76.3-C
200.0	25.4	101.7	5.0	4.2	9.3	196.7	SCX-25.4-101.7-C
250.0	25.4	127.1	5.0	4.4	11.6	246.7	SCX-25.4-127.1-C
300.0	25.4	152.6	5.0	4.5	13.9	296.7	SCX-25.4-152.6-C
300.0	50.8	152.6	6.4	4.2	6.9	295.8	SCX-50.8-152.6-C
400.0	20.0	203.4	5.0	4.7	23.5	396.7	SCX-20.0-203.4-C
500.0	20.0	254.3	5.0	4.8	29.4	496.7	SCX-20.0-254.3-C
500.0	50.8	254.3	6.4	5.1	11.6	495.8	SCX-50.8-254.3-C
750.0	50.8	381.4	6.4	5.5	17.4	745.8	SCX-50.8-381.4-C
2000.0	50.8	1000.0	6.4	6.0	46.3	1995.8	SCX-50.8-1000.0-C
10000.0	50.8	5000.0	6.4	6.3	231.6	9995.8	SCX-50.8-5000.0-C

Semi Custom Use the selection menu below to add a coating to a Standard Uncoated Product

YOUR CUSTOM PART NUMBER **SCX-50.8-152.6-C — 1064**

WAVELENGTH OF AR COATING (nm); for uncoated leave blank

415 - 700	**633 - 1064**	**808**	**1053**	**1550**
532	**780**	**1030**	**1064**	
633	**800**	**1050 - 1600**	**1064/532**	

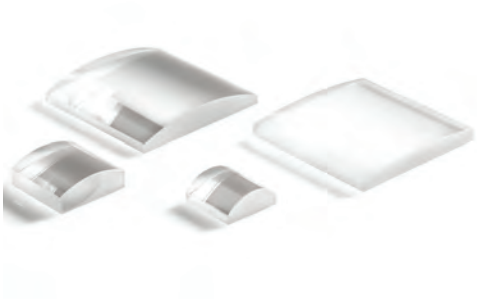

CVI Laser Optics

PRECISION FUSED SILICA SQUARE CYLINDRICAL PLANO-CONVEX LENSES

Other focal lengths and dimensions available.
Contact us for pricing and delivery details.

- UV laser-line focusing
- Anamorphic beam shaping and laser projection
- Illumination of detector arrays
- Low loss, high energy AR coatings

Specifications

Product Code: SCX-UV

Optical Material: UV-grade fused silica

Surface Figure (p-v at 633 nm before coating):
Cylindrical side: λ (y-axis), λ/cm flatness (x-axis)
Plano side: λ/4 flatness

Surface Quality: 20-10 scratch and dig

Dimensional Tolerance: +0/–0.25 mm

Center Thickness: t_c ±0.25 mm

Chamfer, 0.35 mm at 45° typical

Wedge: ≤ 3 arc minutes

Paraxial Focal Length: f ±0.5% typical

Antireflection Coating: Wavelength user specified
Narrowband: R ≤ 0.25% per surface
Broadband: R_{avg} ≤ 0.5% per surface

Clear Aperture (CA): ≥ 85% of central dimension

Damage Threshold: 10 J/cm², 20 nsec, 20 Hz @ 1064 nm

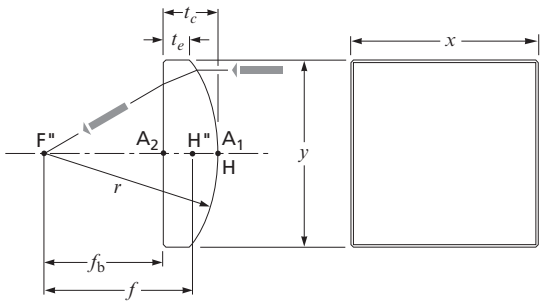

Square cylindrical plano-convex lens

Semi Custom

Add a coating to a Standard Uncoated Product

YOUR CUSTOM PART NUMBER	SCX-50.8-152.6-UV	—	1064

WAVELENGTH OF AR COATING (nm); for uncoated leave blank

193	355 - 532	633	808	1064/532
248	400	633 - 1064	1030	1550
248 - 355	405	700 - 900	1050 - 1600	
266	415 - 700	780	1053	
355	532	800	1064	

IDEX OPTICS & PHOTONICS MARKETPLACE

Standard Uncoated Products

f (mm)	x = y (mm)	r (mm)	t_c (mm)	t_e (mm)	f/#	f_b (mm)	PART NUMBER
Precision Fused Silica Square Cylindrical Plano-Convex Lenses							
25.0	20.0	12.7	8.0	3.1	1.5	19.9	SCX-20.0-12.7-UV
40.0	15.0	20.3	5.0	3.6	3.1	36.8	SCX-15.0-20.3-UV
40.0	25.4	20.3	9.0	4.5	1.9	34.2	SCX-25.4-20.3-UV
50.0	25.4	25.4	9.0	5.6	2.3	44.2	SCX-25.4-25.4-UV
50.0	30.0	25.4	9.0	4.1	2.0	44.2	SCX-30.0-25.4-UV
60.0	25.4	30.5	7.0	4.2	2.8	55.5	SCX-25.4-30.5-UV
75.0	25.4	38.1	5.0	2.8	3.5	71.8	SCX-25.4-38.1-UV
75.0	30.0	38.1	7.0	3.9	2.9	70.5	SCX-30.0-38.1-UV
75.0	50.8	38.1	12.7	3.0	1.7	66.9	SCX-50.8-38.1-UV
100.0	20.0	50.9	5.0	4.0	5.9	96.8	SCX-20.0-50.9-UV
100.0	25.4	50.9	5.0	3.4	4.6	96.8	SCX-25.4-50.9-UV
100.0	50.8	50.9	10.0	3.2	2.3	93.6	SCX-50.8-50.9-UV
125.0	20.0	63.6	5.0	4.2	7.4	121.8	SCX-20.0-63.6-UV
125.0	25.4	63.6	5.0	3.7	5.8	121.8	SCX-25.4-63.6-UV
125.0	50.8	63.6	8.5	3.2	2.9	119.6	SCX-50.8-63.6-UV
150.0	20.0	76.3	5.0	4.3	8.8	146.8	SCX-20.0-76.3-UV
150.0	25.4	76.3	5.0	3.9	6.9	146.8	SCX-25.4-76.3-UV
150.0	50.8	76.3	8.0	3.6	3.5	144.9	SCX-50.8-76.3-UV
200.0	25.4	101.7	5.0	4.2	9.3	196.8	SCX-25.4-101.7-UV
200.0	50.8	101.7	6.4	3.1	4.6	195.9	SCX-50.8-101.7-UV
250.0	20.0	127.1	5.0	4.6	14.7	246.8	SCX-20.0-127.1-UV
250.0	25.4	127.1	5.0	4.4	11.6	246.8	SCX-25.4-127.1-UV
250.0	50.8	127.1	6.4	3.8	5.8	245.9	SCX-50.8-127.1-UV
300.0	25.4	152.6	5.0	4.5	13.9	296.8	SCX-25.4-152.6-UV
300.0	50.8	152.6	6.4	4.2	6.9	295.9	SCX-50.8-152.6-UV
400.0	20.0	203.4	5.0	4.7	23.5	396.8	SCX-20.0-203.4-UV
400.0	50.8	203.4	6.4	4.8	9.3	395.9	SCX-50.8-203.4-UV
500.0	20.0	254.3	5.0	4.8	29.4	496.8	SCX-20.0-254.3-UV
500.0	25.4	254.3	5.0	4.7	23.2	496.8	SCX-25.4-254.3-UV
500.0	50.8	254.3	6.4	5.1	11.6	495.9	SCX-50.8-254.3-UV
750.0	25.4	381.4	5.0	4.8	34.7	746.8	SCX-25.4-381.4-UV
750.0	50.8	381.4	6.4	5.5	17.4	745.9	SCX-50.8-381.4-UV
1000.0	20.0	508.6	5.0	4.9	58.8	996.8	SCX-20.0-508.6-UV
1000.0	25.4	508.6	5.0	4.8	46.3	996.8	SCX-25.4-508.6-UV
1000.0	50.8	508.6	6.4	5.7	23.2	995.9	SCX-50.8-508.6-UV
2000.0	50.8	1000.0	6.4	6.0	46.3	1995.9	SCX-50.8-1000.0-UV
10000.0	50.8	5000.0	6.4	6.3	231.6	9995.9	SCX-50.8-5000.0-UV

CVI Laser Optics

PRECISION N-BK7 ROUND CYLINDRICAL PLANO-CONVEX LENSES

Other focal lengths and dimensions available. Contact us for pricing and delivery details.

- Anamorphic beam shaping and laser projection
- Illumination of detector arrays
- Low loss, high energy AR coatings

Specifications

Product Code: CLCX-C

Optical Material: N-BK7

Surface Figure (p-v at 633 nm before coating):
Cylindrical side: λ (y-axis), λ/cm flatness (x-axis)
Plano side: λ/4 flatness

Surface Quality: 20-10 scratch and dig

Dimensional Tolerance: +0/–0.25 mm

Center Thickness: t_c ±0.25 mm

Chamfer: 0.35 mm at 45° typical

Wedge: ≤ 3 arc minutes

Paraxial Focal Length: *f* ±0.5% typical

Antireflection Coating: Wavelength user specified
Narrowband: R ≤ 0.25% per surface
Broadband: R_{avg} ≤ 0.5% per surface

Clear Aperture (CA): ≥ 85% of central dimension

Damage Threshold: 10 J/cm², 20 nsec, 20 Hz @ 1064 nm

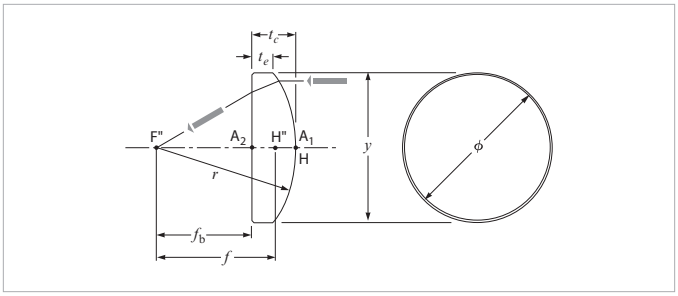

Round cylindrical plano-convex lens

Semi Custom

Add a coating to a Standard Uncoated Product

YOUR CUSTOM PART NUMBER	CLCX-25.4-38.1-C	—	633

WAVELENGTH OF AR COATING (nm); for uncoated leave blank

415 - 700	633 - 1064	808	1053	1550
532	780	1030	1064	
633	800	1050 - 1600	1064/532	

Standard Uncoated Products

f (mm)	Ø (mm)	r (mm)	t_c (mm)	t_e (mm)	f/#	f_b (mm)	PART NUMBER
Precision N-BK7 Round Cylindrical Plano-Convex Lenses							
20.0	15.0	10.2	6.0	2.7	1.6	16.0	CLCX-15.0-10.2-C
50.0	25.4	25.4	7.4	4.0	2.3	45.1	CLCX-25.4-25.4-C
75.0	25.4	38.1	6.2	4.0	3.5	70.9	CLCX-25.4-38.1-C
100.0	25.4	50.9	5.6	4.0	4.6	96.3	CLCX-25.4-50.9-C
100.0	30.0	50.9	6.0	3.7	3.9	96.0	CLCX-30.0-50.9-C
150.0	25.4	76.3	5.1	4.0	6.9	146.6	CLCX-25.4-76.3-C
150.0	50.8	76.3	8.0	3.6	3.5	144.7	CLCX-50.8-76.3-C

1-505-298-2550
IDEX OPTICS & PHOTONICS MARKETPLACE

CVI Laser Optics

PRECISION FUSED SILICA ROUND CYLINDRICAL PLANO-CONVEX LENSES

Other focal lengths and dimensions available. Contact us for pricing and delivery details.

- UV laser-line focusing
- Low loss, high energy AR coatings

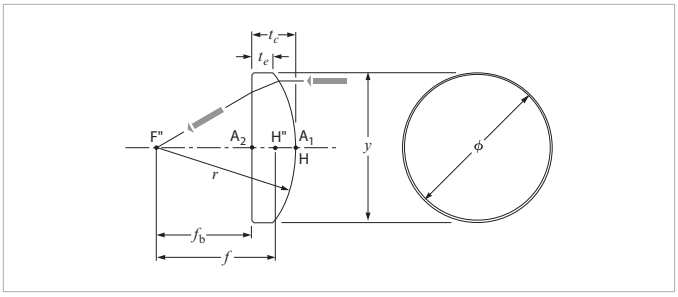

Round cylindrical plano-convex lens

Specifications

Product Code: CLCX-UV

Optical Material: N-BK7

Surface Figure (p-v at 633 nm before coating):
Cylindrical side: λ (y-axis), λ/cm flatness (x-axis)
Plano side: λ/4 flatness

Surface Quality: 20-10 scratch and dig

Dimensional Tolerance: +0/–0.25 mm

Center Thickness: t_c ±0.25 mm

Chamfer: 0.35 mm at 45° typical

Wedge: ≤ 3 arc minutes

Paraxial Focal Length: f ±0.5% typical

Antireflection Coating: Wavelength user specified
Narrowband: R ≤ 0.25% per surface
Broadband: R_{avg} ≤ 0.5% per surface

Clear Aperture (CA): ≥ 85% of central dimension

Damage Threshold: 10 J/cm², 20 nsec, 20 Hz @ 1064 nm

Semi Custom

Add a coating to a Standard Uncoated Product

YOUR CUSTOM PART NUMBER	CLCX-25.4-25.4-UV	—	193

WAVELENGTH OF AR COATING (nm); for uncoated leave blank

193	266	400	633 - 1064	1030
248	355	415 - 700	700 - 900	1053
248 - 355	355 - 532	532	800	1064

Standard Uncoated Products

f (mm)	Ø (mm)	r (mm)	t_c (mm)	t_e (mm)	f/#	f_b (mm)	PART NUMBER
Precision Fused Silica Round Cylindrical Plano-Convex Lenses							
30.0	25.4	15.3	11.0	4.2	1.4	23.0	CLCX-25.4-15.3-UV
50.0	25.4	25.4	7.4	4.0	2.3	45.3	CLCX-25.4-25.4-UV
60.0	25.4	30.5	7.0	4.2	2.8	55.5	CLCX-25.4-30.5-UV
75.0	25.4	38.1	6.2	4.0	3.5	71.0	CLCX-25.4-38.1-UV
100.0	25.4	50.9	5.6	4.0	4.6	96.4	CLCX-25.4-50.9-UV
100.0	50.8	50.9	10.0	3.2	2.3	93.6	CLCX-50.8-50.9-UV
150.0	25.4	76.3	5.1	4.0	6.9	146.7	CLCX-25.4-76.3-UV
150.0	50.8	76.3	8.0	3.6	3.5	144.9	CLCX-50.8-76.3-UV

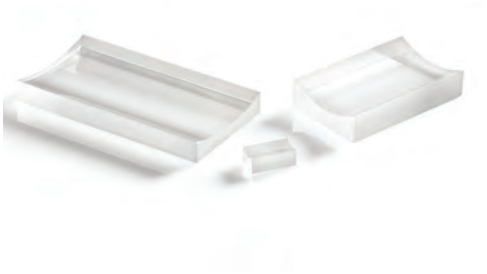

CVI Laser Optics

STANDARD N-BK7 RECTANGULAR CYLINDRICAL PLANO-CONCAVE LENSES

Plano-concave cylindrical lenses are negative lenses. They are used primarily to expand an image in a single direction. Our standard-grade lenses are manufactured from N-BK7 glass.

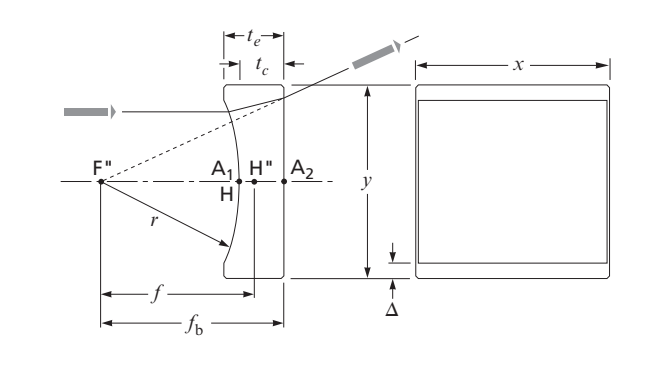

Standard N-BK7 rectangular cylindrical plano-concave lens

Specifications

Product Code: LCN-C

Optical Material: N-BK7

Clear Aperture (CA): ≥ 90% of central dimension

Surface Quality: 60-40 scratch and dig

Dimensional Tolerance: ±0.6 mm

Flat Island Width (Δ): 0.5±0.4 mm

Center Thickness: t_c±0.6 mm

Chamfer: Slight protective bevel

Wedge ($\Delta t_c/x$): ≤ 8 mrad

Paraxial Focal Length: f±2%

Design Wavelength: 587.6 nm

Antireflection Coating: Wavelegth user specified

Semi Custom

Add a coating to a Standard Uncoated Product

YOUR CUSTOM PART NUMBER	LCN-25.0-7.0-3.3-C	—	415-700

WAVELENGTH OF AR COATING (nm); for uncoated leave blank

415 - 700	633 - 1064

Standard Uncoated Products

f (mm)	x (mm)	y (mm)	r (mm)	t_c (mm)	t_e (mm)	f/#	f_b (mm)	PART NUMBER
Standard N-BK7 Rectangular Cylindrical Plano-Concave Lenses								
–6.4	25.0	7.0	3.3	3.1	5.1	-1.1	–8.4	LCN-25.0-7.0-3.3-C
–10.0	12.5	10.0	5.2	4.0	6.6	–1.1	–12.6	LCN-12.5-10.0-5.2-C
–12.7	25.0	13.0	6.6	3.2	7.1	–1.1	–14.8	LCN-25.0-13.0-6.6-C
–19.0	25.0	16.0	9.8	3.6	7.1	–1.3	–21.4	LCN-25.0-16.0-9.8-C
–60.0	60.0	21.0	31.0	4.4	6.1	–3.0	–62.9	LCN-60.0-21.0-31.0-C
–80.0	60.0	31.0	41.3	3.2	6.0	–2.7	–82.1	LCN-60.0-31.0-41.3-C
–100.0	60.0	51.0	51.7	3.0	9.4	–2.0	–102.0	LCN-60.0-51.0-51.7-C
–150.0	60.0	51.0	77.5	5.4	9.5	–3.0	–153.6	LCN-60.0-51.0-77.5-C
–200.0	60.0	51.0	103.4	6.5	9.6	–4.0	–204.3	LCN-60.0-51.0-103.4-C

1-505-298-2550

IDEX OPTICS & PHOTONICS MARKETPLACE

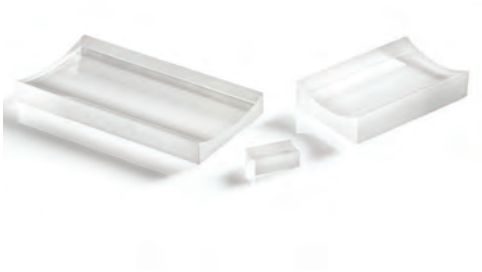

CVI Laser Optics

PRECISION N-BK7 RECTANGULAR CYLINDRICAL PLANO-CONCAVE LENSES

Precision-grade lenses are manufactured to much higher specifications than the preceding standard LCN lenses. They offer high surface quality with low surface roughness and tight centration control for performance critical and high energy applications.

- Anamorphic beam shaping and laser line generation
- Illumination of slit and line detector arrays
- Wide selection of low loss, high energy AR coatings
- Custom focal lengths and dimensions available

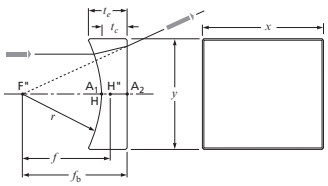

Precision rectangular cylindrical plano-concave lens

Specifications

Product Code: RCC-C

Optical Material: N-BK7

Surface Figure (p-v at 633 nm before coating):
Cylindrical side: λ (y-axis), λ/cm flatness (x-axis)
Plano side: λ/4 flatness

Surface Quality: 20-10 scratch and dig

Dimensional Tolerance: +0/–0.25 mm

Center Thickness: t_c±0.25 mm

Chamfer: 0.35 mm at 45° typical

Wedge: ≤ 3 arc minutes

Paraxial Focal Length: *f* ±0.5% typical

Antireflection Coating: Wavelength user specified
Narrowband: R ≤ 0.25% per surface
Broadband: R_{avg} ≤ 0.5% per surface

Clear Aperture (CA): ≥ 85% of central dimension

Damage Threshold: 10 J/cm², 20 nsec, 20 Hz @ 1064 nm

Semi Custom

Add a coating to a Standard Uncoated Product

YOUR CUSTOM PART NUMBER	RCC-40.0-25.4-38.1-C	—	633

WAVELENGTH OF AR COATING (nm); for uncoated leave blank

415 - 700	633 - 1064	808	1053	1550
532	780	1030	1064	
633	800	1050 - 1600	1064/532	

Standard Uncoated Products

f (mm)	x (mm)	y (mm)	r (mm)	t_c (mm)	t_e (mm)	f/#	f_b (mm)	PART NUMBER
Precision N-BK7 Rectangular Cylindrical Plano-Concave Lenses								
–12.7	12.7	6.4	6.5	4.0	4.8	–2.3	–15.3	RCC-12.7-6.4-6.5-C
–20.0	25.0	15.0	10.2	2.8	6.0	–1.6	–21.8	RCC-25.0-15.0-10.2-C
–25.0	25.0	15.0	12.7	3.7	6.0	–2.0	–27.4	RCC-25.0-15.0-12.7-C
–50.0	40.0	25.4	25.4	5.0	8.4	–2.3	–53.3	RCC-40.0-25.4-25.4-C
–75.0	40.0	25.4	38.1	5.0	7.2	–3.5	–78.3	RCC-40.0-25.4-38.1-C
–100.0	40.0	25.4	50.9	5.0	6.6	–4.6	–103.3	RCC-40.0-25.4-50.9-C
–200.0	40.0	25.4	101.7	5.0	5.8	–9.3	–203.3	RCC-40.0-25.4-101.7-C
–250.0	40.0	25.4	127.1	5.0	5.6	–11.6	–253.3	RCC-40.0-25.4-127.1-C
–300.0	40.0	25.4	152.6	5.0	5.5	–13.9	–303.3	RCC-40.0-25.4-152.6-C

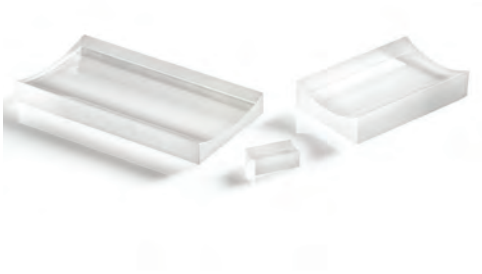

CVI Laser Optics

PRECISION FUSED SILICA RECTANGULAR CYLINDRICAL PLANO-CONCAVE LENSES

Other focal lengths and dimensions available. Contact us for pricing and delivery details.

- Anamorphic beam shaping and laser projection
- Illumination of detector arrays
- Low loss, high energy AR coatings

Specifications

Product Code: RCC-UV

Optical Material: UV-grade fused silica

Surface Figure (p-v at 633 nm before coating):
Cylindrical side: λ (y-axis), λ/cm flatness (x-axis)
Plano side: λ/4 flatness

Surface Quality: 20-10 scratch and dig

Dimensional Tolerance: +0/–0.25 mm

Center Thickness: t_c±0.25 mm

Chamfer: 0.35 mm at 45° typical

Wedge: ≤ 3 arc minutes

Paraxial Focal Length: f±0.5% typical

Antireflection Coating: Wavelength user specified
Narrowband: R ≤ 0.25% per surface
Broadband: R_{avg} ≤ 0.5% per surface

Clear Aperture (CA): ≥ 85% of central dimension

Damage Threshold: 10 J/cm², 20 nsec, 20 Hz @ 1064 nm

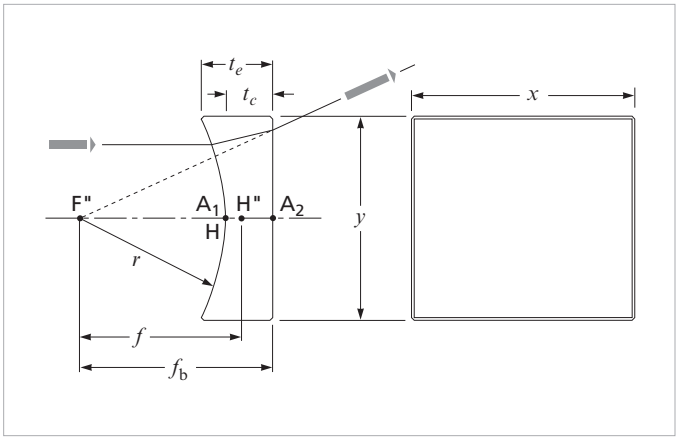

Precision rectangular cylindrical plano-concave lens

IDEX OPTICS & PHOTONICS MARKETPLACE

Standard Uncoated Products

f (mm)	x (mm)	y (mm)	r (mm)	t_c (mm)	t_e (mm)	f/#	f_b (mm)	PART NUMBER
Precision Fused Silica Rectangular Cylindrical Plano-Concave Lenses								
–10.0	12.7	6.4	5.1	2.0	3.0	–1.8	–11.3	RCC-12.7-6.4-5.1-UV
–12.7	12.7	6.4	6.5	4.0	4.8	–2.3	–15.3	RCC-12.7-6.4-6.5-UV
–20.0	25.0	15.0	10.2	2.8	6.0	–1.6	–21.8	RCC-25.0-15.0-10.2-UV
–25.0	40.0	20.0	12.7	4.2	9.0	–1.5	–27.7	RCC-40.0-20.0-12.7-UV
–30.0	25.0	15.0	15.3	3.1	5.0	–2.4	–32.0	RCC-25.0-15.0-15.3-UV
–40.0	40.0	25.4	20.3	4.6	9.0	–1.9	–42.9	RCC-40.0-25.4-20.3-UV
–50.0	40.0	25.4	25.4	5.0	8.4	–2.3	–53.2	RCC-40.0-25.4-25.4-UV
–75.0	40.0	25.4	38.1	5.0	7.2	–3.5	–78.2	RCC-40.0-25.4-38.1-UV
–100.0	40.0	25.4	50.9	5.0	6.6	–4.6	–103.2	RCC-40.0-25.4-50.9-UV
–200.0	40.0	25.4	101.7	5.0	5.8	–9.3	–203.2	RCC-40.0-25.4-101.7-UV
–250.0	40.0	25.4	127.1	5.0	5.6	–11.6	–253.2	RCC-40.0-25.4-127.1-UV
–300.0	40.0	25.4	152.6	5.0	5.5	–13.9	–303.2	RCC-40.0-25.4-152.6-UV
–400.0	40.0	25.4	203.4	5.0	5.4	–18.5	–403.2	RCC-40.0-25.4-203.4-UV
–500.0	40.0	25.4	254.3	5.0	5.3	–23.2	–503.2	RCC-40.0-25.4-254.3-UV
–1000.0	40.0	25.4	508.6	5.0	5.2	–46.3	–1003.2	RCC-40.0-25.4-508.6-UV

Semi Custom Use the selection menu below to add a coating to a Standard Uncoated Product

YOUR CUSTOM PART NUMBER **RCC-40.0-25.4-25.4-UV** — **633**

WAVELENGTH OF AR COATING (nm); FOR UNCOATED LEAVE BLANK

193	**266**	**400**	**532**	**700 - 900**	**808**	**1053**	**1550**
248	**355**	**405**	**633**	**780**	**1030**	**1064**	
248 - 355	**355 - 532**	**415 - 700**	**633 - 1064**	**800**	**1050 - 1600**	**1064/532**	

CVI Laser Optics

PRECISION N-BK7 SQUARE CYLINDRICAL PLANO-CONCAVE LENSES

Other focal lengths and dimensions available. Contact us for pricing and delivery details.

- Anamorphic beam shaping and laser projection
- Illumination of detector arrays
- Low loss, high energy AR coatings

Specifications

Product Code: SCC-C

Optical Material: N-BK7

Surface Figure (p-v at 633 nm before coating):
Cylindrical side: λ (y-axis), λ/cm flatness (x-axis)
Plano side: λ/4 flatness

Surface Quality: 20-10 scratch and dig

Dimensional Tolerance: +0/–0.25 mm

Center Thickness: t_c ±0.25 mm

Chamfer: 0.35 mm at 45° typical

Wedge: ≤ 3 arc minutes

Paraxial Focal Length: f ±0.5% typical

Antireflection Coating: Wavelength user specified
Narrowband: R ≤ 0.25% per surface
Broadband: R_{avg} ≤ 0.5% per surface

Clear Aperture (CA): ≥ 85% of central dimension

Damage Threshold: 10 J/cm², 20 nsec, 20 Hz @ 1064 nm

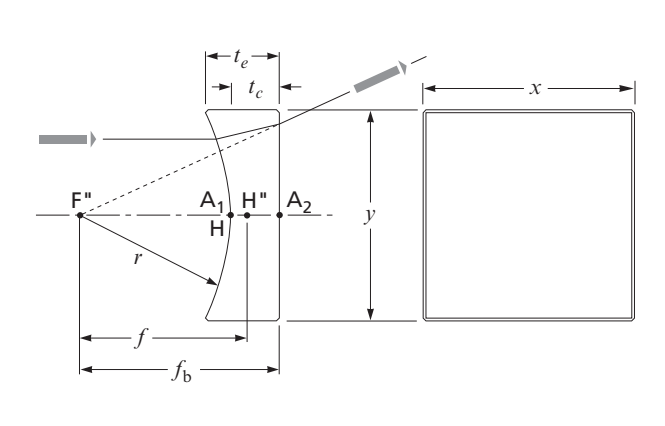

Precision square cylindrical plano-concave lens

IDEX OPTICS & PHOTONICS MARKETPLACE

Standard Uncoated Products

f (mm)	x = y (mm)	r (mm)	t_c (mm)	t_e (mm)	f/#	f_b (mm)	PART NUMBER
Precision N-BK7 Square Cylindrical Plano-Concave Lenses							
–30.0	20.0	15.3	4.3	8.0	–1.8	–32.8	SCC-20.0-15.3-C
–60.0	25.4	30.5	4.3	7.0	–2.8	–62.8	SCC-25.4-30.5-C
–75.0	50.8	38.1	8.0	17.6	–1.7	–80.3	SCC-50.8-38.1-C
–100.0	50.8	50.9	8.0	14.7	–2.3	–105.3	SCC-50.8-50.9-C
–250.0	50.8	127.1	6.0	8.5	–5.8	–254.0	SCC-50.8-127.1-C
–400.0	20.0	203.4	3.8	4.0	–23.5	–402.5	SCC-20.0-203.4-C
–500.0	20.0	254.3	3.9	4.0	–29.4	–502.6	SCC-20.0-254.3-C
–500.0	50.8	254.3	6.0	7.3	–11.6	–504.0	SCC-50.8-254.3-C
–1000.0	20.0	508.6	3.9	4.0	–58.8	–1002.6	SCC-20.0-508.6-C

Semi Custom

Use the selection menu below to add a coating to a Standard Uncoated Product

YOUR CUSTOM PART NUMBER	SCC-50.8-50.9-C	—	800

WAVELENGTH OF AR COATING (nm); for uncoated leave blank

415 - 700	**633 -1064**	**808**	**1053**	**1550**
532	**780**	**1030**	**1064**	
633	**800**	**1050 - 1600**	**1064/532**	

CVI Laser Optics

PRECISION FUSED SILICA SQUARE CYLINDRICAL PLANO-CONCAVE LENSES

Other focal lengths and dimensions available. Contact us for pricing and delivery details.

- Anamorphic beam shaping and laser projection
- Illumination of detector arrays
- Low loss, high energy AR coatings

Specifications

Product Code: SCC-UV

Optical Material: UV-grade fused silica

Surface Figure (p-v at 633 nm before coating):
Cylindrical side: λ (y-axis), λ/cm flatness (x-axis)
Plano side: λ/4 flatness

Surface Quality: 20-10 scratch and dig

Dimensional Tolerance: +0/–0.25 mm

Center Thickness: tc±0.25 mm

Chamfer: 0.35 mm at 45° typical

Wedge: ≤ 3 arc minutes

Paraxial Focal Length: f ±0.5% typical

Antireflection Coating: Wavelength user specified
Narrowband: R ≤ 0.25% per surface
Broadband: Ravg ≤ 0.5% per surface

Clear Aperture (CA): ≥ 85% of central dimension

Damage Threshold: 10 J/cm², 20 nsec, 20 Hz @ 1064 nm

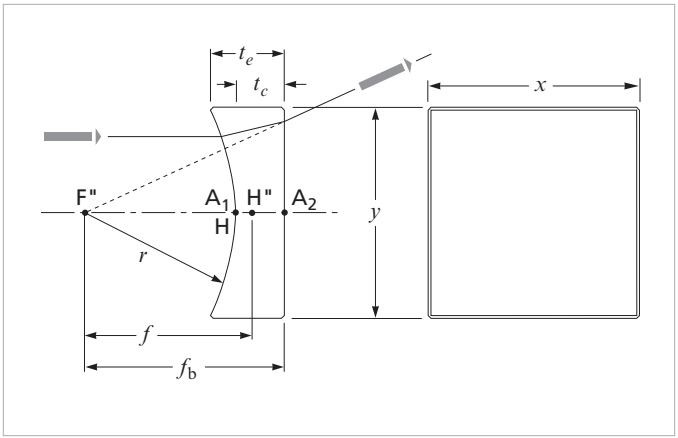

Precision square cylindrical plano-concave lens

IDEX OPTICS & PHOTONICS MARKETPLACE

Standard Uncoated Products

f (mm)	x = y (mm)	r (mm)	t_c (mm)	t_e (mm)	f/#	f_b (mm)	PART NUMBER
Precision Fused Silica Square Cylindrical Plano-Concave Lenses							
–20.0	15.0	10.2	2.8	6.0	–1.6	–21.9	SCC-15.0-10.2-UV
–25.0	12.7	12.7	3.7	5.4	–2.3	–27.5	SCC-12.7-12.7-UV
–40.0	25.4	20.3	4.6	9.0	–1.9	–42.9	SCC-25.4-20.3-UV
–50.0	25.4	25.4	5.0	8.4	–2.3	–53.2	SCC-25.4-25.4-UV
–60.0	25.4	30.5	4.3	7.0	–2.8	–62.8	SCC-25.4-30.5-UV
–75.0	25.4	38.1	5.0	7.2	–3.5	–78.2	SCC-25.4-38.1-UV
–100.0	25.4	50.9	5.0	6.6	–4.6	–103.2	SCC-25.4-50.9-UV
–100.0	50.8	50.9	8.0	14.7	–2.3	–105.1	SCC-50.8-50.9-UV
–125.0	25.4	63.6	5.0	6.3	–5.8	–128.2	SCC-25.4-63.6-UV
–150.0	20.0	76.3	3.4	4.0	–8.8	–152.2	SCC-20.0-76.3-UV
–200.0	25.4	101.7	5.0	5.8	–9.3	–203.2	SCC-25.4-101.7-UV
–250.0	25.4	127.1	5.0	5.6	–11.6	–253.2	SCC-25.4-127.1-UV
–300.0	25.4	152.6	5.0	5.5	–13.9	–303.2	SCC-25.4-152.6-UV
–500.0	25.4	254.3	5.0	5.3	–23.2	–503.2	SCC-25.4-254.3-UV
–500.0	50.8	254.3	6.0	7.3	–11.6	–503.8	SCC-50.8-254.3-UV
–750.0	25.4	381.4	5.0	5.2	–34.7	–753.2	SCC-25.4-381.4-UV
–750.0	50.8	381.4	6.0	6.8	–17.4	–753.8	SCC-50.8-381.4-UV
–1000.0	25.4	508.6	5.0	5.2	–46.3	–1003.2	SCC-25.4-508.6-UV
–1000.0	50.8	508.6	6.0	6.6	–23.2	–1003.8	SCC-50.8-508.6-UV
–2000.0	50.8	1000.0	6.0	6.3	–46.3	–2003.8	SCC-50.8-1000.0-UV
–10000.0	50.8	5000.0	6.0	6.1	–231.6	–10003.8	SCC-50.8-5000.0-UV

Semi Custom Use the selection menu below add a coating to a Standard Uncoated Product

YOUR CUSTOM PART NUMBER SCC-25.4-152.6-UV — 355

WAVELENGTH OF AR COATING (nm); for uncoated leave blank

193	266	400	532	700 - 900	808	1053	1550
248	355	405	633	780	1030	1064	
248 - 355	355 - 532	415 - 700	633 - 1064	800	1050 - 1600	1064/532	

CVI Laser Optics

PRECISON N-BK7 ROUND CYLINDRICAL PLANO-CONCAVE LENSES

Other focal lengths and dimensions available. Contact us for pricing and delivery details.

- Anamorphic beam shaping and laser projection
- Illumination of detector arrays
- Low loss, high energy AR coatings

Specifications

Product Code: CLCC-C

Optical Material: N-BK7

Surface Figure (p-v at 633 nm before coating):
Cylindrical side: λ (y-axis), λ/cm flatness (x-axis)
Plano side: λ/4 flatness

Surface Quality: 20-10 scratch and dig

Dimensional Tolerance: +0/–0.25 mm

Center Thickness: t_c ±0.25 mm

Chamfer: 0.35 mm at 45° typical

Wedge: ≤ 3 arc minutes

Paraxial Focal Length: *f* ±0.5% typical

Antireflection Coating: Wavelength user specified
Narrowband: R ≤ 0.25% per surface
Broadband: R_{avg} ≤ 0.5% per surface

Clear Aperture (CA): ≥ 85% of central dimension

Damage Threshold: 10 J/cm², 20 nsec, 20 Hz @ 1064 nm

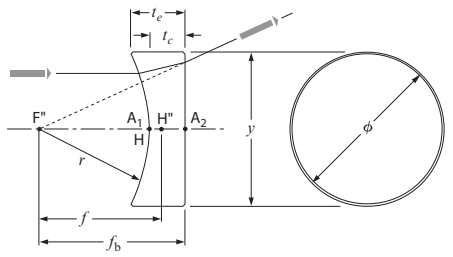

Precision round cylindrical plano-concave lens

Semi Custom

Add a coating to a Standard Uncoated Product

YOUR CUSTOM PART NUMBER	CLCC-25.4-25.4-C	—	1064

WAVELENGTH OF AR COATING (nm); for uncoated leave blank

415 - 700	633 - 1064	808	1053	1550
532	780	1030	1064	
633	800	1050 - 1600	1064/532	

Standard Uncoated Products

f (mm)	Ø (mm)	r (mm)	t_c (mm)	t_e (mm)	f/#	f_b (mm)	PART NUMBER
Precision N-BK7 Round Cylindrical Plano-Concave Lenses							
–20.0	15.0	10.2	2.8	6.0	–1.6	–21.8	CLCC-15.0-10.2-C
–30.0	20.0	15.3	4.3	8.0	–1.8	–32.8	CLCC-20.0-15.3-C
–40.0	25.4	20.3	4.6	9.0	–1.9	–43.0	CLCC-25.4-20.3-C
–50.0	25.4	25.4	5.0	8.4	–2.3	–53.3	CLCC-25.4-25.4-C

IDEX OPTICS & PHOTONICS MARKETPLACE

CVI Laser Optics

PRECISION FUSED SILICA ROUND CYLINDRICAL PLANO-CONCAVE LENSES

Other focal lengths and dimensions available. Contact us for pricing and delivery details.

- Anamorphic beam shaping and laser projection
- Illumination of detector arrays
- Low loss, high energy AR coatings

Specifications

Product Code: CLCC-UV

Optical Material: UV-grade fused silica

Surface Figure (p-v at 633 nm before coating):
Cylindrical side: λ (y-axis), λ/cm flatness (x-axis)
Plano side: λ/4 flatness

Surface Quality: 20-10 scratch and dig

Dimensional Tolerance: +0/–0.25 mm

Center Thickness: t_c ±0.25 mm

Chamfer: 0.35 mm at 45° typical

Wedge: ≤ 3 arc minutes

Paraxial Focal Length: *f* ±0.5% typical

Antireflection Coating: Wavelength user specified
Narrowband: R ≤ 0.25% per surface
Broadband: R_{avg} ≤ 0.5% per surface

Clear Aperture (CA): ≥ 85% of central dimension

Damage Threshold: 10 J/cm², 20 nsec, 20 Hz @ 1064 nm

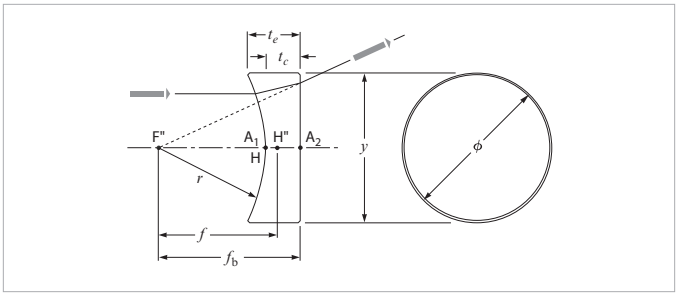

Precision round cylindrical plano-concave lens

Semi Custom

Add a coating to a Standard Uncoated Product

YOUR CUSTOM PART NUMBER	CLCC-25.4-38.1-UV	—	193

WAVELENGTH OF AR COATING (nm); for uncoated leave blank

193	266	400	633 - 1064	1030
248	355	415 - 700	700 - 900	1053
248 - 355	355 - 532	532	800	1064

Standard Uncoated Products

f (mm)	Ø (mm)	r (mm)	t_c (mm)	t_e (mm)	f/#	f_b (mm)	PART NUMBER
Precision Fused Silica Round Cylindrical Plano-Concave Lenses							
–25.0	20.0	12.7	4.2	9.1	–1.5	–27.7	CLCC-20.0-12.7-UV
–40.0	25.4	20.3	4.6	9.1	–1.9	–43.1	CLCC-25.4-20.3-UV
–50.0	25.4	25.4	5.0	8.4	–2.3	–53.2	CLCC-25.4-25.4-UV
–75.0	25.4	38.1	5.0	7.2	–3.5	–78.2	CLCC-25.4-38.1-UV
–150.0	25.4	76.3	5.0	6.1	–6.9	–153.2	CLCC-25.4-76.3-UV

MULTIELEMENT LENSES

Multielement lenses are an ideal solution for applications requiring specialized performance and/or a high degree of aberration correction. Our offering line of multielement lenses includes doublets, triplets, and assemblies to fit a wide variety of needs, many of which offer near diffraction limited performance. Our achromats, aplanats and objectives lenses are designed to minimize all sources of wavefront distortion for superior beam quality and minimum focal spot sizes. We carry F-theta lenses for scanning, and Galilean beam expanders operating at wavelengths from the UV through near-infrared. Shear plate testers are offered for accurate collimation adjustment and visual wavefront analysis.

Please see Pg. IV for the Semi Custom Selection Guide.

SELECTION GUIDE 88

ACHROMATS 90

OBJECTIVE LENSES 105

F-THETA LENSES 108

LASER BEAM EXPANDERS 109

SHEAR-PLATE COLLIMATION TESTERS 113

SELECTION GUIDE

Product Type	Surface Quality	Surface Accuracy	Operating Condition	Page
Achromats (Chromatism, Spherical Aberration and Coma Correction)				
CEMENTED DOUBLETS LASER-GRADE	20-10	λ/2 to λ/4 at 546.1 nm	Visible Low Energy	90
CEMENTED DOUBLETS PRECISION-GRADE	40-20	TWD λ/2 at 633 nm	Visible Low Energy	91
CEMENTED DOUBLETS STANDARD-GRADE	60-40	λ/2 to λ/4 at 633 nm	Visible Low Energy	92
1064/633 NM LASER TRIPLETS Air-spaced, positive & negative	40-20	TWD λ/2 at 633 nm	633 – 1064 nm (BBAR) High Energy	95
1064/532 NM LASER TRIPLETS Air-spaced, positive & negative	40-20	TWD λ/2 at 633 nm	532 + 1064 nm (Dual AR) High Energy	97

Product Type	Surface Quality	TWD	f/#	Operating Conditions	Page
Aplanats (Spherical Aberration and Coma Correction)					
VISIBLE LASER DOUBLETS Air-spaced	40-20	λ/4 at 633 nm	f/5	VIS/NIR range User specified AR High Energy	99
MOUNTED APLANATIC MENISCUS for use with Companion LAP	40-20	λ/2 at 633 nm	f/3.3 (LAP/AMP combination)	VIS/NIR range User specified AR High Energy	100
HIGH ENERGY/UV LASER DOUBLETS Fused silica, air-spaced	10-5	λ/4 at 248 nm	f/5	UV & High Energy VIS/NIR range User Specified AR High Energy	101
MOUNTED UV APLANATIC MENISCUS for use with Companion LAPQ	10-5	λ/2 at 248 nm	f/3.3 (LAPQ/AMPQ combination)	UV & High Energy VIS/NIR range User Specified AR High Energy	102
DIODE LASER DOUBLETS	60-40	λ/5 at 830 nm	f/3.8 to f/2.5	780 – 1550 nm User Specified AR Low Energy	103

IDEX OPTICS & PHOTONICS MARKETPLACE

SELECTION GUIDE

Product Type	Design	Numerical Aperture	Operating Conditions	Page
Objective Lenses				
COLLIMATING AND FOCUSING LENSES FOR DIODE LASERS	Diffraction-limited aplanat Design wavelength 405 or 830 nm	0.16 to 0.62 8.0 mm CA	395 – 415 or 633 – 1550 nm Low Energy	105
STANDARD MICROSCOPE OBJECTIVES	Achromatic for visible; 160 mm tube length; 45 mm parfocal distance	0.12 to 0.65 (Power from 4x to 40x)	Visible Low Energy	107

Product Type	Design	Focal Lengths	Operating Conditions	Page
F-Theta Lenses				
F-THETA LENSES	Flat field Air-spaced High scan linearity Tight & uniform spot size	100, 160, 254 mm	1064 nm High Power	108

Product Type	Design	TWD @ 633 nm	Expansion Ratio	Operating Conditions	Page
Laser Beam Expander					
HIGH POWER UV	All FS best form lenses 248 nm design wavelength	λ/2	2x to 10x 4.0 and 10.0 mm input aperture	UV range User specified AR High Energy	109
HIGH POWER VIS-NIR	All FS best form lenses 1064 nm design wavelength	λ/2	2x to 10x 4.0 and 10.0 mm input aperture	VIS/NIR range User specified AR High Energy	109
DUAL WAVELENGTH	Two Air-spaced glass triplets Achromatized for 1064 and 532 or 633 nm	λ/2	5x 10.0 mm input aperture	532 + 1064 nm (Dual AR) or 633 – 1064 nm (BBAR) High Energy	111
STANDARD	Glass singlets and doublets Non-rotating focusing adjustment	1λ	5x to 20x 1.0 mm input aperture (recommended)	Visible Low Energy	112

Product Type	Diameter Range	Fringe Rotation Sensitivity	Operating Conditions	Page
Shear-Plate Collimation Testers				
SHEAR-PLATES	5 to 85 mm	59 to 147 µrad	Visible Light	113

CVI Laser Optics

LASER-GRADE VISIBLE CEMENTED ACHROMATS

Laser-grade achromat lenses are manufactured to tighter focal length tolerances and have better surface quality than AAP and LAO Series lenses.

- Computer optimized for infinite conjugate ratio
- Designed for excellent paraxial performance
- Chromatism correction, with minimal spherical aberration and coma
- Recommended for use in manipulating and focusing of low-to moderate-power laser beams
- 20-10 scratch and dig surface quality to reduce scatter and stray light reflections
- Lead-free crown and flint glasses
- Broadband 415 – 700 nm AR coating included

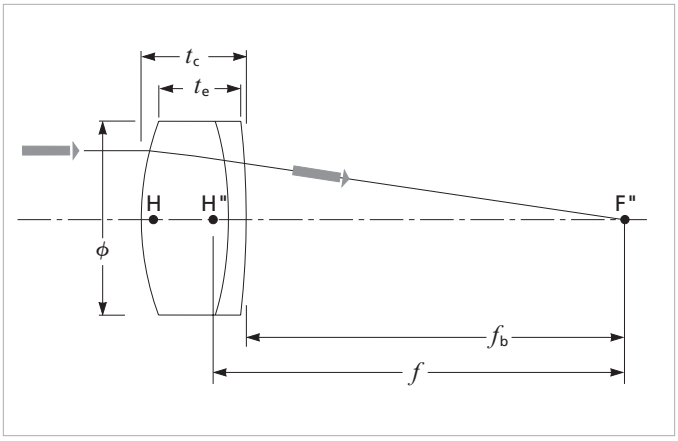

Laser-grade visible cemented achromats

Specifications

Product Code: LAL

Optical Materials: N-BAK4 and N-SF10

Design Wavelengths: 486.1 nm (blue), 589.0 nm (yellow), and 656.3 nm (red)

Clear Aperture (CA): ≥ 90% of central diameter

Surface Quality: 20-10 scratch and dig

Surface Irregularity, $f/\# < 3.0$: < λ/2 p-v over CA at 546.1 nm

Surface Irregularity, $f/\# \geq 3.0$: < λ/4 p-v over CA at 546.1 nm

Paraxial Focal Length: f±1% at 589.0 nm

Diameter: Ø+0/–0.15 mm

Center Thickness (mm): tc±0.25 mm

Chamfer: 0.25 – 0.50 mm at max FW at 45° ±-15°

Centration: ≤ 3 arc minutes

Cement: Ultraviolet-cured synthetic polyester

Maximum Storage Temperature: 90°C (cement limitation)

Correct Orientation: The most steeply curved (shortest radius) surface should face the infinite conjugate

Antireflection Coating: Ravg ≤ 0.5% per surface, 415 – 700 nm

Standard Coated Products

f (mm)	Ø (mm)	f/#	t_c (mm)	t_e (mm)	f_b (mm)	PART NUMBER
Laser-Grade Visible Cemented Achromats						
15.0	7.5	2.2	4.8	3.7	12.7	LAL-15.0-7.5
20.0	10.0	2.2	5.9	4.5	17.2	LAL-20.0-10.0
25.0	12.0	2.3	5.8	4.1	22.2	LAL-25.0-12.0
30.0	12.0	2.8	5.8	4.5	27.3	LAL-30.0-12.0
40.0	15.0	3.0	7.0	5.4	36.8	LAL-40.0-15.0
50.0	20.0	2.8	7.8	5.6	46.3	LAL-50.0-20.0

IDEX OPTICS & PHOTONICS MARKETPLACE

CVI Laser Optics

PRECISION-GRADE VISIBLE CEMENTED ACHROMATS

These achromats offer good wavefront quality for diameters up to 4" together with 40-20 surface quality to minimize scattered light. They are ideal for imaging and low-power laser applications.

- Infinite conjugate design
- Lead-free crown and flint glasses
- Broadband 425 – 675 nm AR coating included
- See the HAP/HAN and YAP/YAN Laser Achromats for 1064 nm and 633 – 1064 nm air-spaced designs

Specifications

Product Code: AAP

Optical Materials: N-BK7 and N-SF2

Design Wavelengths: 486.1 nm, 587.6 nm and 656.3 nm

Field of View: ±2°

Clear Aperture (CA): ≥ 85% of central diameter

Surface Quality: 40-20 scratch and dig

Diameter: Ø±0.25 mm

Antireflection Coating: Ravg ≤ 0.5%, 425 – 675 nm

Damage Threshold
Pulsed: 500 mJ/cm2, 20 nsec, 20 Hz @ 515 nm
cw: 100 W/cm2 @ 515 nm

Transmitted Wavefront Distortion: λ/2 p-v over CA at 633 nm

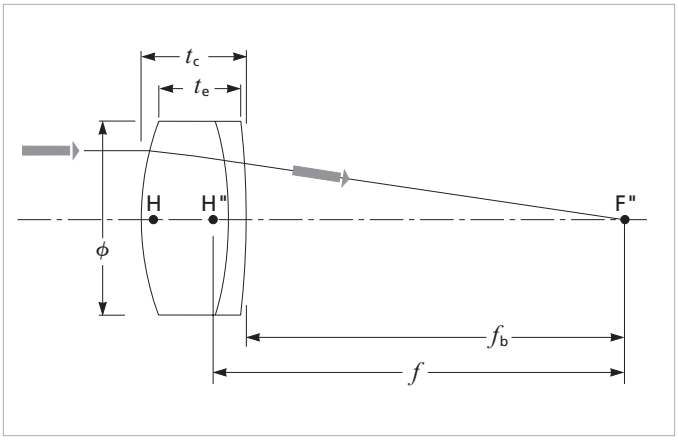

Precision-Grade Visible Cemented Achromats

Standard Coated Products

f (mm)	Ø (mm)	f/#	t_c (mm)	PART NUMBER
Precision-Grade Visible Cemented Achromats				
125.0	25.4	5.8	9.0	AAP-125.0-25.4-425-675
150.0	25.4	6.9	8.0	AAP-150.0-25.4-425-675
250.0	25.4	11.6	7.0	AAP-250.0-25.4-425-675
250.0	50.8	5.8	13.0	AAP-250.0-50.8-425-675
300.0	50.8	6.9	13.0	AAP-300.0-50.8-425-675
500.0	50.8	11.6	12.0	AAP-500.0-50.8-425-675
500.0	101.6	5.8	23.0	AAP-500.0-101.6-425-675
1000.0	101.6	11.6	30.0	AAP-1000.0-101.6-425-675
1500.0	50.8	34.7	16.0	AAP-1500.0-50.8-425-675

STANDARD 400 – 700 nm CEMENTED ACHROMATS

These achromats are available in a wide range of focal lengths ranging from 10 to 600 mm. The design is balanced for good correction of chromatic and spherical aberrations and coma, to provide a superior yet affordable alternative to singlet lenses. These achromatic doublets are useful for broadband applications accross the visible wavelength range. They are also ideal for use at single wavelength at f-numbers where singlets fail due to spherical aberration, in particular for low power laser beam manipulation.

- Optimized for minimum chromatism, spherical aberration and coma
- Lead-free crown and flint glasses
- Broadband SLMF-400-700 coating included

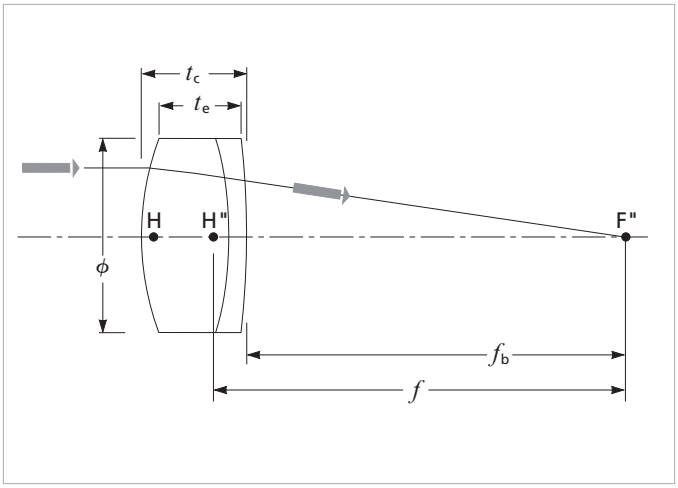

Standard 400 – 700 nm cemented achromats

Specifications

Product Code: LAO

Optical Materials: N-BAK4, N-SF10, N-BK7, N-SF5, N-SF8, N-BAK1, or N-SK11 glass

Design Wavelength:, 480.0 nm (blue), 546.1 nm (green), 643.8 nm (red)

Clear Aperture (CA): ≥ 90% of central diameter

Surface Quality: 60-40 scratch and dig

Surface Irregularity, $f/\# < 3.0$: λ/2 p-v over CA at 633 nm

Surface Irregulary, $f/\# \geq 3.0$: λ/4 p-v over CA at 633 nm

Paraxial Focal Length: f ±2% at 546.1 nm

Diameter: Ø+0/–0.15 mm

Center Thickness (mm): t_c ±0.25 mm

Chamfer: 0.25 – 0.50 mm max FW at 45° ±15°Centration: ≤ 3 arc minutes

Cement: Ultraviolet-cured synthetic polyester

Maximum Storage Temperature: 90°C (cement limitation)

Correct Orientation: The most steeply curved (shortest radius) surface should face the infinite conjugate

Antireflection Coating: Single layer MgF_2 (400 – 700 nm)

Standard Coated Products

f (mm)	Ø (mm)	f/#	t_c (mm)	t_e (mm)	f_b (mm)	PART NUMBER
Standard 400 – 700 nm Cemented Achromats						
10.0	6.0	1.9	4.4	3.3	7.6	LAO-10.0-6.0
12.0	7.0	1.9	4.7	3.5	9.2	LAO-12.0-7.0
16.0	8.0	2.2	4.9	3.8	13.6	LAO-16.0-8.0
20.0	10.0	2.2	5.9	4.5	17.2	LAO-20.0-10.0
20.0	12.5	1.8	7.0	4.7	16.2	LAO-20.0-12.5
21.0	14.0	1.7	8.1	5.4	16.6	LAO-21.0-14.0
25.0	8.0	3.5	5.1	4.4	22.6	LAO-25.0-8.0
25.0	12.0	2.3	5.8	4.1	22.1	LAO-25.0-12.0
25.0	12.5	2.2	5.5	3.7	22.1	LAO-25.0-12.5
30.0	8.0	4.2	4.5	3.9	27.9	LAO-30.0-8.0
30.0	12.5	2.7	5.3	3.9	27.3	LAO-30.0-12.5
31.1	17.5	2.0	8.9	6.1	26.7	LAO-31.1-17.5
36.0	16.0	2.5	6.9	4.9	32.7	LAO-36.0-16.0
37.5	25.0	1.7	15.0	10.1	29.4	LAO-37.5-25.0
40.0	18.0	2.5	8.0	5.8	36.0	LAO-40.0-18.0
40.5	13.0	3.5	4.6	3.5	38.1	LAO-40.5-13.0
44.0	14.0	3.5	5.2	4.0	41.4	LAO-44.0-14.0
48.0	16.0	3.3	5.2	3.7	45.4	LAO-48.0-16.0
50.0	12.5	4.4	5.0	4.1	47.6	LAO-50.0-12.5
50.0	18.0	3.1	6.0	4.2	46.9	LAO-50.0-18.0
50.0	25.0	2.2	11.5	8.0	44.0	LAO-50.0-25.0
56.0	19.0	3.3	5.9	4.2	52.9	LAO-56.0-19.0
60.0	18.0	3.7	5.2	3.7	57.6	LAO-60.0-18.0
60.0	30.0	2.2	12.5	8.4	53.5	LAO-60.0-30.0
65.0	25.0	2.9	8.0	5.3	60.6	LAO-65.0-25.0
73.0	17.0	4.8	5.2	4.1	70.5	LAO-73.0-17.0
75.0	25.0	3.3	7.0	4.7	71.5	LAO-75.0-25.0
80.0	18.0	4.9	5.2	4.1	77.5	LAO-80.0-18.0
80.0	31.5	2.8	9.5	6.1	75.2	LAO-80.0-31.5
90.0	19.0	5.3	5.5	4.4	87.3	LAO-90.0-19.0

f (mm)	Ø (mm)	f/#	t_c (mm)	t_e (mm)	f_b (mm)	PART NUMBER
Standard 400 – 700 nm Cemented Achromats, continued						
90.0	25.0	4.0	6.5	4.4	86.9	LAO-90.0-25.0
100.0	26.5	4.2	6.8	4.9	96.5	LAO-100.0-26.5
100.0	30.0	3.7	8.7	6.3	95.5	LAO-100.0-30.0
100.1	50.0	2.2	17.5	10.5	91.2	LAO-100.1-50.0
120.0	24.0	5.6	5.5	4.2	117.4	LAO-120.0-24.0
120.0	30.0	4.4	10.7	8.4	115.3	LAO-120.0-30.0
120.0	40.0	3.3	11.2	7.6	114.3	LAO-120.0-40.0
140.0	30.0	5.2	9.0	7.1	136.0	LAO-140.0-30.0
148.0	19.0	8.7	4.6	4.0	145.7	LAO-148.0-19.0
150.0	25.0	6.7	6.2	5.1	146.7	LAO-150.0-25.0
150.0	50.0	3.3	12.5	7.9	143.0	LAO-150.0-50.0
160.0	30.0	5.9	6.5	5.0	156.9	LAO-160.0-30.0
160.0	40.0	4.4	9.4	6.8	155.2	LAO-160.0-40.0
175.0	25.0	7.8	5.5	4.4	172.4	LAO-175.0-25.0
180.0	30.0	6.7	8.1	6.6	176.6	LAO-180.0-30.0
180.0	40.0	5.0	9.6	7.3	175.4	LAO-180.0-40.0
190.0	19.0	11.1	6.0	5.5	187.5	LAO-190.0-19.0
200.0	25.0	8.9	6.5	5.6	197.1	LAO-200.0-25.0
200.0	31.5	7.1	8.1	6.8	196.3	LAO-200.0-31.5
200.0	40.0	5.6	10.6	8.2	194.6	LAO-200.0-40.0
200.0	50.0	4.4	12.5	8.7	193.9	LAO-200.0-50.0
250.0	25.0	11.1	6.3	5.6	247.3	LAO-250.0-25.0
250.0	30.0	9.3	7.2	6.3	246.5	LAO-250.0-30.0
250.0	50.0	5.6	12.8	10.2	243.1	LAO-250.0-50.0
300.0	25.0	13.3	5.5	4.9	297.7	LAO-300.0-25.0
300.0	50.0	6.7	14.7	12.5	293.2	LAO-300.0-50.0
300.0	82.0	4.1	19.6	13.7	290.6	LAO-300.0-82.0
350.0	25.0	15.6	5.5	5.0	347.8	LAO-350.0-25.0
400.0	50.0	8.9	11.0	9.1	396.0	LAO-400.0-50.0
500.0	50.0	11.1	10.0	8.5	494.8	LAO-500.0-50.0
600.0	50.0	13.3	10.0	8.8	595.7	LAO-600.0-50.0

IDEX OPTICS & PHOTONICS MARKETPLACE

CVI Laser Optics

1064/633 nm AIR-SPACED LASER ACHROMATS

These air-spaced triplets are achromatized for 1064 nm and 633 nm. They can be used to focus an Nd:YAG beam and a HeNe beam to align to the same point or to form beam expanders that concurrently expand both beams. They also offer excellent achromatic performance and wavefront quality for Ti:Sapphire at 800 nm.

These laser achromats are corrected for spherical aberration at 1064 nm and 633 nm and for coma at 1064 nm. Because they are air-spaced, they are suitable for high-power applications that would cause cemented achromats to fail.

The broadband antireflection coating provides low reflection losses from 633 nm to 1064 nm. Uncoated reflections can be as much as 4% per surface on N-BK7 elements and 8% per surface on N-SF11 elements.

- Achromatic triplet for 1064 nm and 633 nm
- Dual wavelength beamsteering applications
- Excellent achromatic performance for Ti:Sapphire at 800nm
- Air-spaced design for high-energy laser applications
- All surfaces AR coated for 633 – 1064 nm wavelength range

Specifications

Product Code: HAN • HAP

Optical Materials: N-BK7 and N-SF11

Surface Quality: 40-20 scratch and dig

Housing Tolerance: ±0.13 mm

Antireflection Coating: $R_{avg} \leq 0.5\%$, per surface at 633 – 1064 nm on the N-BK7 lens; $R_{avg} \leq 0.75\%$ per surface at 633 – 1064 nm on the N-SF11 lenses

Damage Threshold: 4 J/cm², 20 nsec, 20 Hz @ 1064 nm

Transmitted Wavefront Distortion: λ/2 p-v over 95% of clear aperture at 633 nm

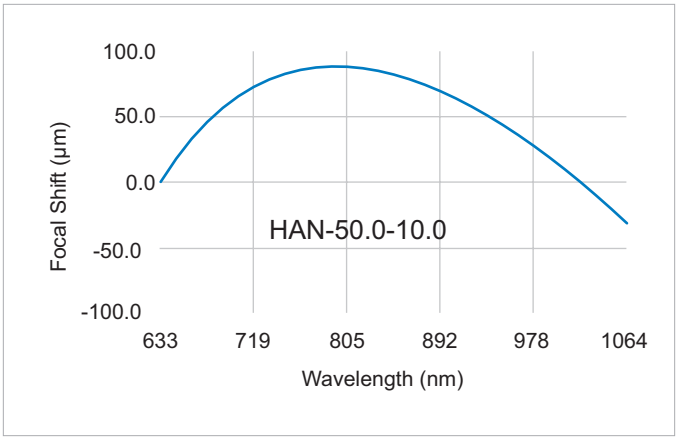

Chromatic focal shift vs. wavelength for HAN-50.0-10.0-633-1064 achromat

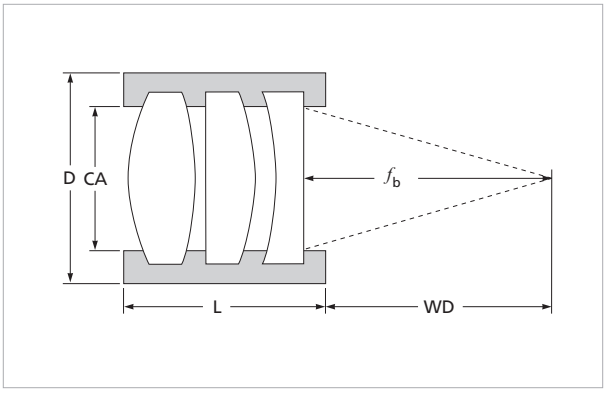

HAP series positive laser achromats

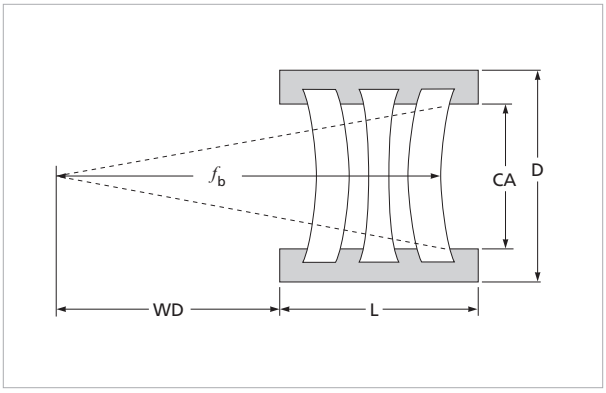

HAN series negative laser achromats

Available Products

f (mm)	f_b (mm)	WD (mm)	D (mm)	L (mm)	CA (mm)	AR Coating Range (nm)	PART NUMBER
1064/633 nm Air-Spaced Laser Achromats, Positive							
100.0	93.3	90.1	28.6	14.4	20.0	633-1064	HAP-100.0-20.0-633-1064
200.0	190.6	184.0	50.8	22.4	40.0	633-1064	HAP-200.0-40.0-633-1064
250.0	239.6	233.0	61.3	24.7	50.0	633-1064	HAP-250.0-50.0-633-1064
1064/633 nm Air-Spaced Laser Achromats, Negative							
–50.0	–54.1	57.0	19.0	16.9	10.0	633-1064	HAN-50.0-10.0-633-1064

IDEX OPTICS & PHOTONICS MARKETPLACE

CVI Laser Optics

1064/532 nm AIR-SPACED LASER ACHROMATS

These air-spaced triplets are designed to have the same focal length at 1064 nm and 532 nm. They are ideal for focusing of dual wavelength, high power Nd:YAG lasers. They are corrected for spherical aberration at both wavelengths, and for coma at 1064 nm, with double V-coat AR coatings on all surfaces to minimize reflection losses.

The achromatic design offer high wavefront quality at 1064 and 532 nm. The OPD fans are shown below for the YAP-100.0-20.0-1064/532 at the best common focus. Both wavelengths are theoretically less than λ//20 p-v transmitted wavefront distortion.

- Air-spaced design for high-energy laser applications
- Dual antireflection V-coatings at 1064 nm and 532 nm

Specifications

Product Code: YAN • YAP

Optical Materials: N-BK7 and N-SF11

Surface Quality: 40-20 scratch and dig

Housing Tolerance: ±0.13 mm

Antireflection Coating: R < 0.3% per surface at 1064 nm and R< 0.6% per surface at 532 nm

Damage Threshold: 4 J/cm^2, 20 nsec 20 Hz @ 1064nm

Transmitted Wavefront Distortion: λ/2 p-v over 95% of clear aperture at 633 nm

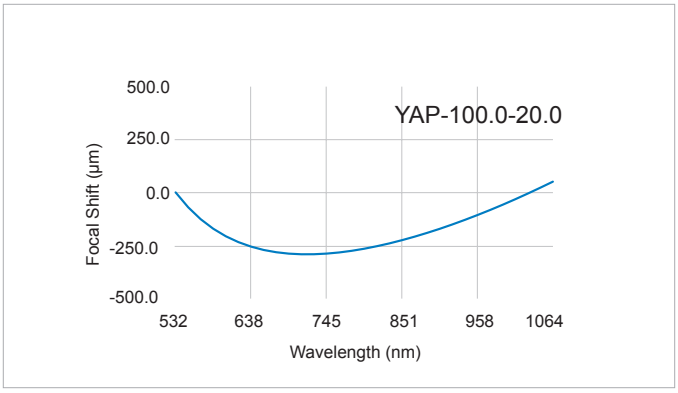

Chromatic focal shift vs. wavelength for YAP-100.0-20.0-1064/532 achromat

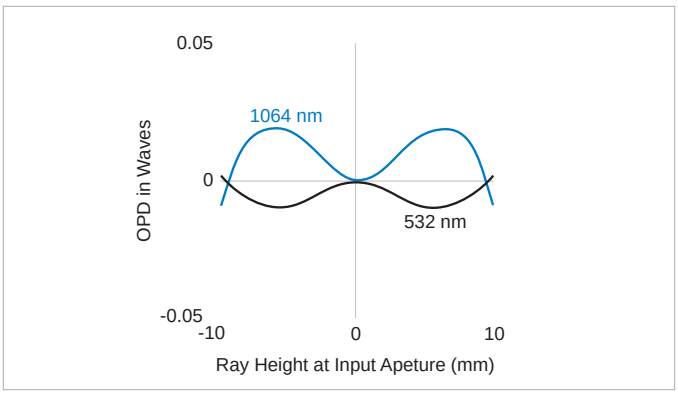

OPD fan for YAP-100.0-20.0-1064/532 achromat

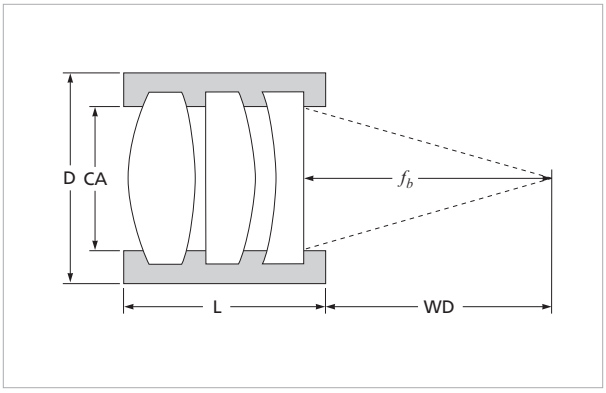

YAP series positive laser achromats

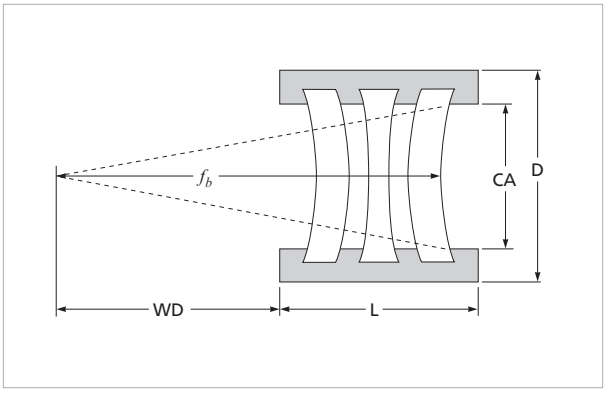

YAN series negative laser achromats

Available Products

f (mm)	f_b (mm)	WD (mm)	D (mm)	L (mm)	CA (mm)	AR Coating Wavelengths (nm)	PART NUMBER
1064/532 nm Air-Spaced Laser Achromats, Positive							
50.0	45.6	41.0	19.0	11.8	10.0	1064/532	YAP-50.0-10.0-1064/532
75.0	68.9	65.0	25.4	14.7	15.0	1064/532	YAP-75.0-15.0-1064/532
100.0	94.2	89.0	28.6	14.4	20.0	1064/532	YAP-100.0-20.0-1064/532
150.0	142.4	136.0	40.6	19.0	30.0	1064/532	YAP-150.0-30.0-1064/532
200.0	190.6	184.0	50.8	22.4	40.0	1064/532	YAP-200.0-40.0-1064/532
250.0	239.1	233.0	61.3	22.7	50.0	1064/532	YAP-250.0-50.0-1064/532
1064/532 nm Air-Spaced Laser Achromats, Negative							
–50.0	–52.2	55.0	19.0	19.3	10.0	1064/532	YAN-50.0-10.0-1064/532

IDEX OPTICS & PHOTONICS MARKETPLACE

CVI Laser Optics

VISIBLE LASER APLANATS

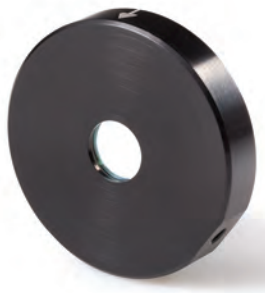

These aplanats are corrected for spherical aberration and coma, offering essentially diffraction-limited performance over their full f/5 aperture. They are ideal for general purpose use in the visible and near-IR regions to focus collimated near monochromatic laser beams. Parts are marked with an arrow on the barrel that points to the collimated light side. For energies above 4 J/cm2 or for UV applications, the LAPQ are recommended.

- Applications: beam handling, interferometers, material ablation & cutting systems
- Air-spaced design for medium to high energy applications
- Diffraction-limited performance
- Mounts easily onto post with 8-32 and M4 x 0.7 tap

Specifications

Product Code: LAP

Optical Material: N-SF11 glass

Design Wavelength: 633 nm

Surface Quality: 40-20 scratch and dig

Housing Tolerance: ±0.13 mm

Antireflection Coating: Wavelength user specified
Narrowband: R ≤ 0.25% per surface
Broadband: R_{avg} ≤ 0.75% per surface

Damage Threshold: 4 J/cm², 20 nsec, 20 Hz @ 1064nm

Transmitted Wavefront Distortion: λ/4 p-v over 95% of clear aperture at 633 nm

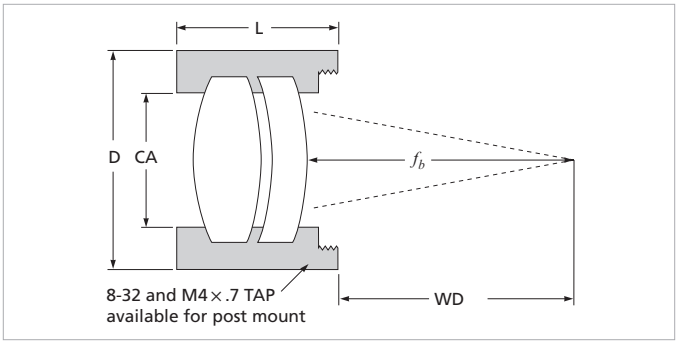

LAP visible laser aplanat in post mount housing

Lens Selection - Choose your PART NUMBER

f (mm)	CA (mm)	WD (mm)	f_b (mm)	D (mm)	L (mm)	PART NUMBER
50.0	10.0	42.9	47.2	50.8	10.2	LAP-50.0-10.0-PM
75.0	15.0	65.1	71.8	50.8	12.7	LAP-75.0-15.0-PM
100.0	20.0	87.8	97.0	50.8	15.9	LAP-100.0-20.0-PM
125.0	25.0	114.1	120.1	50.8	15.9	LAP-125.0-25.0-PM
150.0	30.0	139.0	145.0	76.2	15.9	LAP-150.0-30.0-PM
200.0	40.0	185.2	192.2	76.2	22.2	LAP-200.0-40.0-PM
250.0	50.0	222.5	230.3	76.2	25.4	LAP-250.0-50.0-PM
300.0	60.0	281.8	286.2	101.6	30.5	LAP-300.0-60.0-PM
500.0	100.0	472.2	458.0	127.0	44.5	LAP-500.0-100.0-PM

Semi Custom

Choose the AR coating to complete your part number

YOUR CUSTOM PART NUMBER LAP-50.0-10.0 — 1064 — PM

WAVELENGTH OF AR COATING (nm)

425-675	633	800	1050-1600	1550
532	633-1064	1030	1064	

CVI Laser Optics

APLANATIC MENISCUS LENSES

These meniscus lenses shorten the focal length of the LAP laser aplanats while maintaining a high degree of correction for spherical aberration and coma. APM lenses must be used with their companion LAP to ensure proper matching of wavefronts. They can be ordered with their companion aplanats or separately, giving you the ability to change the focal length of an existing system at a later time. The LAP/APM combination provides an f-number of 3.3 while maintaining an optimized beam quality for use at single wavelengths in the visible and near-infrared.

- Use in combination with companion LAP lens to obtain f/3.3 relative aperture
- Mounts easily onto post with 8-32 and M4 x 0.7 tap with companion LAP lens

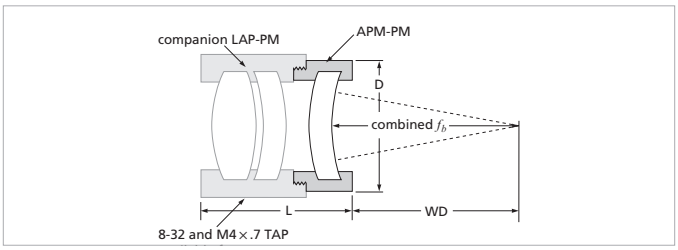

APM aplanatic meniscus lens in post mount housing

Specifications

Product Code: APM

Optical Material: N-BK7 glass

Design Wavelength: 633 nm

Surface Quality: 40-20 scratch and dig

Housing Tolerance: ±0.13 mm

Antireflection Coating: Wavelength user specified`
Narrowband: R ≤ 0.25% per surface
Broadband: R_{avg} ≤ 0.5% per surface

Damage Threshold: 4 J/cm^2, 20 nsec, 20 Hz @ 1064 nm

Transmitted Wavefront Distortion: λ/2 p-v over 95% of clear aperture at 633 nm

Lens Selection

f (combined) (mm)	f_b (combined) (mm)	WD (mm)	D (mm)	L (mm)	CA (mm)	Companion Lens	PART NUMBER
Choose your PART NUMBER							
51.0	41.5	38.2	38.1	16.0	15.0	LAP-75.0-15.0-PM	APM-75.0-15.0-PM
66.0	52.7	50.2	38.1	24.6	20.0	LAP-100.0-20.0-PM	APM-100.0-20.0-PM
166.0	139.0	137.3	69.9	40.9	50.0	LAP-250.0-50.0-PM	APM-250.0-50.0-PM
198.0	160.0	168.5	85.7	58.2	60.0	LAP-300.0-60.0-PM	APM-300.0-60.0-PM
333.0	287.0	252.7	127.7	57.4	100.0	LAP-500.0-100.0-PM	APM-500.0-100.0-PM

Semi Custom Choose the AR coating to complete your part number

YOUR CUSTOM PART NUMBER APM-75.0-15.0 — 800 — PM

WAVELENGTH OF AR COATING (nm)

425-675	633	800	1050-1600	1550
532	633-1064	1030	1064	

IDEX OPTICS & PHOTONICS MARKETPLACE

HIGH-ENERGY/UV LASER APLANATS

Also used as excimer focusing lenses, aplanats are corrected for spherical aberration and coma. Air-spaced fused silica design provides for significantly higher energy damage threshold performance. Parts are marked with an arrow on the barrel that points to the collimated light side.

- Beam handling, interferometers, material ablation & cutting systems
- Air-spaced fused silica design for high energy or UV applications
- Diffraction limited performance for a single wavelength
- Mounts easily onto post with 8-32 and M4 x 0.7 tap

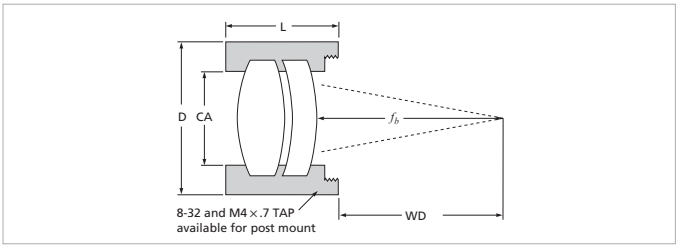

LAPQ positive high energy/UV laser aplanat in post mount housing

Specifications

Product Code: LAPQ

Optical Material: UV-grade fused silica

Design Wavelength: 248 nm

Surface Quality: 10-5 scratch and dig

Housing Tolerance: ±0.13 mm

Antireflection Coating: Wavelength user specified
Narrowband: R ≤ 0.25% per surface
Broadband: R_{avg} ≤ 0.5% per surface

Damage Threshold
Narrowband: 15 J/cm², 20 nsec, 20 Hz @ 1064 nm
Broadband: 10 J/cm², 20 nsec, 20 Hz @ 1064 nm

Transmitted Wavefront Distortion: λ/4 p-v over 95% of clear aperture at 248 nm

Lens Selection

f (mm)	WD (mm)	f_b (mm)	f (mm) at 1064 nm	WD (mm) at 1064 nm	f_b (mm) at 1064 nm	D (mm)	L (mm)	CA (mm)	PART NUMBER
Choose your PART NUMBER									
25.0	22.1	23.0	28.3	25.3	26.2	25.4	8.0	5.0	LAPQ-25.0-5.0-PM
50.0	42.5	47.3	56.4	48.9	53.7	50.8	10.2	10.0	LAPQ-50.0-10.0-PM
75.0	65.1	71.8	84.9	74.8	81.5	50.8	12.7	15.0	LAPQ-75.0-15.0-PM
100.0	87.8	97.0	113.1	100.8	110.0	50.8	15.9	20.0	LAPQ-100.0-20.0-PM
125.0	102.5	108.5	141.3	124.4	134.9	50.8	15.9	25.0	LAPQ-125.0-25.0-PM
200.0	185.2	192.2	226.1	210.9	220.1	76.2	22.2	40.0	LAPQ-200.0-40.0-PM
250.0	222.5	230.3	282.6	254.5	273.0	76.2	25.4	50.0	LAPQ-250.0-50.0-PM
300.0	281.8	286.2	339.2	320.9	325.3	101.6	30.5	60.0	LAPQ-300.0-60.0-PM

Semi Custom Choose the AR coating to complete your part number

YOUR CUSTOM PART NUMBER LAPQ-50.0-10.0 — 266 — PM

WAVELENGTH OF AR COATING (nm)

193	248-355	355	400	415-700	633-1064	800	1064
248	266	355-532	405	532	700-900	1030	1550

CVI Laser Optics

UV APLANATIC MENISCUS LENSES

These meniscus lenses shorten the focal length of the LAPQ laser aplanats for high power/UV applications while maintaining a high degree of correction for spherical aberration and coma. APMQ lenses must be used with their companion LAPQ to ensure proper matching of wavefronts. They can be ordered with their companion aplanats or separately, giving you the ability to change the focal length of an existing system at a later time. The LAPQ/APMQ combination provides an f-number of 3.3 while maintaining an optimized beam quality.

- Use in combination with companion LAPQ lens to obtain f/3.3 relative aperture
- Mounts easily onto post with 8-32 and M4 x 0.7 tap with companion LAPQ lens

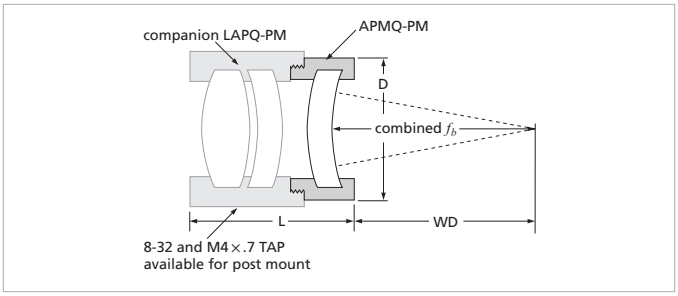

APMQ high energy/UV aplanatic meniscus lens in post mount housing

Specifications

Product Code: APMQ

Optical Material: UV-grade fused silica

Design Wavelength: 248 nm

Surface Quality: 10-5 scratch and dig

Housing Tolerance: ±0.13 mm

Antireflection Coating: Wavelength user specified
Narrowband: R ≤ 0.25% per surface
Broadband: R_{avg} ≤ 0.5% per surface

Damage Threshold
Narrowband: 15 J/cm², 20 nsec, 20 Hz @ 1064 nm
Broadband: 10 J/cm², 20 nsec, 20 Hz @ 1064 nm

Transmitted Wavefront Distortion: λ/2 p-v over 95% of clear aperture at 248 nm

Lens Selection

f (combined) (mm)	f_b (combined) (mm)	WD (mm)	D (mm)	L (mm)	CA (mm)	Companion Lens	PART NUMBER
Choose your PART NUMBER							
50.5	41.5	38.2	38.1	16.0	15.0	LAPQ-75.0-15.0-PM	APMQ-75.0-15.0-PM
66.0	52.7	50.2	38.1	24.6	20.0	LAPQ-100.0-20.0-PM	APMQ-100.0-20.0-PM
160.0	139.0	137.3	69.9	40.9	50.0	LAPQ-250.0-50.0-PM	APMQ-250.0-50.0-PM

Semi Custom Choose the AR coating to complete your part number

YOUR CUSTOM PART NUMBER APMQ-100.0-20.0 — 355 — PM

WAVELENGTH OF AR COATING (nm)

193	248-355	355	400	415-700	633-1064	800	1064
248	266	355-532	405	532	700-900	1030	1550

1-505-298-2550
IDEX OPTICS & PHOTONICS MARKETPLACE

CVI Laser Optics

DIODE LASER GLASS DOUBLETS

These cemented glass doublets have been designed to perform well throughout the entire near-infrared spectrum. Between 780 nm and 1550 nm their operation is diffraction limited; wavefront distortion at 830 nm is less than λ/5.

- Designed for diode laser beam manipulation after collimation and shaping
- Useful for beam focusing and expansion
- Well-corrected for spherical aberration, coma, astigmatism and spherochromatism

Specifications

Product Code: LAI

Optical Materials: N-SK11 and N-SF5

Design Wavelength: 830 nm

Wavelength Range: 780 – 1550 nm

Clear Aperture (CA): ≥ 90% of central diameter

Surface Quality: 60-40 scratch and dig

Paraxial Focal Length: f ±2% at 632.8 nm

Diameter: Ø+0/–0.15 mm

Center Thickness (mm): t_c ±0.25 mm

Chamfer: 0.25 – 0.50 mm max FW at 45° ± 15°

Centration: ≤ 4 arc minutes

Cement: Ultraviolet-cured synthetic polyester

Maximum Storage Temperature:
90° C (cement limitation)

Antireflection Coating: Optional

Transmitted Wavefront Distortion:: <λ/5 p-v at 830 nm over clear aperture

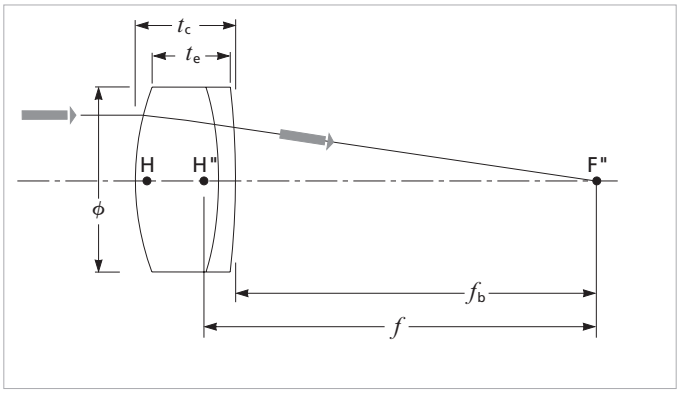

Diode laser glass doublets

APPLICATION NOTE

Focus vs Wavelength

These diode laser doublets are not achromats. Pure chromatic aberration (variation of the focal length with wavelength) has been left uncorrected to provide greater freedoms in other corrections. When used with monochromatic diode lasers this causes no aberration contribution, but means that systems will have to be refocused for use at different diode laser wavelengths.

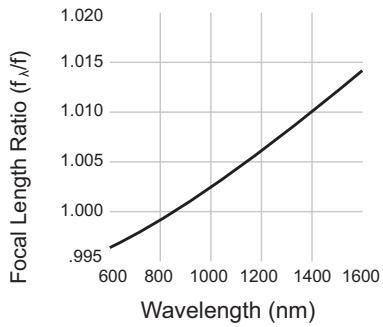

Focal length of diode laser glass doublets as a function of wavelength

Standard Products

f (mm)	Ø (mm)	f 1550 (mm)	f_b (mm)	f_b 1550 (mm)	t_c (mm)	t_e (mm)	f/#	AR Coating Wavelengths (nm)	PART NUMBER
Diode Laser Glass Doublets									
25.0	10.0	25.3	22.4	22.8	5.0	3.9	2.5	Uncoated	LAI-25.0-10.0
25.0	10.0	25.3	22.4	22.8	5.0	3.9	2.5	780-850	LAI-25.0-10.0-HE-780-850
40.0	15.0	40.5	37.2	37.8	5.5	4.0	2.7	Uncoated	LAI-40.0-15.0
40.0	15.0	40.5	37.2	37.8	5.5	4.0	2.7	780-850	LAI-40.0-15.0-HE-780-850
40.0	15.0	40.5	37.2	37.8	5.5	4.0	2.7	1550	LAI-40.0-15.0-1550
60.0	20.0	60.8	56.7	57.4	6.5	4.7	3.0	Uncoated	LAI-60.0-20.0
80.0	25.0	81.0	75.6	76.6	8.5	6.4	3.2	Uncoated	LAI-80.0-25.0
80.0	25.0	81.0	75.6	76.6	8.5	6.4	3.2	780-850	LAI-80.0-25.0-HE-780-850
100.0	30.0	101.3	94.8	96.1	10.0	7.6	3.3	Uncoated	LAI-100.0-30.0
145.0	40.0	146.8	138.5	140.4	12.5	9.5	3.6	Uncoated	LAI-145.0-40.0
190.0	50.0	192.4	183.0	185.5	13.5	10.0	3.8	Uncoated	LAI-190.0-50.0
190.0	50.0	192.4	183.0	185.5	13.5	10.0	3.8	1550	LAI-190.0-50.0-1550

IDEX OPTICS & PHOTONICS MARKETPLACE

Specifications

Product Code: GLC

Housing Material: Black-anodized aluminum

Housing Tolerance: Diameter +0/-0.25mm, Length ±0.25 mm

Paraxial Focal Length: *f* ±2% at the design wavelength

Clear Aperture Tolerance: ±0.5 mm

Focused Spot Radius: Diffraction limited according to Airy disc criterion

Surface Quality:
830 nm parts: 60-40 scratch and dig
405 nm parts: 40-20 scratch and dig

Antireflection Coating:
830 nm parts: Single-layer MgF2 centered at 830 nm
405 nm parts: Multi-layer centered at 405 nm

APPLICATION NOTE

GLC Collimating Lenses

Single-layer MgF^2 coatings are applied to the 830 nm GLC parts because most of the lens elements are made from flint glass. Due to the high refractive index of these glasses, MgF_2 coatings are very efficient. Typically they provide reflectances lower than 0.25% at the design wavelength and less than 1% reflectance at ±10% of the design wavelength.

CVI Laser Optics

COLLIMATING AND FOCUSING LENSES FOR DIODE LASERS

This set of lenses has been designed to be used as either collimating or focusing lenses for diode lasers. The lenses are optimized for specific diode laser wavelengths.

All GLC parts are diffraction limited. The number of elements in each system was chosen to balance cost and performance. Spherical aberration, coma, astigmatism and spherochromatism have been corrected by the design. Both chromatic aberration and field curvature were left uncorrected to allow optimization of other parameters, since neither has any significant effect on these systems when used with diode lasers. Spherochromatism corresponds to the variation of spherical aberration with wavelength, hence allowing one to change wavelength without inducing under or over corrected spherical aberration. Its correction is important as it allows using these lenses at a wide variety of monochromatic wavelengths by simply adjusting the back focal length; changing the wavelength does not induce under or over corrected spherical aberration. Correction of off-axis aberrations permits a reasonable tolerance in setup to compensate for misalignment and decentration in diode lasers.

The GLC Series of objective lenses were designed in various numerical apertures, all having the same clear aperture, so they can be used together in pairs to focus the laser energy to a sharp spot with different diameters and distances from the diode laser.

These lenses are optimized for use without windows. Typical diode laser window thicknesses range from 0.1 to 0.5 mm. If the numerical aperture of the collimating lens system is greater than 0.3, a window contributes an undesirable amount of spherical aberration and will degrade overall system performance. Please call to discuss specifications for GLC lenses to be used with diodes having windows.

- Diffraction limited performance, correction for spherical aberration, coma, astigmatism and spherochromatism
- Same 8.0 mm clear aperture for use in interchangeable pairs to both collimate and refocus the beam to a diffraction limited spot
- The 830 nm GLC parts are corrected for use over the wavelength range from 633 – 1550 nm
- The 405 nm GLC parts are designed for diode lasers in the 395 – 415 nm wavelength range

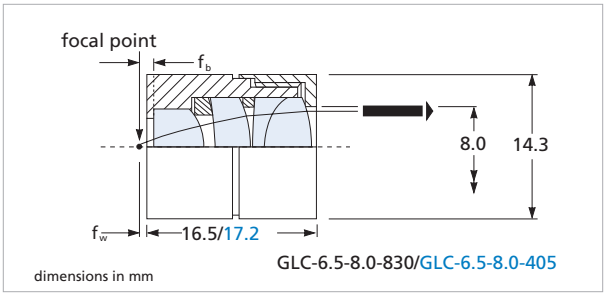

GLC-6.5-8.0-830 / GLC-6.5-8.0-405 collimating lens

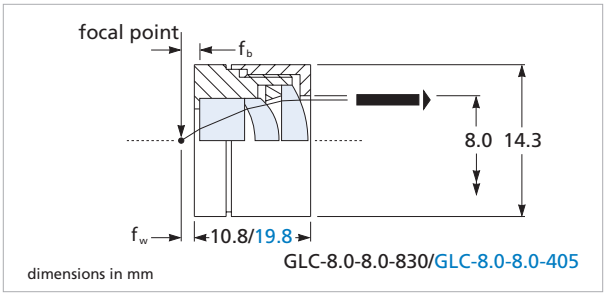

GLC-8.0-8.0-830 / GLC-8.0-8.0-405 collimating lens

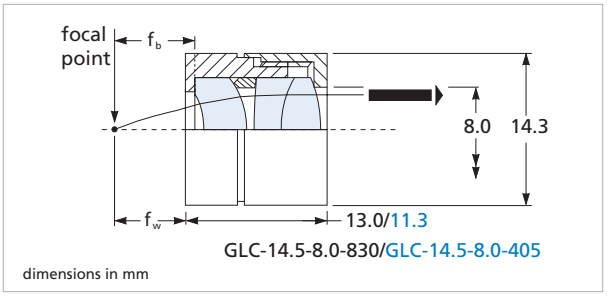

GLC-14.5-8.0-830 / GLC-14.5-8.0-405 collimating lens

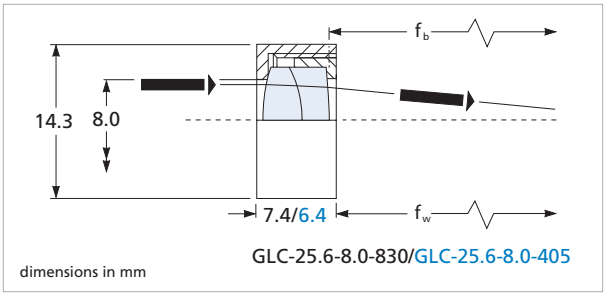

GLC-25.6-8.0-830 / GLC-25.6-8.0-405 focusing lens

Standard Products

f (mm)	Design Wavelength λ_0 (nm)	NA	Field Angular Radius (deg)	Working Distance f_w (mm)	Back Focal Length f_b (mm)	Transmitted Wavefront Error (p-v over clear aperture)	Focused Spot Diameter (µm)	PART NUMBER
Collimating and Focusing Lenses for Diode Lasers, Wavelength Range 395 – 415 nm								
6.5	405	0.62	±0.2	1.5	1.8	λ/4*	0.8	GLC-6.5-8.0-405
8.0	405	0.50	±0.4	1.5	1.9	λ/4*	1.0	GLC-8.0-8.0-405
14.5	405	0.28	±0.5	10.0	10.9	λ/4*	1.8	GLC-14.5-8.0-405
25.6	405	0.16	±0.2	21.9	22.6	λ/4*	3.2	GLC-25.6-8.0-405
Collimating and Focusing Lenses for Diode Lasers, Wavelength Range 633 – 1550 nm								
6.5	830	0.62	±0.7	0.8	1.2	λ/4	1.7	GLC-6.5-8.0-830
8.0	830	0.50	±1.0	1.1	1.6	λ/4	2.0	GLC-8.0-8.0-830
14.5	830	0.28	±1.0	6.7	8.5	λ/4	3.7	GLC-14.5-8.0-830
25.6	830	0.16	±1.0	20.0	22.6	λ/4	6.5	GLC-25.6-8.0-830

* Measured at 633 nm and calculated to 405 nm

IDEX OPTICS & PHOTONICS MARKETPLACE

STANDARD VISIBLE MICROSCOPE OBJECTIVES

- Objectives are color corrected for visual inspection and viewing
- They are ideal for black-and-white microphotography.
- Objectives with magnification of 25x and 40x have a spring loaded (retractable) front end to prevent damage to both the lens and the object in the event of contact during focusing
- Standard objectives can be used to focus laser beams and to construct spatial filters and beam expanders.

These visible microscope objectives are achromatic (i.e., color corrected at 656.3 nm and 486.1 nm) and designed for a 160 mm mechanical tube length, where the image is formed at 150 mm from the objective flange. The nominal magnifications are stated for this finite conjugate configuration, and their tolerance is ±5%.

All OAS objectives are "parfocal", with the same 45 mm distance from the objective mounting flange to the object. This means that objectives of different magnifications can be freely interchanged with only minimal refocusing required.

All optical surfaces are antireflection coated for 400 – 700 nm. The housing, made from brass, has a black finish on all surfaces.

The RMS mounting thread (0.8", 36 TPI) matches the industry standard making these objectives compatible with non-CVI microscopy and fiber coupling accessories. Color coding makes identifying objective power easy when numerical markings cannot be seen.

These objectives are useful both in their traditional application with microscopes as well as for transforming laser beams. A microscope objective is often the best off-the-shelf option for focusing lower power visible lasers.

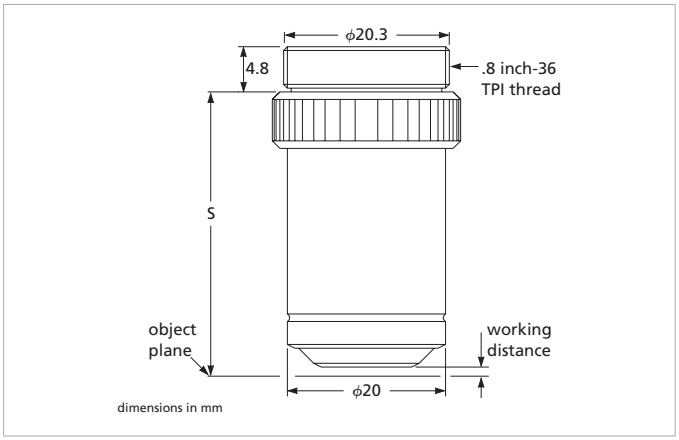

OAS microscope objectives

Standard Products

Power	NA	Working Distance (mm)	Focal Length (mm)	S (mm)	Ring Color	PART NUMBER
Standard Microscope Objectives						
4.0x	0.12	24.00	30.8	45	Red	04OAS006
6.3x	0.20	21.00	22.5	45	Orange	04OAS008
10.0x	0.25	6.80	16.9	45	Yellow	04OAS010
25.0x	0.50	1.30	6.6	45	Dk Green	04OAS014
40.0x	0.65	0.47	4.6	45	Lt Blue	04OAS016

F-THETA LENSES

F-Theta lenses are commonly used in conjunction with galvonometer scanning mirrors in laser marking, engraving, and cutting systems along with Nd:YAG or Fiber Laser Sources. F-Theta lenses provide a flat image field at the plane of interest. Standard features include air-spaced design for high damage threshold, anti-reflection coatings on all surfaces, and M85 x 1 screw threads for easy fixturing.

In addition to the lenses shown below, CVI Laser Optics designs custom lenses for other OEM applications, specifications levels or price ranges. Please contact an Applications Engineer for further information.

- Provides a flat field at the image plane of the scan
- Image velocity is proportional to the angular velocity of the scanning mirror

Specifications

Product Code: FTL

Optical Materials: N-BK7 and N-SF11

Design Wavelength: 1064 nm

Antireflection Coating: R ≤ 0.3% per surface at 1064 nm

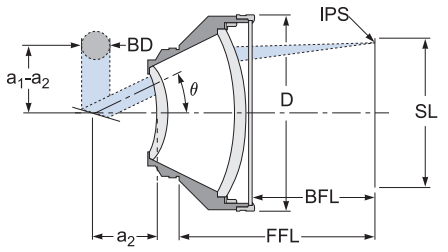

EFL	Effective Focal Length
BFL	Back Focal Length
SL	Scan Length
BD	Input Beam Diameter
IPS	Image Spot Size
D	Assembly Diameter
FFL	Flange Focal Length
θ	Scan Angle (±)

FTL-1064-series F-theta scanning lens

Standard Products

EFL (mm)	BFL (mm)	FFL (mm)	Scan Length (mm)	Input Beam Diameter (mm)	Scan Angle	Image Spot Size (µm)	a_1/a_2 (mm)	Assembly Diameter (mm)	Max Distortion (%)	PART NUMBER
F-Theta Lenses at 1064 nm										
100.0	103.3	102.6	105.0	12.0	30.0°	16*	28/12	90.0	<0.3	FTL-1064-100
160.1	180.8	184.0	149.8	12.0	26.8°	20	28/12	90.0	<1.0	FTL-1064-160
254.4	294.5	345.2	260.2	20.0	29.3°	20	39.5/19.5	128.0	<0.15	FTL-1064-254

* Over 65x65 nm image size

OPTICS & PHOTONICS MARKETPLACE

CVI Laser Optics

HIGH POWER UV AND VIS-NIR BEAM EXPANDERS

Used to increase or decrease the diameter of a beam, these beam expanders use an air spaced, Galilean design in fused silica to achieve high laser damage threshold at UV to near-infrared wavelengths. They are available in a range of magnification ratios with 4.0 or 10.0 mm input aperture.

- Can be used in reverse as a beam condenser
- Mounts easily onto post via ¼-20 thread located on the side of the housing
- Manually adjustable,allowing for collimation at a variety of wavelengths.

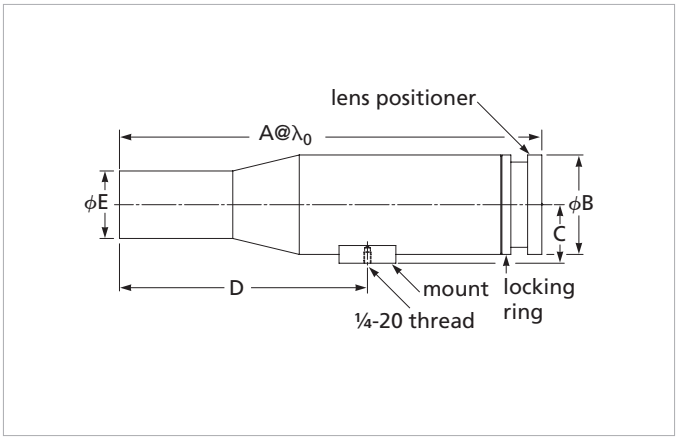

BXUV/HEBX-10.0-10X beam expander

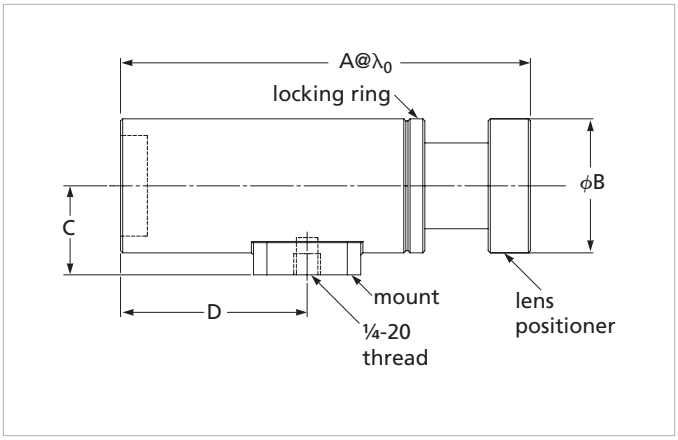

BXUV and HEBX-series beam expanders (except BXUV/HEBX-10.0-10X)

Specifications

Product Code: BXUV • HEBX

Substrate Material: UV-grade fused silica

Design Wavelength BXUV: 266 nm

Design Wavelength HEBX: 1064 nm

Housing Material: Black-anodized aluminum

Housing Tolerance: ±0.005 in.

Antireflection Coating: Wavelength user specified

Transmitted Wavefront Distortion: λ/2 p-v over 85% of clear aperture at 633 nm

Optical Transmission: >97% for BXUV, >98% for HEBX

Damage Threshold
BXUV Narrowband: 6 J/cm^2, 7 nsec @ 266 nm
BXUV Broadband: 5 J/cm^2, 10 nsec @ 532 nm
HEBX Narrowband: 15 J/cm^2, 20 nsec, 20 Hz @ 1064 nm
HEBX Broadband: 10 J/cm^2, 20 nsec, 20 Hz @ 1064 nm

Lens Selection

Input Aperture (mm)	Exit Aperture (mm)	Expansion Ratio	Design Wavelength λ0 (nm)	A @ λ0 (mm)	ØB (mm)	C (mm)	D (mm)	ØE (mm)	PART NUMBER
Choose Your PART NUMBER, BXUV									
4.0	8.0	2x	266	54.6	25.4	18.0	20.1	N/A	BXUV-4.0-2X
4.0	12.0	3x	266	55.6	25.4	18.0	20.1	N/A	BXUV-4.0-3X
4.0	20.0	5x	266	97.1	31.8	21.1	44.2	N/A	BXUV-4.0-5X
4.0	40.0	10x	266	200.1	50.8	30.7	82.6	N/A	BXUV-4.0-10X
10.0	20.0	2x	266	131.5	41.4	26.6	38.1	N/A	BXUV-10.0-2X
10.0	30.0	3x	266	130.3	41.4	26.7	38.1	N/A	BXUV-10.0-3X
10.0	50.0	5x	266	235.2	63.5	37.1	109.2	N/A	BXUV-10.0-5X
10.0	100.0	10x	266	432.0	127.0	73.4	228.8	60.5	BXUV-10.0-10X
Choose Your PART NUMBER, HEBX									
4.0	8.0	2x	1064	47.6	25.4	18.0	20.1	N/A	HEBX-4.0-2X
4.0	12.0	3x	1064	57.9	25.4	18.0	20.1	N/A	HEBX-4.0-3X
4.0	20.0	5x	1064	101.9	31.8	21.1	44.2	N/A	HEBX-4.0-5X
4.0	40.0	10x	1064	210.8	50.8	30.7	82.6	N/A	HEBX-4.0-10X
10.0	20.0	2x	1064	142.8	41.4	26.6	38.1	N/A	HEBX-10.0-2X
10.0	30.0	3x	1064	136.3	41.4	26.7	38.1	N/A	HEBX-10.0-3X
10.0	50.0	5x	1064	247.4	63.5	37.1	109.2	N/A	HEBX-10.0-5X
10.0	100.0	10x	1064	478.3	127.0	73.4	275.1	60.5	HEBX-10.0-10X

Semi Custom Choose the AR coating to complete your part number

YOUR CUSTOM PART NUMBER		
	BXUV-4.0-3X	— 355
	HEBX-4.0-3X	

BXUV, WAVELENGTH OF AR COATING (nm)

193	**248**	**248-355**	**266**	**355**	**355 - 532**	**400**	**405**

HEBX, WAVELENGTH OF AR COATING (nm)

415-700	**532**	**633-1064**	**800**	**1030**	**1050-1600**	**1064**	**1550**

1-505-298-2550

IDEX OPTICS & PHOTONICS MARKETPLACE

DUAL WAVELENGTH Nd:YAG BEAM EXPANDERS

Used to increase or decrease the diameter of a beam, these beam achromatic expanders use an air spaced, compact Galilean design to achieve high laser damage threshold and excellent wavefront quality for two laser wavelengths. They are available for 532/1064 or 633 – 1064 nm use.

The 1064/532 nm beam expanders are corrected for 1064 nm and 532 nm, with dual band AR coatings on all surfaces. They can collimate simultaneously Nd:YAG and doubled Nd:YAG laser beams.
The 1064/633 nm beam expanders are corrected for 1064 nm and 633 nm, and supplied with a broadband 633–1064 nm AR coating. They are designed to collimate Nd:YAG and alignment HeNe beams at the same lens spacing. They also offer optimized wavefront quality and achromatic performance for Ti:Sapphire at 800 nm.

- Mounts easily onto post via ¼-20 thread located on the side of the housing

Specifications

Product Code: DWBX

Optical Materials: N-BK7 and N-SF11

Housing Material: Black-anodized aluminum

Housing Tolerance: ±0.005 in.

Antireflection Coating: Wavelength user specified

1064/532: R < 0.3% at 1064 nm; R < 0.6% at 532 nm (per surface)

633-1064: $R_{avg} \leq 0.75\%$, 633–1064 nm (per surface)

Transmitted Wavefront Distortion: λ/2 p-v over 85% of clear aperture at 633 nm

Optical Transmission: >90%

Damage Threshold: 4 J/cm², 20 nsec, 20 Hz @ 1064nm

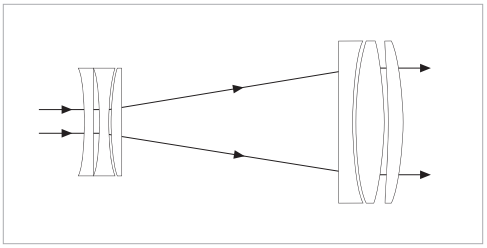

DWBX Galilean design with two air-spaced triplets

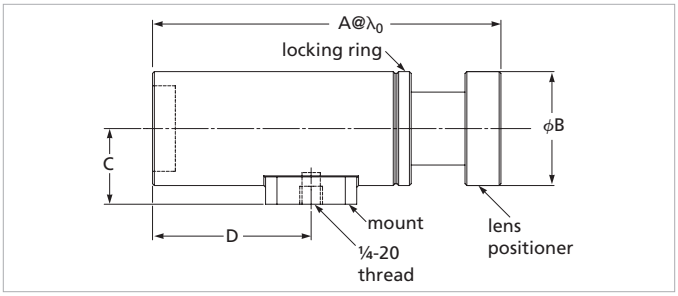

DWBX-series beam expanders

Available Products

Input Aperture (mm)	Exit Aperture (mm)	Expansion Ratio	Design Wavelength λ_0 (nm)	A@ λ_0 (mm)	ØB (mm)	C (mm)	D (mm)	PART NUMBER
Dual Wavelength Nd: YAG Beam Expanders								
10.0	50.0	5x	532/1064	223.0	63.5	31.8	114.8	DWBX-10.0-5X-1064/532
10.0	50.0	5x	633/1064	223.0	63.5	31.8	114.8	DWBX-10.0-5X-633-1064

CVI Laser Optics

STANDARD LASER BEAM EXPANDERS

These beam expanders are a cost-effective solution for illumination of a large area for use at 415 – 700 nm. The compact Galilean design displays less than 1λ of wavefront distortion at 633 nm. They are available in 5x, 10x, and 20x magnification ratios.

- Far-field focusing, non-rotating focus adjustment from 3 m to infinity
- C-mount adaptor ring 09LAR701 included with each beam expander
- Can be directly mounted onto any Melles Griot 44.5 mm diameter cylindrical HeNe laser head with 4-40 on a 36 mm bolt pattern pattern

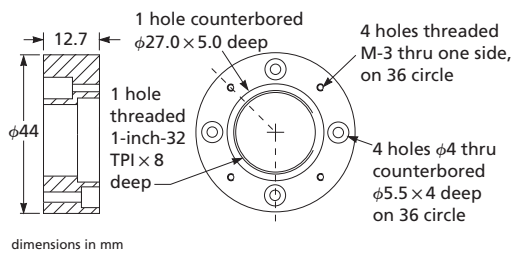

09LAR701 C-Mount Ring

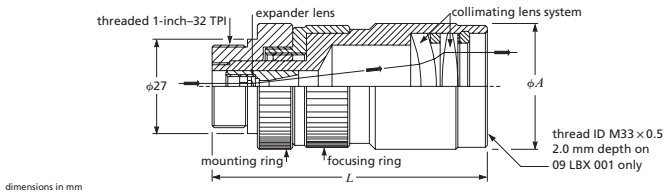

LBX standard laser beam expanders (09LAR701 adaptor ring included)

Specifications

Product Code: LBX

Wavelength Range: 415 – 750 nm

Recommended Maximum Input Beam Diameter ($1/e^2$): 1.0 mm

Input Aperture: 2.5 mm diameter

Wavefront Distortion: <1 λ p-v at 633 nm

Transmission: >95%

Coating: $R_{avg} \leq 0.5\%$, 415 – 700 nm

Housing Material: Black-anodized aluminum

Mounting: 1 inch-32 TPI (C-Mount)

Product Code: LBX

Standard Products

Expansion Ratio	Exit Aperture (mm)	Minimum Focus Distance (m)	Diameter ØA (mm)	Length L (mm)	PART NUMBER
Standard Laser Beam Expanders					
5x	5.0	3.0	38	50	09LBX001
10x	10.0	3.0	39	83	09LBX003
20x	20.0	3.0	47	136	09LBX005

IDEX OPTICS & PHOTONICS MARKETPLACE

Composed of a thick, high quality λ/20 optical flat and viewing screen, these shear plate collimation testers are designed to analyze wavefronts via interferometry. They can be used to adjust the collimation of a laser beam to within 20 µrad, measure the power of long focal length optics, and determine wavefront symmetry or radius of curvature.

- Can be used at any wavelength within the visible spectrum
- Suitable for testing collimation of beam diameters from 5 – 85 mm
- Mounts easily onto post via 1/4-20 or M6 threads located on the bottom of the housing

CVI Laser Optics

SHEAR-PLATE COLLIMATION TESTERS

APPLICATION NOTE

Shear-Plate Theory

A shear plate is a very simple interferometer, using interference between two wavefronts to generate a fringe pattern containing information about the wavefront of the incident beam.

Shear plates are thick, high quality optical flats, generally oriented at 45° to the test beam for maximum sensitivity. Wavefronts reflecting from the front and back uncoated surfaces are said to be "laterally sheared", i.e., offset with respect to one another due to the finite thickness of the plate. Interference occurs in the region where the wavefronts overlap.

The SPM-series use high quality wedged shear plates to produce a gradual path difference between the front and back surface reflections. Consequently, a parallel beam of light produces a linear fringe pattern where the reflections overlap. A beam that is reasonably close to collimation will still produce equally spaced fringes, but they will be rotated.

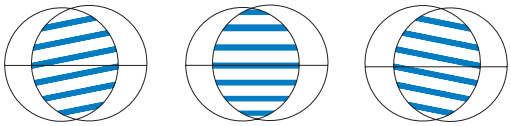

Standard Products

Clear Aperture (mm)	Minimum Usable Beam Diameter (mm)	Fringe Rotation Sensitivity* (±2%) (µrad)	Typical** Collimation Resolution (µrad)	Housing Dimensions (mm)	PART NUMBER
Shear-Plate Collimation Testers					
25	5	147	43	44.5 x 44.5 x 53.8	09SPM001
50	10	87	25	76.2 x 76.2 x 89.2	09SPM003
85	15	59	16	127.0 x 127.0 x 142.2	09SPM005

*Defined as full-angle beam divergence or convergence corresponding to a 10° fringe rotation from collimation at 632.8 nm and a full aperture
**Operator-dependent

MIRRORS

We offer a broad range of mirrors that can satisfy from the most demanding to general use laser applications. When you need to steer a laser beam with an angle of incidence from 0° to 45°, using planar or curved substrates, we have a mirror that will meet your needs. Our Laser Line Dielectric mirrors offer a high damage threshold, are available in partial or high reflecting configurations and are designed for specific laser technology including, but not limited to: Excimer, Gas, High Power Nd:YAG, Nd:YLF, Laser Diode, Diode-pumped solid-state lasers and Ti:Sapphire. With an impressive complement of reflective coatings and substrates, our Laser mirrors can be utilized in the deep UV, down to 190 nm, all the way up to the infrared and 20 µm.

Don't see a mirror configuration that meets your needs? We also offer an extensive range of mirror substrates that can be order in production quantities with a CVI specific coating, or just a substrate uncoated in a wide variety of dimensions and curvatures. Contact inside sales to discuss your needs.

Please see Pg. IV for the Semi Custom Selection Guide.

SELECTION GUIDE 116

LASER LINE DIELECTRIC MIRRORS 118

BROADBAND DIELECTRIC MIRRORS 137

METAL COATED MIRRORS 146

MIRROR SUBSTRATES 153

SELECTION GUIDE

Product Type	Wavelengths	Reflectance	Operating Conditions	Page
Narrow Band Partial Reflecting Mirrors				
HIGH ENERGY PARTIAL REFLECTING LASER MIRRORS	Wavelengths from 190 nm to 2100 nm	Select from page 6.5 Range:10% to 99%	20 J/cm², 20 nsec, 20 Hz @ 1064 nm, 10 MW/cm² @ 1064 nm	118
Narrow Band Laser Line Mirrors				
HIGH POWER TUNABLE LASER LINE MIRRORS	Wavelengths from 190 nm to 2100 nm	R > 97.0% at 190 nm≥λ< 248 nm R > 99.0% at 248 nm≥λ< 355 nm R > 99.5% at 355 nm≥λ≤2100 nm	20 J/cm², 20 nsec, 20 Hz @ 1064 nm, 10 MW/cm² @ 1064 nm	120
FIBER LASER MIRRORS	1030, 1064, 1070, and 1550 nm	See TLM1	20 J/cm², 20 nsec, 20 Hz @ 1064 nm, 10 MW/cm² @ 1064 nm	136
LASER DIODE MIRRORS FOR 0° TO 45° INCIDENCE	670, 780, 980, 1300 and 1550 nm	R > 99.6% at 0° R > 99.0% at 45°	500 mJ/cm², 20 nsec, 20 Hz @ 1064 nm	144
EXCIMER LASER MIRRORS	193	R > 97.0% @ 0° or 45° incidence	3 J/cm², 8 nsec pulse @ 248 nm	122
ND:YLF LASER MIRRORS	209 – 211	R > 97.0% @ 0° or 45° incidence	3 J/cm², 8 nsec pulse @ 248 nm	132
ND:YAG LASER MIRRORS	213	R > 97.0% @ 0° or 45° incidence	3 J/cm², 8 nsec pulse @ 248 nm	127
EXCIMER LASER MIRRORS	248	See TLM1	3 J/cm², 8 nsec pulse @ 248 nm	122
ND:YLF LASER MIRRORS	262 – 263	See TLM1	3 J/cm², 8 nsec pulse @ 248 nm	132
HIGH POWER LOW LOSS ND:YAG LASER MIRRORS	266	R > 99.9% @ 0° or 45°incidence	2 J/cm², 10 nsec, 20 Hz @ 266nm	128
ND:YAG LASER MIRRORS	266	See TLM1	3 J/cm², 8 nsec pulse @ 248 nm	126
ND:YLF LASER MIRRORS	349 – 351	See TLM1	5 J/cm², 10 nsec, 10 Hz @ 355 nm	132
HIGH POWER LOW LOSS ND:YAG LASER MIRRORS	355	R > 99.9% @ 0° or 45°incidence	3 J/cm², 10 nsec, 20 Hz @ 355nm	128
ND:YAG LASER MIRRORS	355	See TLM1	5 J/cm², 10 nsec, 10 Hz @ 355 nm	124
ND:YLF LASER MIRRORS	524 – 527	See TLM1	10 J/cm², 20 nsec, 20 Hz @ 1064 nm	132
HIGH POWER LOW LOSS ND:YAG LASER MIRRORS	532	R > 99.9% @ 0° or 45°incidence	8 J/cm², 10 nsec, 20 Hz @ 532nm	128
ND:YAG LASER MIRRORS	532	See TLM1	10 J/cm², 20 nsec, 20 Hz @ 1064 nm	124
TI:SAPPHIRE/ ULTRAFAST MIRRORS	740 – 860	R > 99.0% from 740-860 nm	8 J/cm², 300 psec, 20 Hz @ 800 nm	134
ND:YLF LASER MIRRORS	1047 – 1053	See TLM1	20 J/cm², 20 nsec, 20 Hz @ 1064 nm	132
HIGH POWER LOW LOSS ND:YAG LASER MIRRORS	1064	R > 99.9% @ 0° or 45°incidence	40 J/cm², 20 nsec,20 Hz @ 1064 nm	128
ND:YAG LASER MIRRORS	1064	See TLM1	20 J/cm², 20 nsec, 20 Hz @ 1064 nm	124
ND:YAG LASER MIRRORS	1319	See TLM1	20 J/cm², 20 nsec, 20 Hz @ 1064 nm	127

IDEX OPTICS & PHOTONICS MARKETPLACE

SELECTION GUIDE

Product Type	Wavelengths	Reflectance	Operating Conditions	Page
Dual Band Laser Line Mirrors				
ND:YAG 1064/532 NM DUAL WAVELENGTH MIRRORS	1064/532	R > 99% at 1064 and 532 nm	8 J/cm², 20 nsec, 20 Hz @ 1064 nm, 3 J/cm², 20 nsec, 20 Hz @ 532 nm	129
ND:YAG 1064/633 NM DUAL WAVELENGTH MIRRORS	1064/633	R > 99% at 1064 nm R > 80% at 633 nm	8 J/cm², 20 nsec pulse @ 1064	130
Specialty Laser Line Mirrors				
DIODE PUMPED RESONATOR MIRRORS	1064/808	R > 99.5% at 1064 nm or R > 99.5% at 1047 – 1053 nm T > 95% at 808 nm	10 J/cm², 20 nsec, 20 Hz @ 1064 nm	131
Broadband Mirrors				
0–45° BROADBAND VIS/NIR MIRRORS	350 – 1100	R_{unp} > 99.0% R_{unp} > 98.0% for 0-45°	1 J/cm², 20 nsec, 20 Hz @ 355 nm	137
TUNABLE BROADBAND MIRRORS	Wavelengths from 450 nm to 2100 nm	R > 99.5% @ 0° incidence R >99.0% @ 45° incidence	500 mJ/cm², 20 nsec, 20 Hz @ 1064 nm	138
MAXBRITE™ BROADBAND MIRRORS	245 – 390	≥ $98\%_{avg}$ from 245 – 390 nm	0.5 J/cm², 10 nsec @ 532 nm	140
MAXBRITE™ BROADBAND MIRRORS	420 – 700	≥ $98\%_{avg}$ from 420 – 700 nm	0.5 J/cm², 10 nsec @ 532 nm	141
MAXBRITE™ BROADBAND MIRRORS	480 – 700	≥ $98\%_{avg}$ from 480 – 700 nm	0.5 J/cm², 10 nsec @ 532 nm	142
MAXBRITE™ BROADBAND MIRRORS	630-850	≥ $98\%_{avg}$ from 630 – 850 nm	0.5 J/cm², 10 nsec @ 532 nm	143
LASER DIODE MIRRORS FOR 0° TO 45° INCIDENCE	670, 780, 980, 1300 and 1550 nm	R > 99.6% at 0° R > 99.0% at 45°	100 mJ/cm², 20 nsec, 20 Hz @ 1064 nm	144
TI:SAPPHIRE/ FEMTOSECOND MIRRORS	740 – 860	R > 99.0% from 740 – 860 nm	8 J/cm², 300 psec, 20 Hz @ 800 nm	134
Metal Coated Mirrors				
VACUUM UV ALUMINUM MIRRORS	157 – 190	R > 85% @ 157 nm	Low Power Applications	146
DEEP UV ALUMINUM MIRRORS	193 – 1200	R > 90% @ 193 nm R_{avg} ≥ 85% @ 400 – 1200 nm	Low Power Applications	147
UV-ENHANCED ALUMINUM MIRRORS	250 – 600	≥ 85% (250 – 600 nm)	Low Power Applications	148
PROTECTED ALUMINUM MIRRORS	400 – 800	≥ 87% (400 – 800 nm)	Low Power Applications	149
ENHANCED ALUMINUM MIRRORS	450 – 650	≥ 92% (450 – 650 nm)	Low Power Applications	150
PROTECTED SILVER MIRRORS	400 – 20,000	≥ 95% (400 nm to 20 µm)	Low Power Applications	151
PROTECTED GOLD MIRRORS	650 – 20,000	≥ 95.5% (650 – 1700 nm) ≥ 98.0% (2 – 16 µm)	Low Power Applications	152

CVI Laser Optics

HIGH ENERGY PARTIAL REFLECTING LASER MIRRORS

Other reflectance values and substrate dimensions available upon request. Standard partial reflectors have an antireflection coating on the second surface.

- Custom reflection options from 10% to 99%
- Contact an applications engineer for OEM options

Specifications

Product Code: PR1

Coating Technology: Electron beam multilayer dielectric

Adhesion and Durability: Per MIL-C-675C. Insoluble in lab solvents.

Clear Aperture: ≥85% of central diameter

Angle of Incidence: 0°

S2 AR Coating: R ≤ 0.25% at center wavelength

Damage Threshold:
Fused Silica - 20 J/cm^2, 20 nsec, 20 Hz @ 1064 nm
N-BK7 - 10 J/cm^2, 20 nsec, 20 Hz @ 1064 nm

Substrate Material: λ <450 nm: UV-grade fused silica
λ ≥450 nm: N-BK7 glass

S1 Surface Figure: λ/10 @ 633 nm before coating

S1 Surface Quality: 10-5 scratch and dig

S2 Surface Figure: λ/10 @ 633 nm before coating

S2 Surface Quality: 10-5 scratch and dig

Transmitted Wavefront

Distortion: λ/10 @ 633 nm before coating

Diameter Tolerance: □ +0/–0.25 mm

Thickness Tolerance: t ±0.25 mm

Wedge: ≤5 arc min

Concentricity: ±0.05 mm

Radius Tolerance: ±0.5%

Standard Products

Wavelength (nm)	Reflectivity	Ø (mm)	t (mm)	PART NUMBER
High Energy Partial Reflecting Laser Mirrors				
193	50%	50.8	9.53	PR1-193-50-2037
248	50%	50.8	9.53	PR1-248-50-2037
355	50%	25.4	6.35	PR1-355-50-1025
532	50%	25.4	6.35	PR1-532-50-1025
532	50%	50.8	9.53	PR1-532-50-2037
633	50%	25.4	6.35	PR1-633-50-1025
800	90%	25.4	6.35	PR1-800-90-1025
800	98%	25.4	6.35	PR1-800-98-1025
800	99%	25.4	6.35	PR1-800-99-1025
1030	50%	25.4	6.35	PR1-1030-50-1025
1064	10%	25.4	6.35	PR1-1064-10-1025
1064	30%	25.4	6.35	PR1-1064-30-1025
1064	50%	25.4	6.35	PR1-1064-50-1025
1064	70%	25.4	6.35	PR1-1064-70-1025
1064	80%	25.4	6.35	PR1-1064-80-1025
1064	90%	25.4	6.35	PR1-1064-90-1025
1064	95%	25.4	6.35	PR1-1064-95-1025
1064	98%	25.4	6.35	PR1-1064-98-1025
1064	99%	25.4	6.35	PR1-1064-99-1025

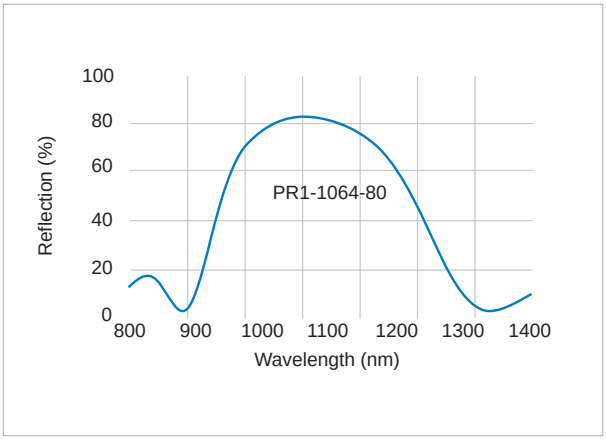

Reflectivity vs wavelength of PR1-1064-80 at 0° incidence angle

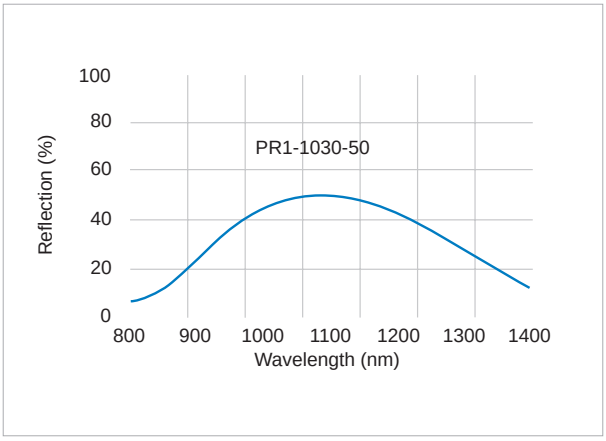

Reflectivity vs wavelength of PR1-1030-50 at 0° incidence angle

Semi Custom Use the selection menu below to build your own part

YOUR CUSTOM PART NUMBER						
PR1	—	800	—	95	—	**1025** for Flat Radius
PR1		800		95		**0525-1.00CC** for Radius
PR1		800		95		**IF-0525-UV** for Wedge

PRODUCT CODE

PR1

CENTER WAVELENGTH (nm)

532	633	780	800	850	1064	1030	1550

REFLECTANCE (%)

30	±5.0	70	±4.0	90	±2.0	98	±1.0
50	±5.0	80	±4.0	95	±1.5	99	±0.5

SIZE CODE	Diameter (mm)	Thickness (mm)	Standard Options
0525	12.7	6.35	Flat, Radius or Wedge
1025	25.4	6.35	Flat, Radius or Wedge
2037	50.8	9.53	Flat, Radius or Wedge

RADIUS OF CURVATURE (m)

SIZE CODE	Diameter (mm)	RADII OPTIONS (m), CC = concave									
0525	12.7	0.050CC	0.075CC	0.10CC	0.15CC	0.20CC	0.25CC	0.50CC	1.00CC		
1025	25.4	0.25CC	0.30CC	0.50CC	0.75CC	1.50CC	1.00CC	2.00CC	3.00CC	5.00CC	10.00CC

WEDGE OPTION (for wedge option omit size and radius of curvature options)

Substrate Part #	Diameter (mm)	Thickness (mm)	Wedge (minutes)	Material
IF-0525-UV	12.7	6.35	30±5	Fused Silica
IF-1025-UV	25.4	6.35	30±5	Fused Silica
IF-2037-UV	50.8	9.53	30±5	Fused Silica

CVI Laser Optics

TUNABLE LASER LINE MIRRORS

For applications at user-specified wavelengths, these single stack, high-damage-threshold mirrors have become the industry standard. Damage threshold can be greater than 20 J/cm^2 depending on such factors as wavelength, pulse width, repetition rate, and exact beam profile.

- High energy dielectric coating
- Other wavelengths and substrates available upon request
- Refer to website for typical bandwidths
- Designed for Pulse Lengths > 130 fs

Specifications

Product Code: TLM1

Coating Technology: Electron beam multilayer dielectric

Adhesion and Durability: Per MIL-C-675C. Insoluble in lab solvents.

Clear Aperture: ≥85% of central diameter

Angle of Incidence: 0° or 45° options

Reflectivity:
Angle of Incidence 0°:
R≥99.0%
Angle of Incidence 45°:
R≥98.5% for *p*-polarization
R≥99.0% for unpolarized
R≥99.5% for *s*-polarization

Damage Threshold:
Pulsed:
3.0 J/cm2, 7 nsec, 20 Hz @ 266 nm
5.0 J/cm^2, 10 nsec, 20 Hz @ 532 nm
0.55 J/cm^2, 50 fsec, 50 Hz @ 800 nm
20 J/cm^2, 20 nsec, 20 Hz @ 1064 nm

Continuous Wave: 10 MW/cm2 @1064 nm

Bandwidth Tolerance: +0/–10% typical

Center Wavelength Tolerance: ±3%

Substrate Material:
λ<450 nm: UV-grade fused silica
λ≥450 nm: N-BK7 glass

S1 Surface Figure: λ/10 @ 633 nm before coating

S1 Surface Quality: 10-5 scratch and dig

S2 Surface Quality: Commercial polish

Concentricity: ≤0.05 mm

Radius Tolerance: ±0.5%

Standard Products

Wavelength (nm)	Incidence Angle	Ø (mm)	t (mm)	Radius of Curvature (m)	PART NUMBER
Standard TLM1 Laser Line Mirrors					
400	0	25.4	6.35	—	TLM1-400-0-1025
400	45	25.4	6.35	—	TLM1-400-45-1025
780	45	25.4	6.35	—	TLM1-780-45-1025
800	0	12.7	6.35	—	TLM1-800-0-0525
800	45	12.7	6.35	—	TLM1-800-45-0525
800	0	25.4	6.35	—	TLM1-800-0-1025
800	45	25.4	6.35	—	TLM1-800-45-1025
800	0	25.4	6.35	0.50CC	TLM1-800-0-1025-0.50CC
800	0	25.4	6.35	1.00CC	TLM1-800-0-1025-1.00CC
800	0	25.4	6.35	0.30CX	TLM1-800-0-1025-0.30CX
800	0	25.4	6.35	0.50CX	TLM1-800-0-1025-0.50CX
800	0	25.4	6.35	1.00CX	TLM1-800-0-1025-1.00CX
800	0	50.8	9.53	—	TLM1-800-0-2037
800	45	50.8	9.53	—	TLM1-800-45-2037
800	45	76.2	12.7	—	TLM1-800-45-3050
800	45	101.6	12.7	—	TLM1-800-45-4050
980	45	25.4	6.35	—	TLM1-980-45-1025
1030	45	25.4	6.35	—	TLM1-1030-45-1025
1550	45	25.4	6.35	—	TLM1-1550-45-1025

IDEX OPTICS & PHOTONICS MARKETPLACE

Semi Custom Use the selection menu below to build your own part

YOUR CUSTOM PART NUMBER TLM1 — 800 — 0 — 1025 — 1.00CC

PRODUCT CODE

TLM1

CENTER WAVELENGTH (nm)

200	405	600	790	980
280	450	750	800	1030
400	488-515	780	850	1550

ANGLE OF INCIDENCE in Degrees

0
45

SIZE CODE	Diameter (nm)	Thickness (nm)	Standard Options
0525	12.7	6.35	Flat or Radius
0725	19.1	6.35	Flat Only
2506M	25.0	6.0	Flat Only
1025	25.4	6.35	Flat or Radius
5010M	50.0	10.0	Flat Only
2037	50.8	9.53	Flat or Radius
3050	76.2	12.7	Flat Only
4050	101.6	12.7	Flat Only

RADIUS OF CURVATURE (m)

SIZE CODE	Diameter (mm)	**RADII OPTIONS** (m), CC = concave					**RADII OPTIONS** (m), CX = convex	
0525	12.7	0.075CC	0.15CC	0.25.CC	1.00CC		1.00CX	
		0.10CC	0.20CC	0.50CC	5.0CC			
1025	25.4	0.25CC	0.50CC	1.00CC	2.00CC	5.00CC	0.30CX	1.00CX
		0.30CC	0.75CC	1.50CC	3.00CC	10.00CC	0.50CX	
2037	50.8	0.50CC	1.00CC	1.50CC	2.00CC			

CVI Laser Optics

EXCIMER LASER MIRRORS

We offer an extensive range of high-quality excimer laser mirrors specifically designed for use with today's high-energy laser applications. Our unique coatings have continued to outperform the industry standards and provide our customers with optics for the most demanding laser environments.

- Contact an applications engineer for OEM optionss

Specifications

Product Code: ARF • KRF

Substrate Material: UV-grade fused silica

S1 Surface Figure: λ/10 @ 633 nm before coating

S1 Surface Quality: 10-5 scratch and dig

S2 Surface Quality: Commercial polish

Diameter Tolerance: Ø +0/-0.25 mm

Thickness Tolerance: t ±0.25 mm

Wedge: ≤5 arc min

Chamfer: 0.35 mm at 45° typical

Concentricity: ≤0.05 mm

Radius Tolerance: ±0.5%

Coating Technology: Electron beam multilayer dielectric

Adhesion and Durability: Per MIL-C-675C. Insoluble in lab solvents.

Clear Aperture: ≥85% of central diameter

Damage Threshold: 3 J/cm^2, 8 nsec pulse @ 248 nm

Center Wavelength: 193 nm

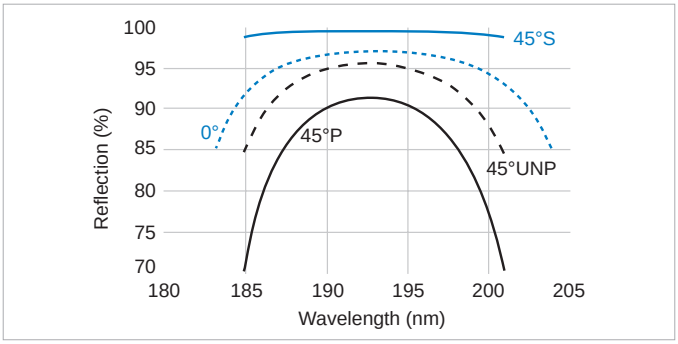

Reflectivity vs wavelength of 193 nm excimer laser mirror for 0° and 45° designs. Minimum reflectance > 97% at 0° and > 96.0% at 45° UNP

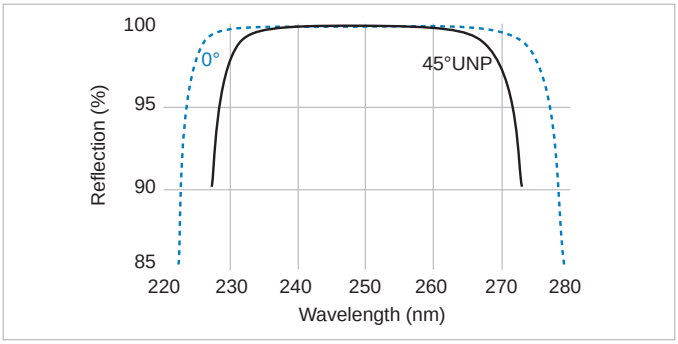

Reflectivity vs wavelength of 248 nm excimer laser mirror for 0° and 45° designs. Minimum reflectance > 99.5% at 0° and > 99.0% at 45° UNP

IDEX OPTICS & PHOTONICS MARKETPLACE

Standard Products

Wavelength (nm)	Incidence Angle	Ø (mm)	t (mm)	PART NUMBER
Standard ArF Excimer Laser Mirrors for 193 nm				
193	45	25.4	6.35	ARF-1025-45
193	45	50.8	9.53	ARF-2037-45
Standard KrF Excimer Laser Mirrors for 248 nm				
248	0	25.4	6.35	KRF-1025-0
248	45	25.4	6.35	KRF-1025-45
248	45	50.8	9.53	KRF-2037-45
248	45	76.2	12.7	KRF-3050-45

Semi Custom Use the selection menu below to build your own part

YOUR CUSTOM PART NUMBER ARF — 1537 — 45

PRODUCT CODE	Laser Type	Wavelength (nm)
ARF	ArF Solid State Excimer Laser	193
KRF	KrF Solid State Excimer Laser	248

SIZE CODE	Diameter (mm)	Thickness (mm)
2506M	25.0	6.0
1025	25.4	6.35
1537	38.1	9.53
5010M	50.8	10.0
2037	50.0	9.53
3050	76.2	12.7

ANGLE OF INCIDENCE in Degrees	
45	degrees

CVI Laser Optics

HIGH POWER ND:YAG LASER MIRRORS

The Y Series of Nd:YAG laser line mirrors utilize durable, dielectric coatings and are readily available in a variety of substrate sizes with curved or flat surfaces.

- Very high damage threshold
- High reflectivity: > 99.5% at 0° incidence for wavelengths 266 nm to 1319 nm. > 97.0 at 0° incidence for wavelength 213 nm
- Flat, convex and concave substrates
- Contact CVI Laser Optics for OEM quantities
- Refer to website for bandwidth

Specifications

Product Code: Y1 • Y2 • Y3 • Y4 • Y5 • Y13

Substrate Material: UV-grade fused silica

S1 Surface Figure: λ/10 @ 633 nm before coating

S1 Surface Quality: 10-5 scratch and dig

S2 Surface Quality: Commercial polish

Diameter Tolerance: Ø +0/–0.25 mm

Thickness Tolerance: t ±0.25 mm

Wedge: ≤5 arc min

Concentricity: ±0.05 mm

Radius Tolerance: ±0.5%

Coating Technology: Electron beam multilayer dielectric

Adhesion and Durability: Per MIL-C-675C. Insoluble in lab solvents.

Clear Aperture: ≥85% of central diameter

Damage Threshold:
Pulsed: 20 J/cm^2, 20 nsec, 20 Hz @ 1064 nm
cw: 10 MW/cm^2 @ 1064 nm

Standard Products 1064 – 355 nm

Wavelength (nm)	Incidence Angle	Ø (mm)	t (mm)	PART NUMBER
High Power Nd:YAG Laser Mirrors for 1064 nm				
1064	45	12.7	6.35	Y1-0525-45
1064	45	19.05	6.35	Y1-0725-45
1064	0	25.0	6.0	Y1-2506M-0
1064	45	25.0	6.0	Y1-2506M-45
1064	0	25.4	6.35	Y1-1025-0
1064	45	25.4	6.35	Y1-1025-45
1064	45	38.1	9.53	Y1-1537-45
1064	45	50.0	10.0	Y1-5010M-45
1064	0	50.8	9.53	Y1-2037-0
1064	45	50.8	9.53	Y1-2037-45
1064	45	76.2	12.7	Y1-3050-45
1064	45	101.6	12.7	Y1-4050-45
High Power Nd:YAG Laser Mirrors for 532 nm				
532	45	12.7	6.35	Y2-0525-45
532	45	19.05	6.35	Y2-0725-45
532	0	25.0	6.0	Y2-2506M-0
532	45	25.0	6.0	Y2-2506M-45
532	0	25.4	6.35	Y2-1025-0
532	45	25.4	6.35	Y2-1025-45
532	45	38.1	9.53	Y2-1537-45
532	45	50.0	10.0	Y2-5010M-45
532	0	50.8	9.53	Y2-2037-0
532	45	50.8	9.53	Y2-2037-45
532	45	76.2	12.7	Y2-3050-45
532	45	101.6	12.7	Y2-4050-45
High Power Nd:YAG Laser Mirrors for 355 nm				
355	45	12.7	6.35	Y3-0525-45
355	45	19.05	6.35	Y3-0725-45
355	45	25.0	6.0	Y3-2506M-45
355	0	25.4	6.35	Y3-1025-0
355	45	25.4	6.35	Y3-1025-45
355	45	38.1	9.53	Y3-1537-45
355	45	50.8	9.53	Y3-2037-45
355	45	76.2	12.7	Y3-3050-45
355	45	101.6	12.7	Y3-4050-45

1-505-298-2550
IDEX OPTICS & PHOTONICS MARKETPLACE

Semi Custom Use the selection menu below to build your own part

YOUR CUSTOM PART NUMBER Y1 — 1025 — 0 — 1.00CC

PRODUCT CODE	Laser Type	Wavelength (nm)
Y1	Nd:YAG	1064
Y2	Nd: YAG second harmonic	532
Y3	Nd:YAG third harmonic	355

SIZE CODE	Diameter (mm)	Thickness (mm)
0525	12.7	6.35
0725	19.1	6.35
2506M	25.0	6.0
1025	25.4	6.35
1537	38.1	9.53
5010M	50.0	10.0
2037	50.8	9.53
3050	76.2	12.7
4050	101.6	12.7

ANGLE OF INCIDENCE in Degrees	
0	Normal incidence
45	45 degrees

SIZE CODE	RADII OPTIONS (m), cc = concave					RADII OPTIONS (m), cx = convex
0525	0.075CC	0.15CC	0.25CC	1.00CC		1.00CX
	0.10CC	0.20CC	0.50CC	5.00CC		
1025	0.25CC	0.50CC	1.00CC	2.00CC	5.00CC	0.50CX
	0.30CC	0.75CC	1.50CC	3.00CC		1.00CX
2037	0.50CC	1.00CC	1.50CC	2.00CC		

Standard Products - 266 nm

Wavelength (nm)	Incidence Angle	Ø (mm)	t (mm)	PART NUMBER
High Power Nd:YAG Laser Mirrors for 266 nm				
266	45	12.7	6.35	Y4-0525-45
266	0	25.4	6.35	Y4-1025-0
266	45	25.4	6.35	Y4-1025-45
266	45	50.8	6.35	Y4-2037-45

Semi Custom Use the selection menu below to build your own part

YOUR CUSTOM PART NUMBER **Y4** — **2506M** — **45**

PRODUCT CODE	Laser Type	Wavelength (nm)
Y4	Nd:YAG fourth harmonic	266

SIZE CODE	Diameter (mm)	Thickness (mm)
0525	12.7	6.35
0725	19.1	6.35
2506M	25.0	6.0
1025	25.4	6.35
1537	38.1	9.53
5010M	50.0	10.0
2037	50,8	9.53
3050	76.2	12.7
4050	101.6	12.7

ANGLE OF INCIDENCE in Degrees	
0	Normal incidence
45	45 degrees

Standard Products - 213 nm

Wavelength (nm)	Incidence Angle	Ø (mm)	t (mm)	PART NUMBER
High Power Nd:YAG Laser Mirrors for 213 nm				
213	45	25.4	6.35	Y5-1025-45

Semi Custom Use the selection menu below to build your own part

YOUR CUSTOM PART NUMBER Y5 — 1025 — 45

PRODUCT CODE	Laser Type	Wavelength (nm)
Y5	Nd:YAG fourth harmonic	266

SIZE CODE	Diameter (mm)	Thickness (mm)
0525	12.7	6.35
2506M	25.0	6.0
1025	25.4	6.35
2037	50.8	9.53

ANGLE OF INCIDENCE in Degrees	
0	Normal incidence
45	45 degrees

Standard Products - 1319 nm

Wavelength (nm)	Incidence Angle	Ø (mm)	t (mm)	PART NUMBER
High Power Nd:YAG Laser Mirrors for 1319 nm				
1319	45	25.4	6.35	Y13-1025-45

CVI Laser Optics

ION BEAM SPUTTERED ND:YAG LASER MIRRORS

- Very high damage threshold
- R >99.9% at 0° or 45° for both *s* & *p*
- Ideal for high-power Nd:YAG and fiber laser applications
- Custom reflectivities to >99.998%
- Contact us about superpolished cavity mirrors or custom coatings

Specifications

Product Code: Y1S • Y2S • Y3S • Y4S

Substrate Material: UV-grade fused silica

S1 Surface Figure: λ/10 at 633 nm before coating

S1 Surface Quality: 10-5 scratch and dig

S2 Surface Quality: Commercial polish

Diameter Tolerance: Ø +0/–0.25 mm

Thickness Tolerance: t ±0.25 mm

Wedge: ≤5 arc min

Chamfer: 0.35 mm at 45° typical

Adhesion and Durability: Per MIL-PRF-13830B

Clear Aperture: ≥85% of central diameter

Angle of Incidence: 0° or 45°

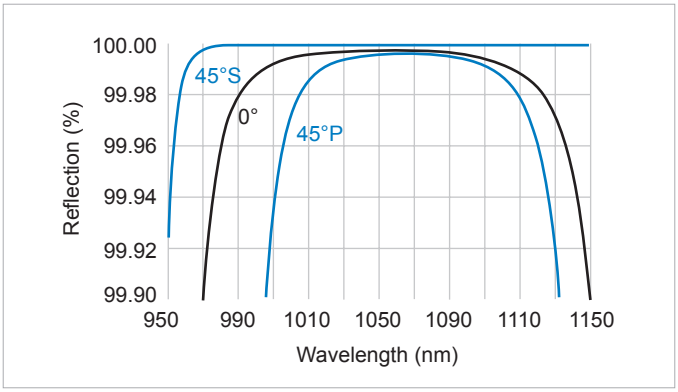

Reflectivity vs wavelength of Y1S low loss Nd:YAG laser mirror at 45° and 0° incidence angle design

Standard Products

Wavelength (nm)	Reflectivity	Incidence Angle	Damage Threshold	Ø (mm)	t (mm)	PART NUMBER
Ion Beam Sputtered Nd:YAG Laser Mirrors						
1064	99.9% at 0°	0°	40 J/cm² @ 1064nm	25.4	6.35	Y1S-1025-0
1064	99.9% at 45° (both *s* & *p*)	45°	40 J/cm² @ 1064nm	25.4	6.35	Y1S-1025-45
532	99.9% at 0°	0°	8 J/cm² @ 532nm	25.4	6.35	Y2S-1025-0
532	99.9% at 45° (both *s* & *p*)	45°	8 J/cm² @ 532nm	25.4	6.35	Y2S-1025-45
355	99.9% at 0°	0°	3 J/cm² @ 355nm	25.4	6.35	Y3S-1025-0
355	99.9% at 45° (both *s* & *p*)	45°	3 J/cm² @ 355nm	25.4	6.35	Y3S-1025-45
266	99.9% at 0°	0°	2 J/cm² @ 266nm	25.4	6.35	Y4S-1025-0
266	99.9% at 45° (both *s* & *p*)	45°	2 J/cm² @ 266nm	25.4	6.35	Y4S-1025-45

IDEX OPTICS & PHOTONICS MARKETPLACE

CVI Laser Optics

ND:YAG 1064/532 nm DUAL WAVELENGTH MIRRORS

HM dielectric wavelength mirrors are designed for high reflectivity and durability at both Nd:YAG and doubled Nd:YAG wavelengths at either 0° or 45°.

- R > 99.0% at 1064 nm and 532 nm
- Incidence angles other than 0° and 45° may be specified
- Other substrate dimensions are available for OEM capabilities

Specifications

Product Code: HM

Substrate Material: N-BK7

S1 Surface Figure: λ/10 at 633 nm before coating

S1 Surface Quality: 10-5 scratch and dig

S2 Surface Quality: Commercial polish

Diameter Tolerance: Ø +0/–0.25 mm

Thickness Tolerance: t ±0.25 mm

Wedge: ≤5 arc min

Chamfer: 0.35 mm at 45° typical

Coating Technology: Electron beam multilayer dielectric

Adhesion and Durability: Per MIL-C-675C. Insoluble in lab solvents.

Clear Aperture: ≥85% of central diameter

Angle of Incidence: 0° or 45°

Damage Threshold: >8 J/cm², 20 nsec, 20 Hz @ 1064 nm, >3 J/cm², 10 nsec, 20 Hz @ 532 nm

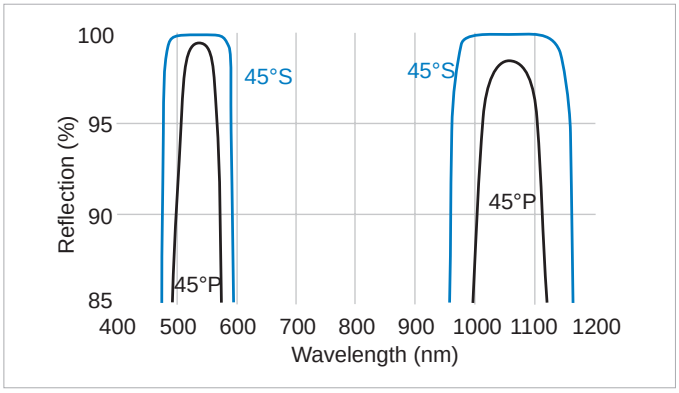

Reflectivity vs wavelength of 1064/532 nm laser mirror HM-2037-45

Standard Products

Wavelength (nm)	Incidence Angle	Ø (mm)	t (mm)	PART NUMBER
Nd:YAG 1064/532 nm Dual Wavelength Mirrors				
1064/532	45°	25.0	6.0	HM-0525-0
1064/532	45°	25.0	6.0	HM-0525-45
1064/532	0°	25.0	6.0	HM-2506M-0
1064/532	45°	25.0	6.0	HM-2506M-45P
1064/532	0°	25.4	6.4	HM-1025-0
1064/532	45°	25.4	6.4	HM-1025-45
1064/532	45°	50.0	10.0	HM-5010M-45
1064/532	0°	50.8	9.5	HM-2037-0
1064/532	45°	50.8	9.5	HM-2037-45

CVI Laser Optics

ND:YAG 1064/633 nm DUAL WAVELENGTH MIRRORS

YH dielectric wavelength mirrors are designed for high reflectivity and durability at both Nd:YAG and HeNe wavelengths at either 0° or 45°.

- R > 99% at 1064 nm and R > 80% at 633 nm
- Alignment mirror for Nd:YAG using HeNe laser
- Contact an applications engineer for OEM options

Specifications

Product Code: YH

Substrate Material: N-BK7 glass

S1 Surface Figure: λ/10 @ 633 nm before coating

S1 Surface Quality: 10-5 scratch and dig

S2 Surface Quality: Commercial polish

Diameter Tolerance: Ø +0/–0.25 mm

Thickness Tolerance: t ±0.25 mm

Wedge: ≤5 arc min

Chamfer: 0.35 mm at 45° typical

Minimum Unpolarized Reflectance at 1064 nm: 99.0%

Minimum Unpolarized Reflectance at 633 nm: 80.0%

Coating Technology: Electron beam multilayer dielectric

Adhesion and Durability: Per MIL-C-675C. Insoluble in lab solvents.

Clear Aperture: ≥85% of central diameter

Angle of Incidence: 0° or 45°

Reflectivity: R > 99% at 1064 nm, R > 80% at 633 nm

Damage Threshold: >8 J/cm², 20 nsec, 20 Hz @ 1064 nm

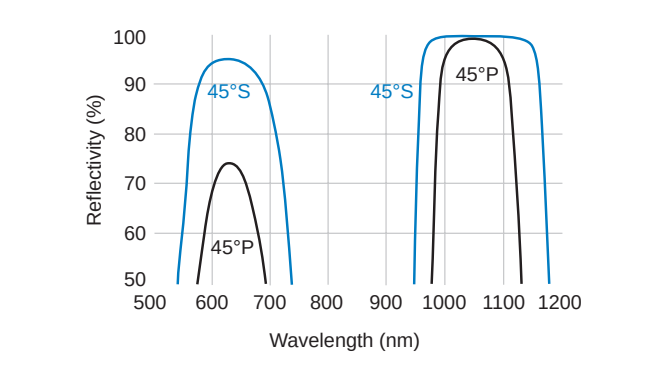

Reflectivity vs wavelength of 1064/633 nm laser mirror YH-1037-45

Standard Products

Wavelength (nm)	Incidence Angle	Ø (mm)	t (mm)	PART NUMBER
Nd:YAG 1064/633 nm Dual Wavelength Mirrors				
1064/633	45°	25.4	6.35	YH-1025-45
1064/633	45°	38.1	9.53	YH-1537-45
1064/633	45°	50.8	9.53	YH-2037-45

IDEX OPTICS & PHOTONICS MARKETPLACE

CVI Laser Optics

DIODE PUMPED RESONATOR MIRRORS

Specifications

Product Code: DPY

Substrate Material: N-BK7

Surface Figure: λ/10 at 633 nm before coating

Surface Quality: 10-5 scratch and dig

Diameter Tolerance: Ø +0/–0.25 mm

Thickness Tolerance: t ±0.25 mm

Wedge: ≤5 arc min

Chamfer: 0.35 mm at 45° typical

Concentricity: ≤0.05 mm

Radius Tolerance: ±0.5%

Coating Technology: Electron beam multilayer dielectric

Adhesion and Durability: Per MIL-C-675C. Insoluble in lab solvents.

Clear Aperture: ≥85% of central diameter

Angle of Incidence: 0°

Reflectivity:
R > 99.5% at 1064 nm
R > 99.5% at 1047 – 1053 nm

Transmission: T > 95% at 808 nm

Damage Threshold
Pulsed: 10 J/cm^2, 20 nsec, 20 Hz @ 1064 nm
cw: 1 MW/cm^2 @ 1064 nm

Diode pumped cavity optics require high reflectance at 1064 nm and transmission approaching 100% at the pump wavelength. To meet these requirements, CVI Laser Optics has developed the DPY series short wave-pass dichroic coatings. CVI diode pumped resonator mirrors achieve reflectance greater than 99.5% and transmission greater than 95% near 808 nm.

- Pump reflectors
- Antireflection coating (R < 0.25%) for diode pump wavelength included on S2
- Other diode pump wavelengths or substrates can be specified for OEM applications

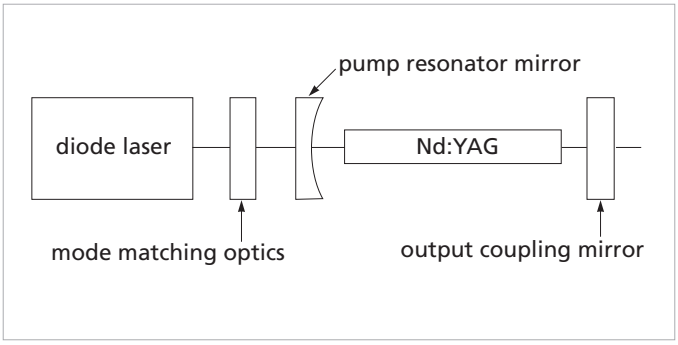

Pump resonator mirror configuration example

Standard Products

Ø (mm)	t (mm)	Radius of Curvature (m)	PART NUMBER
Diode Pumped Resonator Mirrors			
12.7	6.35	∞	DPY-R1064-T808-0525
12.7	6.35	0.10	DPY-R1064-T808-0525-0.10CC
12.7	6.35	0.25	DPY-R1064-T808-0525-0.25CC
12.7	6.35	1.00	DPY-R1064-T808-0525-1.00CC
25.4	6.35	∞	DPY-R1064-T808-1025
25.4	6.35	0.10	DPY-R1064-T808-1025-0.10CC
25.4	6.35	0.25	DPY-R1064-T808-1025-0.25CC
25.4	6.35	1.00	DPY-R1064-T808-1025-1.00CC

CVI Laser Optics

ND:YLF LASER MIRRORS

The YL series of Nd:YLF laser line mirrors utilize durable, dielectric coatings to achieve both high damage threshold and high reflectivity. The YL1 is specific to the primary wavelength and covers the range of 1047 – 1053 nm.

For multiwavelength reflectance mirrors, please choose our ultrabroadband mirror product BBDM.

- High damage threshold
- High reflectivity > 99.5% at 0°
- Contact us about additional flat, convex and concave substrates for OEM applications

Specifications

Product Code: YL1 • YL2 • YL3 • YL4 • YL5

Substrate Material: λ<450 nm: UV-grade fused silica, λ ≥450 nm: N-BK7 glass

S1 Surface Figure: λ /10 at 633 nm before coating

S1 Surface Quality: 10-5 scratch and dig

S2 Surface Quality: Commercial polish

Diameter Tolerance: Ø +0/–0.25 mm

Thickness Tolerance: t ±0.25 mm

Wedge: ≤5 arc min

Chamfer: 0.35 mm at 45° typical

Concentricity: ≤0.05 mm

Radius Tolerance: ±0.5%

Coating Technology: Electron beam multilayer dielectric

Adhesion and Durability: Per MIL-C-675C. Insoluble in lab solvents.

Clear Aperture: ≥85% of central diameter

Reflectivity: Rp>99.0%, Rs > 99.7%,

Damage Threshold
Pulsed: 20 J/cm^2, 20 nsec, 20 Hz @ 1064 nm
cw: 1 MW/cm^2 @ 1064 nm

Standard Products

Wavelength (nm)	Incidence Angle	Ø (mm)	t (mm)	PART NUMBER
Standard Nd:YLF Laser Mirrors for 1047 – 1053 nm				
1047 – 1053	45	12.7	6.35	YL1-0525-45
1047 – 1053	0	25.4	6.35	YL1-1025-0
1047 – 1053	45	25.4	6.35	YL1-1025-45
1047 – 1053	45	38.1	9.53	YL1-1537-45
1047 – 1053	45	50.8	9.53	YL1-2037-45
Standard Nd:YLF Laser Mirrors for 524 – 527 nm				
524 – 527	45	25.4	6.35	YL2-1025-45
524 – 527	45	38.1	9.53	YL2-1537-45
524 – 527	45	50.8	9.53	YL2-2037-45
Standard Nd:YLF Laser Mirrors for 349 – 351 nm				
349 – 351	45	25.4	6.35	YL3-1025-45
349 – 351	45	50.8	9.53	YL3-2037-45
Standard Nd:YLF Laser Mirrors for 262 – 263 nm				
262 – 263	45	25.4	6.35	YL4-1025-45
262 – 263	45	50.8	6.35	YL4-2037-45
Standard Nd:YLF Laser Mirrors for 209 – 211 nm				
209 – 211	45	25.4	6.35	YL5-1025-45

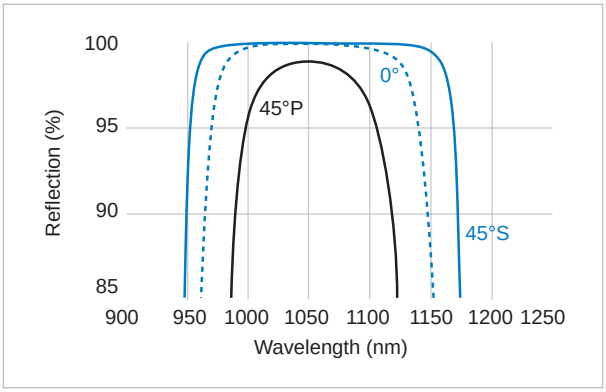

Reflectivity vs wavelength of YL1 series 1047 – 1053 nm Nd:YLF laser mirror for 0° and 45° incidence angle designs

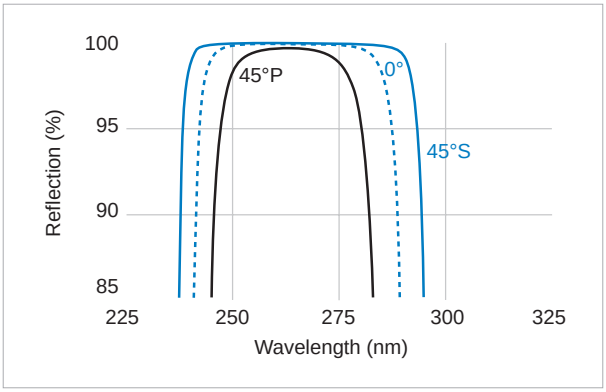

Reflectivity vs wavelength of YL4 series 262 – 263 nm Nd:YLF laser mirror for 0° and 45° incidence angle designs

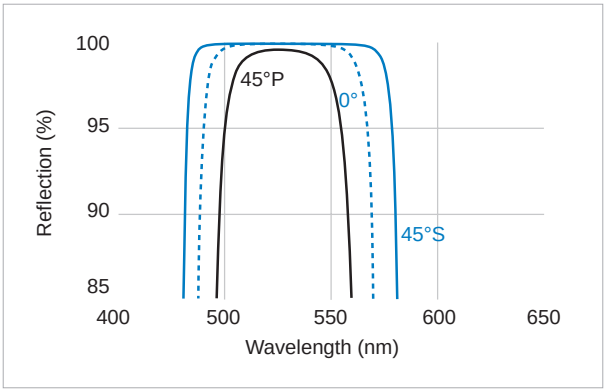

Reflectivity vs wavelength of YL2 series 524 – 527 nm Nd:YLF laser mirror for 0° and 45° incidence angle designs

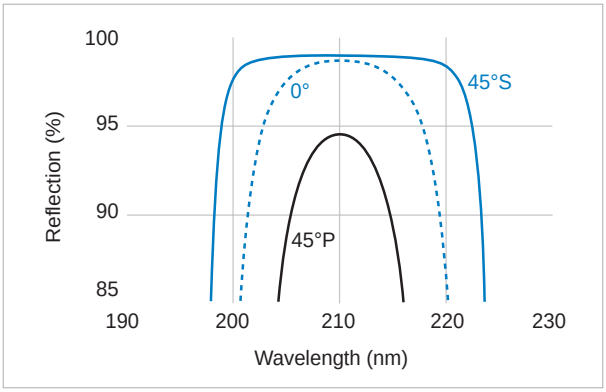

Reflectivity vs wavelength of YL5 series 209 – 211 nm Nd:YLF laser mirror for 0° and 45° incidence angle designs

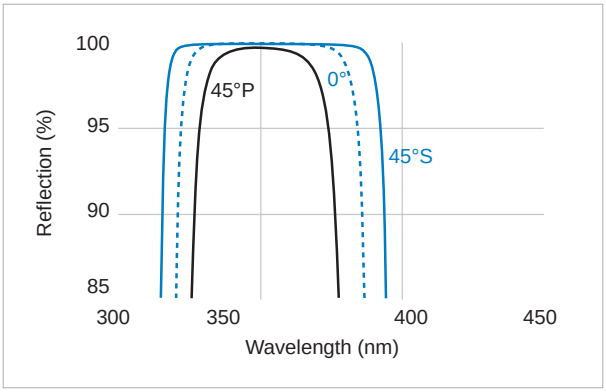

Reflectivity vs wavelength of YL3 series 349 – 351 nm Nd:YLF laser mirror for 0° and 45° incidence angle designs

Product Code: TLMB

Substrate Material: N-BK7 glass

S1 Surface Figure: λ/10 @ 633 nm before coating

S1 Surface Quality: 10-5 scratch and dig

S2 Surface Quality: Commercial polish

Diameter Tolerance: Ø +0/–0.25 mm

Thickness Tolerance: t ±0.25 mm

Wedge: ≤5 arc min

Adhesion and Durability: Per MIL-C-675C. Insoluble in lab solvents.

Clear Aperture: ≥85% of central diameter

Angle of Incidence: 0° or 45° UNP

Center Wavelength: 800 nm

Reflectivity: R > 99.0% from 740 – 860 nm for 0° or 45° UNP

Damage Threshold:
Pulsed: 0.46 J/cm^2, 50 fsec, 50 Hz @ 800 nm

Coated Surface Figure: λ/10 @ 633 nm

CVI Laser Optics

TI:SAPPHIRE MIRRORS

Traditional high damage mirrors are limited in bandwidth. Broader reflectivity bands can be achieved by using different coating materials, but that reduces the damage threshold.

These mirrors are available upon special request for all Ti:Sapphire laser-related center wavelengths.

- Designed for Pulse Lengths > 30 fs
- Ultrahard coatings with high laser-damage threshold of 0.46 J/cm^2, 50 fsec, 50 Hz
- Broadband design with ultralow group velocity dispersion (GVD)
- High reflectivity: 740 – 860 nm for 0° or 45° Unpolarized
- Contact CVI Laser Optics for a range of custom options such as wavelength, curved substrates or very large large mirror options up to 0.5 meters (18" diameter)

Standard Products

Incidence Angle	Ø (mm)	t (mm)	PART NUMBER
Ti:Sapphire Mirrors			
0°	25.4	6.4	TLMB-800-0-1025
45°	25.4	6.4	TLMB-800-45-1025
0°	50.8	9.5	TLMB-800-0-2037
45°	50.8	9.5	TLMB-800-45-2037
45°	76.2	12.7	TLMB-800-45-3050
45°	101.6	12.7	TLMB-800-45-4050

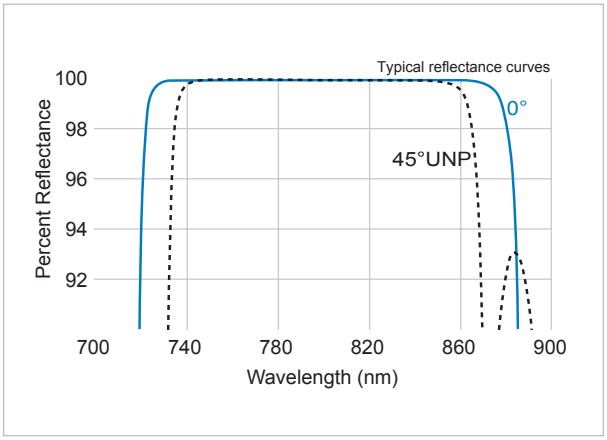

TLMB-800 Ti:Sapphire broadband mirror showing 0[deg] and 45[deg] angle of incidence designs

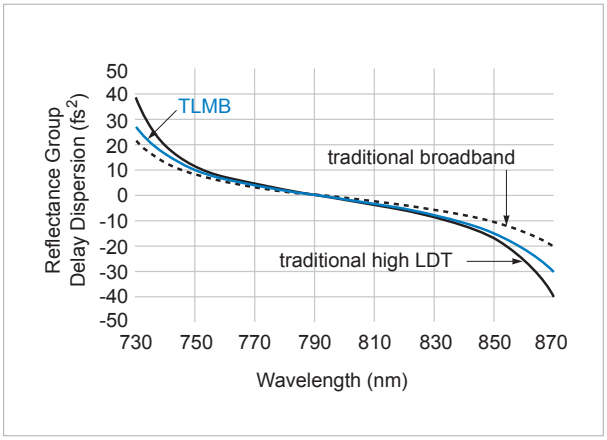

A comparison of group delay dispersion vs wavelength of traditional broadband, traditional high laser damage threshold, and the CVI Laser Optics TLMB ultrafast mirror

Semi Custom Use the selection menu below to build your own part

YOUR CUSTOM PART NUMBER TLMB — 800 — 45 — 1025

PRODUCT CODE

TLMB

WAVELENGTH (nm)

800

ANGLE OF INCIDENCE in Degrees

0	Normal incidence
45	45 degrees

SIZE CODE	Diameter (mm)	Thickness (mm)
2506M	25.0	6.0
1025	25.4	6.35
5010M	50.0	10.0
2037	50.8	9.53
3050	76.2	12.7
4050	101.6	12.7

CVI Laser Optics

FIBER LASER MIRRORS

- Applications include: laser marking, precision micromachining, optical tweezers, and Diode-Pumped Solid-State lasers
- Other center wavelengths and substrate dimensions are available for OEM applications

Specifications

Product Code: FLM

Substrate Material: UV-grade fused silica

S1 Surface Figure: λ/10 at 633 nm before coating

S1 Surface Quality: 10-5 scratch and dig

S2 Surface Quality: Commercial polish

Diameter Tolerance: Ø +0/–0.25 mm

Thickness Tolerance: t ±0.25 mm

Wedge: ≤5 arc min

Chamfer: 0.35 mm at 45° typical

Coating Technology: Electron beam multilayer dielectric

Adhesion and Durability: Per MIL-C-675C. Insoluble in lab solvents.

Clear Aperture: ≥85% of central diameter

Damage Threshold:
Pulsed: 20 J/cm^2, 20 nsec, 20 Hz @ 1064 nm
cw:10 MW/cm^2 @ 1064 nm

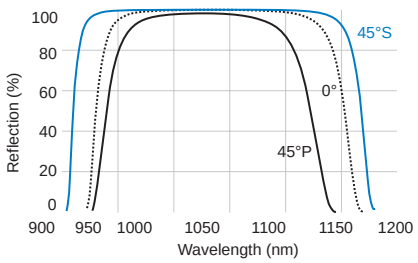

Reflectivity vs wavelength of FLM fiber laser mirror at 1030 nm for 0° and 45° designs

Standard Products

Wavelength (nm)	Incidence Angle	Ø (mm)	t (mm)	PART NUMBER
Standard Fiber Laser Mirrors				
1030.0	45	12.7	6.35	FLM-1030-0525-45
1030.0	0	25.4	6.35	FLM-1030-1025-0
1030.0	45	25.4	6.35	FLM-1030-1025-45
1030.0	0	50.8	6.35	FLM-1030-2037-0
1030.0	45	50.8	6.35	FLM-1030-2037-45
1064.0	45	12.7	6.35	FLM-1064-0525-45
1064.0	0	25.4	6.35	FLM-1064-1025-0
1064.0	45	25.4	6.35	FLM-1064-1025-45
1064.0	0	50.8	6.35	FLM-1064-2037-0
1064.0	45	50.8	6.35	FLM-1064-2037-45
1070.0	45	12.7	6.35	FLM-1070-0525-45
1070.0	0	25.4	6.35	FLM-1070-1025-0
1070.0	45	25.4	6.35	FLM-1070-1025-45
1070.0	0	50.8	6.35	FLM-1070-2037-0
1070.0	45	50.8	6.35	FLM-1070-2037-45
1550.0	45	12.7	6.35	FLM-1550-0525-45
1550.0	0	25.4	6.35	FLM-1550-1025-0
1550.0	45	25.4	6.35	FLM-1550-1025-45
1550.0	0	50.8	6.35	FLM-1550-2037-0
1550.0	45	50.8	6.35	FLM-1550-2037-45

IDEX OPTICS & PHOTONICS MARKETPLACE

Semrock

350 – 1100 nm MAXMIRROR® ULTRABROADBAND MIRRORS

The Semrock 350 – 1100 nm MaxMirror® Ultrabroadband Mirror High-performance laser mirror covers an exceptionally broad range of wavelengths, and is designed to replace three or more conventional laser mirrors. Highly reflecting over near-UV, all visible, and near-IR wavelengths. MaxMirrors simultaneously reflect all states of polarization and all angles of incidence from 0° to 50° inclusive.

- Applications include confocal microscopy and multiphoton fluorescence
- Near UV, all visible, and near IR
- R_{avg} > 99.0% for all angles up to 50°
- Nd:YAG fundamental and harmonic wavelengths

Specifications

Product Code: BBDM

Substrate Material: Fused Silica

S1 Surface Figure: λ/10 waves/inch

S1 Surface Quality: 10-5 scratch and dig

S2 Surface Quality: Commercial polish

Diameter Tolerance: Ø +0/–0.10 mm

Thickness Tolerance: t ±0.20 mm

Coating Technology: Ion beam sputtered dielectric

Adhesion and Durability: Per MIL-C-675C. Insoluble in lab solvents.

Clear Aperture: ≥90% of central diameter

Reflectivity:
45°: Ravg > 99.0% for unpolarized
0 – 50°: Ravg > 99.0% for unpolarized

Damage Threshold:
Pulsed: 1 J/cm² @ 355 nm (10 ns pulse width),
2 J/cm² @ 532 nm (10 ns pulse width),
6 J/cm² @ 1064 nm (10 ns pulse width)

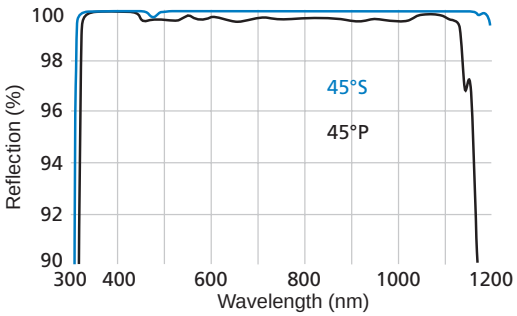

Reflectivity vs wavelength of BBDM broadband VIS/NIR mirror

Standard Products

Wavelength (nm)	Ø (mm)	t (mm)	PART NUMBER
Semrock 350-1100 nm MaxMirror® Ultrabroadband Mirrors			
350 – 1100	25.0	6.0	BBDM-PM-2506M-UV
350 – 1100	25.0	6.0	BBDM-PM-2506M-UV-10PACK
350 – 1100	25.4	6.0	BBDM-PM-1024-UV
350 – 1100	25.4	6.0	BBDM-PM-1024-UV-10PACK

Specifications

Product Code: TLM2

Substrate Material: N-BK7

S1 Surface Figure: λ/10 @ 633 nm before coating

S1 Surface Quality: 10-5 scratch and dig

S2 Surface Quality: Commercial polish

Diameter Tolerance: Ø +0/–0.25 mm

Thickness Tolerance: t ±0.25 mm

Wedge: ≤5 arc min

Chamfer: 0.35 mm at 45° typical

Concentricity: ≤0.05 mm

Radius Tolerance: ±0.5%

Coating Technology: Electron beam multilayer dielectric

Adhesion and Durability: Per MIL-C-675C. Insoluble in lab solvents.

Clear Aperture: ≥85% of central diameter

Center Wavelength: 780, 800 or 1030 nm

Reflectivity: Please refer to the typical bandwidth tables

Damage Threshold:
Pulsed:
0.28 J/cm^2, 50 fsec, 50 Hz @ 800 nm
0.50 J/cm^2, 20 nsec, 20 Hz @ 1064 nm

Bandwidth Tolerance: +0/–10% of typical (see graph)

Center Wavelength Tolerance: ±3%

CVI Laser Optics

TUNABLE BROADBAND MIRRORS

The TLM2 mirrors are specially designed to achieve high reflectivity and low dispersion for cw oscillators and low-fluence pulses. These mirrors can be coated for any angle of incidence from 0° to 60° and any center wavelength between 450 nm and 2100 nm for OEM applications. For 45° tuning mirror applications involving very short pulses or very broad bandwidths, CVI Laser Optics recommends using *s* - polarization if possible. This minimizes pulse distortion and maximizes average reflectivity. Check that the bandwidth is realistic by using the typical bandwidth for TLM2 mirror tables, then specify the exact center wavelength and all other parameters in the ordering blocks.

- Designed for Pulse Lengths > 30 fs
- High energy dielectric coating
- Other wavelengths and substrates available upon request
- Contact us for OEM capabilities

Typical Bandwidth for TLM2 mirrors

Center Wavelength (nm)	Bandwidth (nm)		
	R > 99% 0°	R > 99.5%° S	R > 99% 45° P
450	90	113	45
500	100	125	50
550	110	138	55
600	120	150	60
650	130	163	65
700	140	175	70
750	150	188	75
800	156	197	76
850	161	204	76
900	167	212	77
950	171	219	77
1000	180	230	80
1100	193	248	83
1200	210	264	90
1300	221	280	91
1400	238	294	98
1500	255	315	105

IDEX OPTICS & PHOTONICS MARKETPLACE

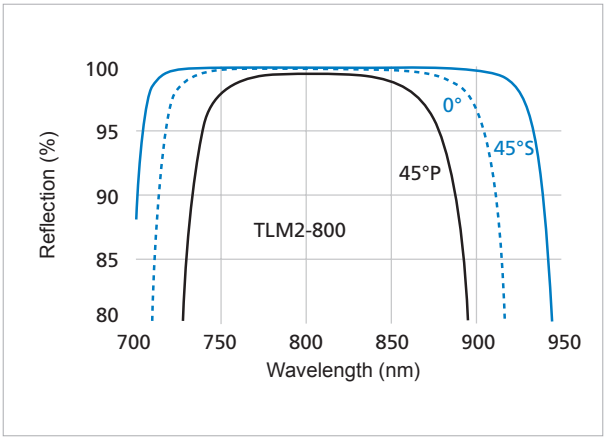

Reflectivity vs wavelength of TLM2-800 broadband laser mirror showing 0° and 45° angle of incidence designs

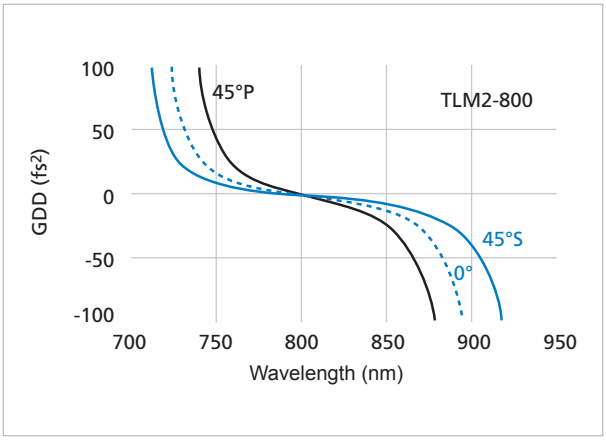

Group velocity dispersion vs wavelength of TLM2-800 broadband laser mirror showing 0° and 45° angle of incidence designs

Standard Products

Wavelength (nm)	Incidence Angle	Ø (mm)	t (mm)	PART NUMBER
Standard TLM2 Laser Line Mirrors				
780	0	25.4	6.35	TLM2-780-45-1025
800	0	12.7	6.35	TLM2-800-0-0525
800	45	12.7	6.35	TLM2-800-45-0525
800	0	25.4	6.35	TLM2-800-0-1025
800	45	25.4	6.35	TLM2-800-45-1025
800	45	25.4	9.53	TLM2-800-45-1537
800	0	50.8	9.53	TLM2-800-0-2037
800	45	50.8	9.53	TLM2-800-45-2037
1030	45	12.7	6.35	TLM2-1030-45-0525
1030	45	25.4	6.35	TLM2-1030-45-1025

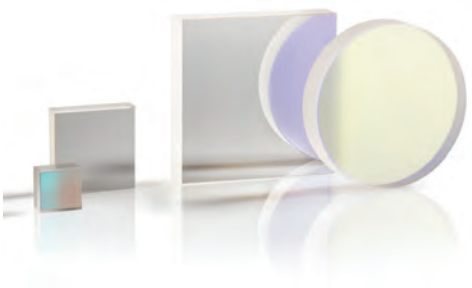

MAXBRIte™ coatings offer extremely high reflectance over a broad range of wavelengths. Most of the ultraviolet, visible, and near-infrared laser wavelengths are covered by one of the four MAXBRIte coating ranges.

- MAXBRIte coatings operate for angles of incidence as high as 45°.
- Minimum of 98% reflectance is achieved over a wide wavelength range at angles of incidence from 0 to 45°.
- Contact CVI Laser Optics for OEM options.

Specifications 245 – 390 nm

Product Code: MPQ

Dimensions:
Square: □ ±0.25 mm
Round: Ø+0/–0.15 mm

Surface Flatness: λ/4

Thickness: t±0.25 mm

Parallelism: 3 arc minutes

Clear Aperture: 90% of edge dimension or diameter

Coating: MAXBRIte/007

Average Reflectance: ≥98% (245 – 390 nm)

Material: Fused silica

Damage Threshold: 0.92 J/cm^2, 10 nsec @ 532 (typical)

FLAT MIRRORS WITH MAXBRITE™ BROADBAND COATINGS

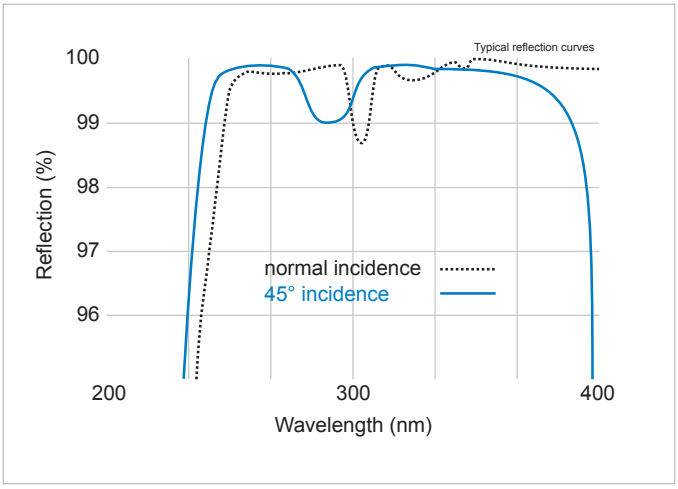

MAXBRIte™ coating 245 – 390 nm

Standard Products 245 – 390 nm

Surface Flatness	Ø (mm)	t (mm)	Surface Quality (scratch-dig)	Clear Aperture (mm)	PART NUMBER
MAXBRIte™ Round Flat Mirrors					
λ/4	12.5	6	60 – 40	11.3	MPQ-245-390-1206M
λ/4	25.0	6	60 – 40	22.5	MPQ-245-390-2506M
λ/4	50.0	10	60 – 40	45.0	MPQ-245-390-5010M
MAXBRIte™ Square Flat Mirrors					
λ/4	12.5	6	60 – 40	11.3x11.3	MPQ-245-390-SQM-1206M
λ/4	25.0	6	60 – 40	22.5x22.5	MPQ-245-390-SQM-2506M
λ/4	50.0	10	60 – 40	45.0x45.0	MPQ-245-390-SQM-5010M

Specifications 420 – 700 nm

Product Code: MPQ

Dimensions
Square: □ ±0.25 mm
Round: Ø+0/–0.15 mm

Surface Flatness: λ/4

Thickness: t±0.25 mm

Parallelism: 3 arc minutes

Clear Aperture: 90% of edge dimension or diameter

Coating: MAXBRIte /009

Average Reflectance: ≥98% (420 – 700 nm)

Material: Fused silica

Damage Threshold: 0.4 J/cm^2, 10 nsec @ 532 (typical)

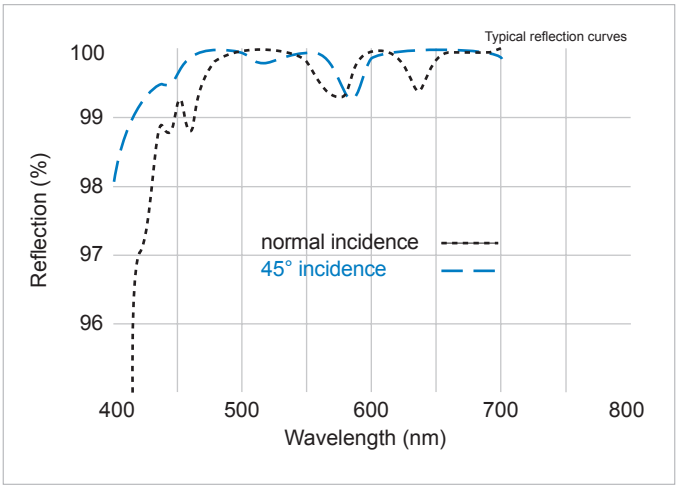

MAXBRIte™ coating 420 – 700 nm

Standard Products 420 – 700 nm

Surface Flatness	Ø (mm)	t (mm)	Surface Quality (scratch-dig)	Clear Aperture (mm)	PART NUMBER
MAXBRIte™ Round Flat Mirrors					
λ/4	12.5	6	60 – 40	11.3	MPQ-420-700-1206M
λ/4	25.0	6	60 – 40	22.5	MPQ-420-700-2506M
λ/4	50.0	10	60 – 40	45.0	MPQ-420-700-5010M
MAXBRIte™ Square Flat Mirrors					
λ/4	12.5	6	60 – 40	11.3x11.3	MPQ-420-700-SQM-1206M
λ/4	25.0	6	60 – 40	22.5x22.5	MPQ-420-700-SQM-2506M
λ/4	50.0	10	60 – 40	45.0x45.0	MPQ-420-700-SQM-5010M

Specifications 480 – 700 nm

Product Code: MPQ

Dimensions:
Square: □±0.25 mm
Round: Ø+0/–0.15 mm

Surface Flatness: λ/4

Thickness: t±0.25 mm

Parallelism: 3 arc minutes

Clear Aperture: 90% of edge dimension or diameter

Coating: MAXBRIte /001

Average Reflectance: ≥98% (480 – 700 nm)

Material: Fused silica

Damage Threshold: 0.92 J/cm², 10 nsec @ 532 (typical)

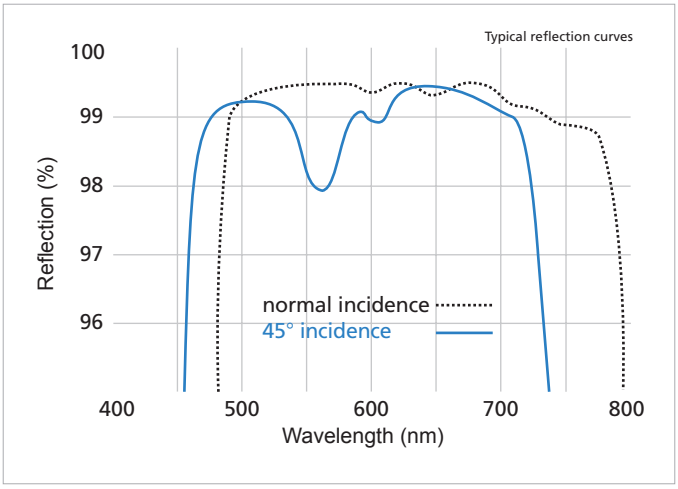

MAXBRIte™ coating 480 – 700 nm

Standard Products 480 – 700 nm

Surface Flatness	Ø (mm)	t (mm)	Surface Quality (scratch-dig)	Clear Aperture (mm)	PART NUMBER
MAXBRIte™ Round Flat Mirrors					
λ/4	12.5	6	60-40	11.3	MPQ-480-700-1206M
λ/4	25.0	6	60-40	22.5	MPQ-480-700-2506M
λ/4	50.0	10	60-40	45.0	MPQ-480-700-5010M
MAXBRIte™ Square Flat Mirrors					
λ/4	12.5	6	60-40	11.3x11.3	MPQ-480-700-SQM-1206M
λ/4	25.0	6	60-40	22.5x22.5	MPQ-480-700-SQM-2506M
λ/4	50.0	10	60-40	45.0x45.0	MPQ-480-700-SQM-5010M

IDEX OPTICS & PHOTONICS MARKETPLACE

Specifications 630 – 850 nm

Product Code: MPQ

Dimensions:
Square: □±0.25 mm
Round: Ø+0/–0.15 mm

Surface Flatness: λ/4

Thickness: t±0.25 mm

Parallelism: 3 arc minutes

Clear Aperture: 90% of edge dimension or diameter

Coating: MAXBRIte /003

Average Reflectance: ≥98%

Material: Fused silica

Damage Threshold: 0.92 J/cm², 10 nsec @ 532 (typical)

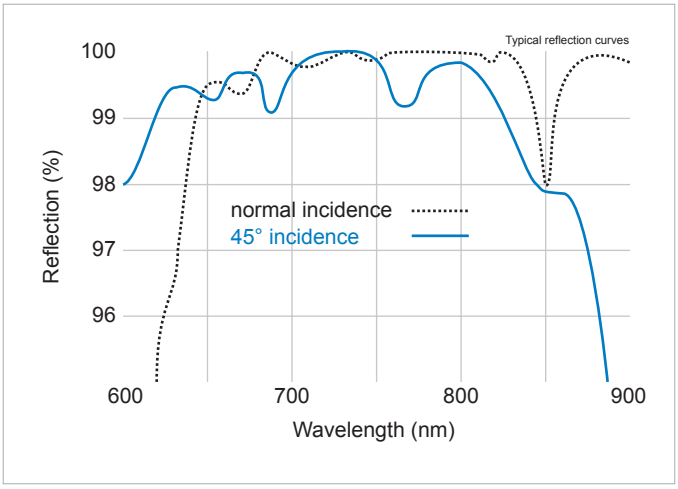

MAXBRIte™ coating 630 – 850 nm

Standard Products 630 – 850 nm

Surface Flatness	Ø (mm)	t (mm)	Surface Quality (scratch-dig)	Clear Aperture (mm)	PART NUMBER
MAXBRIte™ Round Flat Mirrors					
λ/4	12.5	6	60-40	11.3	MPQ-630-850-1206M
λ/4	25.0	6	60-40	22.5	MPQ-630-850-2506M
λ/4	50.0	10	60-40	45.0	MPQ-630-850-5010M
MAXBRIte™ Square Flat Mirrors					
λ/4	12.5	6	60-40	11.3x11.3	MPQ-630-850-SQM-1206M
λ/4	25.0	6	60-40	22.5x22.5	MPQ-630-850-SQM-2506M
λ/4	50.0	10	60-40	45.0x45.0	MPQ-630-850-SQM-5010M

- Highly reflecting, all dielectric mirrors centered at popular diode wavelengths
- Other center wavelengths, sizes, and spherical mirrors are available for OEM applications

CVI Laser Optics

LASER DIODE MIRRORS FOR 0° AND 45° INCIDENCE

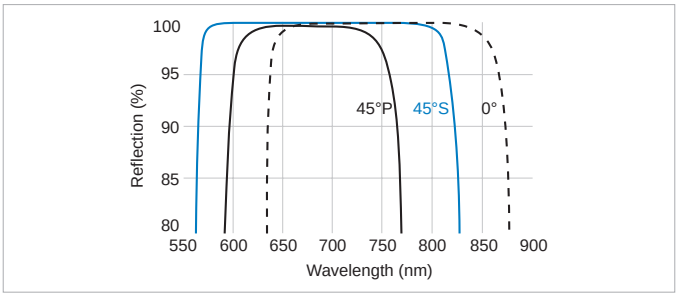

Reflectivity vs wavelength of diode laser mirror LDM-670-1037 for 0° and 45° incidence angle designs

Specifications

Product Code: LDM

Substrate Material: N-BK7 glass

S1 Surface Figure: λ/10 at 633 nm before coating

S1 Surface Quality: 10-5 scratch and dig

S2 Surface Quality: Commercial polish

Diameter Tolerance: Ø +0/–0.25 mm

Thickness Tolerance: t ±0.25 mm

Wedge: ≤5 arc min

Concentricity: ≤0.05 mm

Radius Tolerance: ±0.5%

Adhesion and Durability: Per MIL-C-675C. Insoluble in lab solvents.

Clear Aperture: ≥85% of central diameter

Reflectivity: R > 99.6% @ 0° incidence, R > 99.0% @ 45° incidence, unpolarized

Damage Threshold: 500 mJ/cm², 8 nsec @ 1064 nm

Standard Products

Ø (mm)	t (mm)	Incidence Angle	Wavelength (nm)	Bandwidth (nm)	PART NUMBER
Standard Laser Diode Mirrors for 670 nm					
25.4	6.4	0°	670	130	LDM-670-1025-0
25.4	6.4	45°	670	130	LDM-670-1025-45
50.8	9.5	0°	670	130	LDM-670-2037-0
50.8	9.5	45°	670	130	LDM-670-2037-45
Standard Laser Diode Mirrors for 780 nm					
25.4	6.4	0°	780	155	LDM-780-1025-0
25.4	6.4	45°	780	155	LDM-780-1025-45
50.8	9.5	0°	780	155	LDM-780-2037-0
50.8	9.5	45°	780	155	LDM-780-2037-45
Standard Laser Diode Mirrors for 980 nm					
25.4	6.4	0°	980	180	LDM-980-1025-0
25.4	6.4	45°	980	180	LDM-980-1025-45
50.8	9.5	0°	980	180	LDM-980-2037-0
50.8	9.5	45°	980	180	LDM-980-2037-45
Standard Laser Diode Mirrors for 1300 nm					
25.4	6.4	0°	1300	220	LDM-1300-1025-0
25.4	6.4	45°	1300	220	LDM-1300-1025-45
50.8	9.5	0°	1300	220	LDM-1300-2037-0
50.8	9.5	45°	1300	220	LDM-1300-2037-45
Standard Laser Diode Mirrors for 1550 nm					
25.4	6.4	0°	1550	255	LDM-1550-1025-0
25.4	6.4	45°	1550	255	LDM-1550-1025-45
50.8	9.5	0°	1550	255	LDM-1550-2037-0
50.8	9.5	45°	1550	255	LDM-1550-2037-45

IDEX OPTICS & PHOTONICS MARKETPLACE

Semi Custom

Use the selection menu below to build your own part

YOUR CUSTOM PART NUMBER LDM — 780 — 1025 — 0

PRODUCT CODE

LDM

WAVELENGTH (nm)

670	**780**	**980**	**1300**	**1550**

SIZE CODE	Diameter (mm)	Thickness (mm)
2506M	25.0	6.0
1025	25.4	6.35
5010M	50.0	10.0
2037	50.8	9.53

ANGLE OF INCIDENCE in Degrees

0	Normal incidence
45	45 degrees

VACUUM UV ALUMINUM MIRRORS

Based on CVI Laser Optics high density aluminum coating technology, VUVA mirrors are designed for optimized performance at 157 nm. Certification of performance at wavelength is available for an additional charge. Call us for more details.

- Contact an applications engineer for OEM capabilities

Specifications

Product Code: VUVA

Substrate Material: UV-grade fused silica

S1 Surface Figure: λ/10 @ 633 nm

S1 Surface Quality: 40-20 scratch and dig

S2 Surface Quality: Commercial polish

Diameter Tolerance: Ø +0/–0.25 mm

Thickness Tolerance: t ±0.25 mm

Wedge: ≤5 arc min

Chamfer: 0.35 mm at 45° typical

Adhesion and Durability: Per MIL-M-13508-C

Clear Aperture: ≥85% of central diameter

Reflectivity: R > 85% @ 157 nm

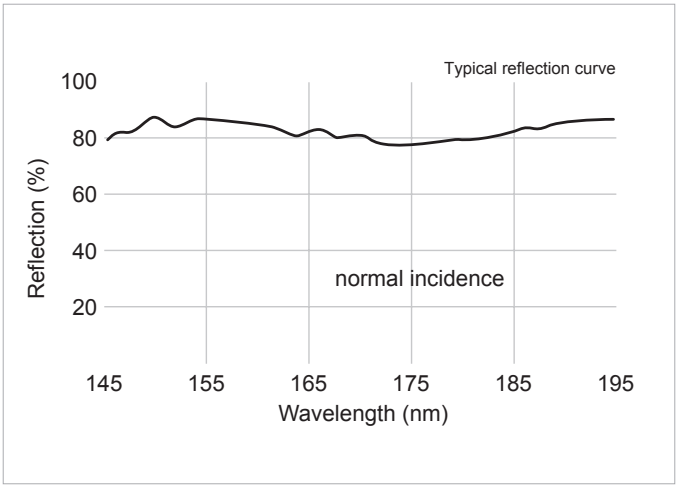

Theoetical design of VUVA coating at 157 nm and 0°

Standard Products

Ø (mm)	t (mm)	PART NUMBER
Vacuum UV Aluminum Mirrors		
25.4	6.4	VUVA-PM-1025-UV
50.8	9.5	VUVA-PM-2037-UV

IDEX OPTICS & PHOTONICS MARKETPLACE

CVI Laser Optics

DEEP UV ALUMINUM MIRRORS

Based on CVI Laser Optics high-density aluminum coating technology, broadband DUVA mirrors provide significantly higher 193 nm reflectance and durability than standard UV-protected aluminum mirrors. Choose semi-custom or standard optics for your ellipsometry, spectroscopy, and semiconductor lithography or metrology applications.

- Contact an applications engineer for OEM capabilities

Specifications

Product Code: DUVA

Substrate Material: UV-grade fused silica

S1 Surface Figure: λ/10 @ 633 nm

S1 Surface Quality: 40-20 scratch and dig

S2 Surface Quality: Commercial polish

Diameter Tolerance: Ø +0/–0.25 mm

Thickness Tolerance: t ±0.25 mm

Wedge: ≤5 arc min

Chamfer: 0.35 mm at 45° typical

Adhesion and Durability: Per MIL-M-13508-C

Clear Aperture: ≥85% of central diameter

Reflectivity:
R > 90% @ 193 nm, R_{avg} ≥85% @ 400 – 1200 nm

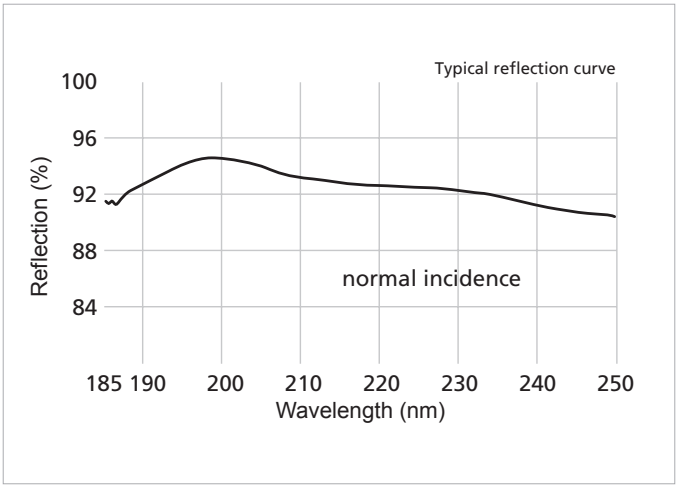

Reflectivity vs wavelength of 193 nm deep UV aluminum coating at 45°

Standard Products

Ø (mm)	t (mm)	PART NUMBER
Deep UV Aluminum Mirrors		
25.0	6.0	DUVA-PM-2506M-UV
25.4	6.4	DUVA-PM-1025-UV
50.0	10.0	DUVA-PM-5010M-UV
50.8	9.5	DUVA-PM-2037-UV

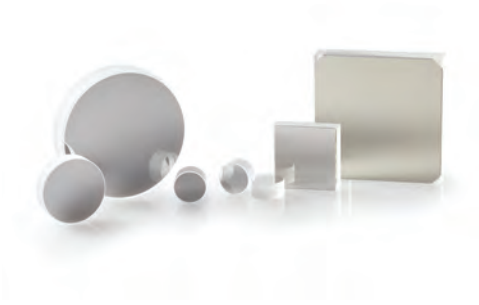

CVI Laser Optics

UV ENHANCED ALUMINUM FLAT MIRRORS

UV enhanced aluminum mirrors have an additional dielectric coating that prevents oxidation and preserves the reflectance of bare aluminum in the ultraviolet.

- Average reflectance is greater than 86% from 250 to 400 nm
- Contact an applications engineer for OEM capabilities

Specifications

Product Code: PAUV

Dimensions:
Square: □±0.25 mm
Round: Ø+0/–0.25 mm

Thickness: t±0.25 mm

Parallelism: 3 arc minutes

Clear Aperture: 90% of edge dimension or diameter (85% for PAUV-PM series)

Coating: UV-enhanced aluminum

Average Reflectance: ≥85% (250 – 600 nm)

Substrate Material: N-BK7

Wavelength Range (nm): 250 – 600 nm

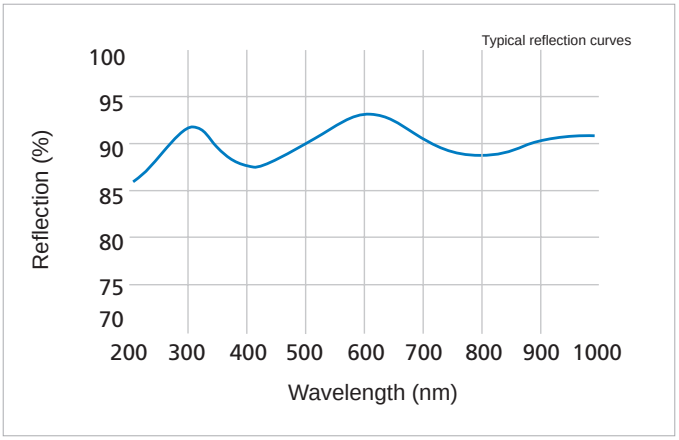

UV enhanced aluminum coating

Standard Product

Shape	Ø (mm)	□ (mm)	t (mm)	Substrate Material	Clear Aperture (mm)	Surface Quality (scratch-dig)	Surface Flatness	PART NUMBER
UV Enhanced Aluminum Flat Mirrors								
Round	12.7	—	6.4	N-BK7	11.3	40-20	λ/10	PAUV-PM-0525-C
Round	25.0	—	6.0	N-BK7	21.3	40-20	λ/10	PAUV-PM-2506M-C
Round	25.4	—	6.4	N-BK7	21.6	40-20	λ/10	PAUV-PM-1025-C
Square	—	25.4	6.4	N-BK7	22.5x22.5	40-20	λ/4	PAUV-SQM-1025-C
Round	50.8	—	9.5	N-BK7	43.2	40-20	λ/10	PAUV-PM-5010M-C
Round	50.0	—	10.0	N-BK7	45.0	40-20	λ/10	PAUV-PM-2037-C
Square	—	50.8	9.5	N-BK7	45.0x45.0	40-20	λ/4	PAUV-SQM-2037-C
Round	76.2	—	12.7	N-BK7	64.8	40-20	λ/10	PAUV-PM-3050-C
Round	101.6	—	12.7	N-BK7	86.4	40-20	λ10	PAUV-PM-4050-C

IDEX OPTICS & PHOTONICS MARKETPLACE

CVI Laser Optics

PROTECTED ALUMINUM FLAT MIRRORS

Protected aluminum is the best general-purpose metallic coating for external reflectors in the visible and near-infrared spectrum.

- Average reflectance greater than 87% from 400 to 800 nm
- Contact an applications engineer for OEM capabilities

Specifications

Product Code: PAV

Dimensions:
Square: □±0.25 mm
Round: Ø+0/–0.25 mm

Thickness: t±0.25 mm

Parallelism: 3 arc minutes

Clear Aperture:
Round: ≥85% of central diameter
Square: ≥80% of edge dimension

Coating: Protected aluminum

Average Reflectance: ≥87% (400 – 800 nm)

Substrate Material: N-BK7

Wavelength Range (nm): 400 – 800 nm

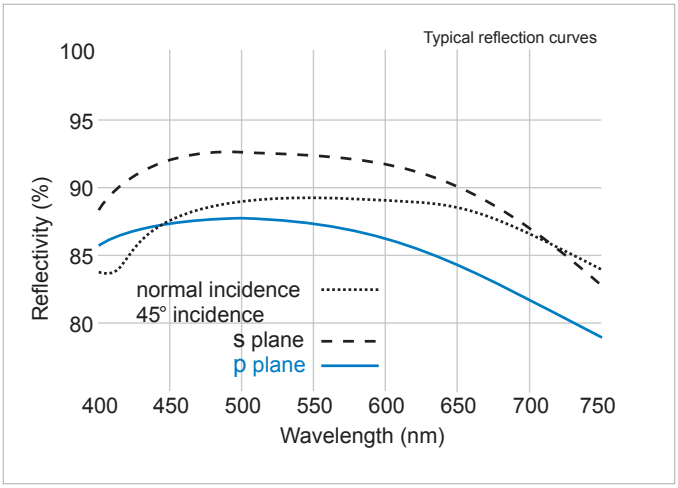

Protected aluminum coating

Standard Products

Shape	Ø (mm)	□ (mm)	t (mm)	Substrate Material	Clear Aperture (mm)	Surface Quality (scratch-dig)	Surface Flatness	PART NUMBER
Protected Aluminum Flat Mirrors								
Round	12.7	—	6.4	N-BK7	10.8	40-20	λ/10	PAV-PM-0525-C
Round	25.0	—	6.0	N-BK7	21.3	40-20	λ /10	PAV-PM-2506M-C
Round	25.4	—	6.4	N-BK7	21.6	40-20	λ /10	PAV-PM-1025-C
Square	—	25.4	6.4	N-BK7	22.5x22.5	40-20	λ/4	PAV-SQM-1025-C
Round	50.0	—	10.0	N-BK7	45.0	40-20	λ/10	PAV-PM-5010M-C
Round	50.8	—	9.5	N-BK7	43.2	40-20	λ/10	PAV-PM-2037-C
Square	—	50.8	9.5	N-BK7	45.0x45.0	40-20	λ/4	PAV-SQM-2037-C
Round	76.2	—	12.7	N-BK7	64.8	40-20	λ/10	PAV-PM-3050-C
Round	101.6	—	12.7	N-BK7	86.4	40-20	λ/10	PAV-PM-4050-C

CVI Laser Optics

ENHANCED ALUMINUM FLAT MIRRORS

Enhanced aluminum is an aluminum coating overcoated with a durable multilayer dielectric film which both increases reflectance throughout the visible spectrum and provides protection from the environment and handling.

- Peak reflectance is 95% with average reflectance across the visible spectrum of 92%

Specifications

Product Code: EAV

Diameter: Ø+0/–0.25 mm

Thickness: t±0.25 mm

Parallelism: 3 arc minutes

Clear Aperture: ≥85% of central diameter

Coating: Enhanced aluminum

Average Reflectance: ≥92% (450–650 nm)

Substrate Material: N-BK7

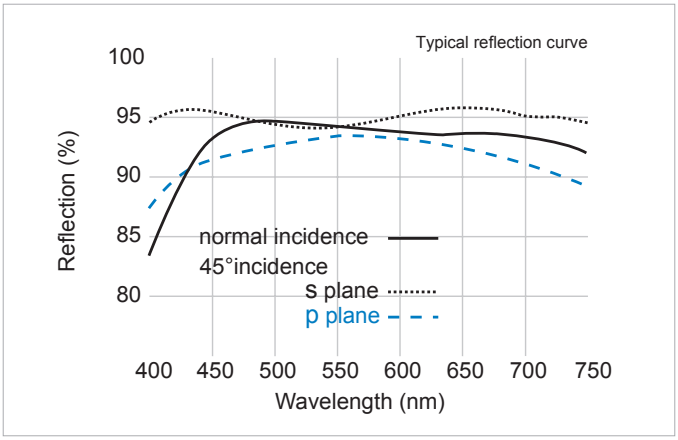

Enhanced aluminum coating

Standard Products

Shape	Ø (mm)	t (mm)	Substrate Material	Clear Aperture (mm)	Surface Quality (scratch-dig)	Surface Flatness	PART NUMBER
Enhanced Aluminum Flat Mirrors							
Round	12.7	6.4	N-BK7	11.3	40-20	λ/10	EAV-PM-0525-C
Round	25.0	6.0	N-BK7	21.3	40-20	λ/10	EAV-PM-2506M-C
Round	25.4	6.4	N-BK7	22.5	40-20	λ/10	EAV-PM-1025-C
Round	50.0	10.0	N-BK7	45.0	40-20	λ/10	EAV-PM-5010M-C
Round	50.8	9.5	N-BK7	45.0	40-20	λ/10	EAV-PM-2037-C
Round	76.2	12.7	N-BK7	67.5	40-20	λ/10	EAV-PM-3050-C
Round	101.6	12.7	N-BK7	90.0	40-20	λ/10	EAV-PM-4050-C

IDEX OPTICS & PHOTONICS MARKETPLACE

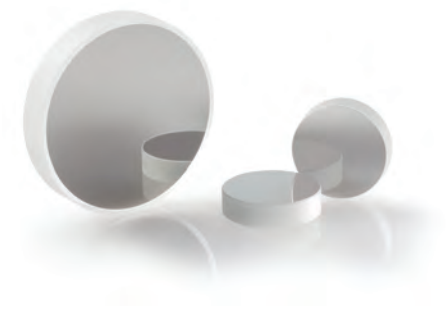

CVI Laser Optics

PROTECTED SILVER FLAT MIRRORS

CVI Laser Optics suggests using the drag and drop method with acetone for the cleaning of these mirrors.

- Minimal pulse distortion for ultrafast Ti:Sapphire lasers
- Protected silver has higher reflectance than aluminum throughout the visible and near-infrared spectral region
- A proprietary overcoat provides increased durability
- Contact an applications engineer for OEM capabilities

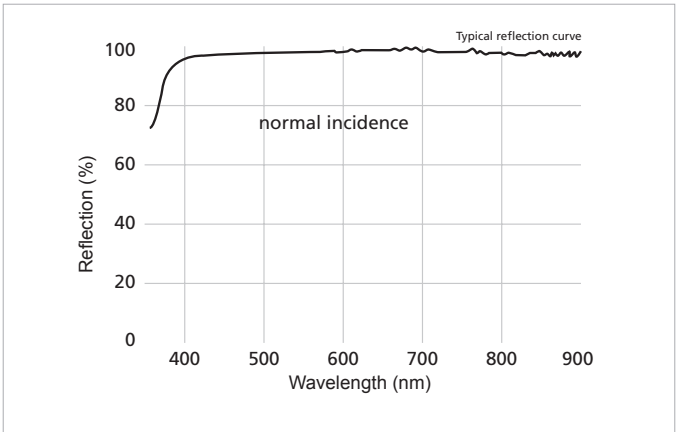

Protected silver coating

Specifications

Product Code: PS

Dimensions:
Square: □±0.25 mm
Round: Ø+0/–0.25 mm

Thickness: t±0.25 mm

Parallelism: 3 arc minutes

Clear Aperture:
Round: ≥85% of central diameter
Square: ≥80% of edge dimension

Coating: Protected silver

Average Reflectance: ≥95% (400 nm to 20 µm)

Substrate Material: N-BK7

Standard Products

Shape	Ø (mm)	□ (mm)	t (mm)	Substrate Material	Clear Aperture (mm)	Surface Quality (scratch-dig)	Surface Flatness	PART NUMBER
Protected Silver Flat Mirrors								
Round	12.7	—	6.4	N-BK7	10.8	40-20	λ/10	PS-PM-0525-C
Round	25.0	—	6.0	N-BK7	21.3	40-20	λ/10	PS-PM-2506M-C
Round	25.4	—	6.4	N-BK7	21.6	40-20	λ/10	PS-PM-1025-C
Square	—	25.4	6.4	N-BK7	22.5x22.5	40-20	λ/4	PS-SQM-1025-C
Round	50.0	—	10.0	N-BK7	40.0	40-20	λ/10	PS-PM-5010M-C
Round	50.8	—	9.5	N-BK7	43.2	40-20	λ/10	PS-PM-2037-C
Square	—	50.8	9.5	N-BK7	45.0x45.0	40-20	λ/4	PS-SQM-2037-C
Round	76.2	—	12.7	N-BK7	64.8	40-20	λ/10	PS-PM-3050-C
Round	101.6	—	12.7	N-BK7	86.4	40-20	λ/10	PS-PM-4050-C

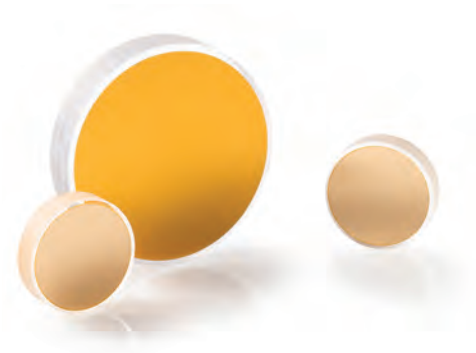

CVI Laser Optics

PROTECTED GOLD FLAT MIRRORS

- Protected gold combines the natural spectral performance of gold with the enhanced protection of a durable dielectric overcoat
- Protected gold provides 95.5% average reflectance from 650 to 1700 nm, and over 98% average reflectance from 2 to 20 µm
- Contact an applications engineer for OEM capabilities

Specifications

Product Code: PG

Dimensions:
Square: □±0.25 mm
Round: Ø+0/–0.25 mm

Thickness: t±0.25 mm

Parallelism: ≤5 arc minutes

Clear Aperture:
Square: ≥80% of edge dimension
Round: ≥85% of central diameter

Coating: Protected gold

Average Reflectance:

Protected Gold: ≥ 95.5% (650 – 1700 nm), ≥98.0% (2 – 20 µm)

Substrate Material: N-BK7

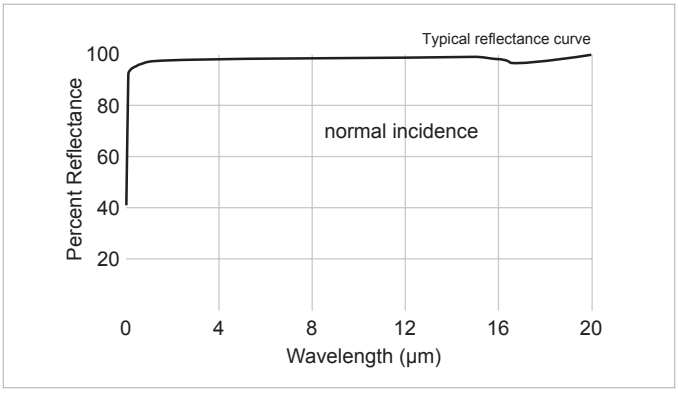

Protected gold coating

Standard Products

Shape	Ø (mm)	□ (mm)	t (mm)	Substrate Material	Clear Aperture (mm)	Surface Quality (scratch-dig)	Surface Flatness	PART NUMBER
Protected Gold Flat Mirrors								
Round	12.7	—	6.4	N-BK7	10.8	40-20	λ/10	PG-PM-0525-C
Round	25.0	—	6.0	N-BK7	21.3	40-20	λ/10	PG-PM-2506M-C
Round	25.4	—	6.4	N-BK7	21.6	40-20	λ/10	PG-PM-1025-C
Square	—	25.4	6.4	N-BK7	22.5x22.5	40-20	λ/4	PG-SQM-1025-C
Round	50.0	—	10.0	N-BK7	45.0	40-20	λ/10	PG-PM-5010M-C
Round	50.8	—	9.5	N-BK7	43.2	40-20	λ/10	PG-PM-2037-C
Square	—	50.8	9.5	N-BK7	45.0x45.0	40-20	λ/4	PG-SQM-2037-C
Round	76.2	—	12.7	N-BK7	64.8	40-20	λ/10	PG-PM-3050-C
Round	101.6	—	12.7	N-BK7	86.4	40-20	λ/10	PG-PM-4050-C

IDEX OPTICS & PHOTONICS MARKETPLACE

CVI Laser Optics

CONVEX FUSED SILICA MIRROR BLANKS

The fused silica plano-convex mirror substrates are polished to a 10-5, λ/10 surface on both sides, so they can be used as high reflectors, dichroic mirrors, or partial reflecting output couplers.

- All CVI Laser Optics high reflector, metal, and partial reflector coatings available
- Mirror focal length = –r/2
- Other dimensions and radii available in prototype and production quantities
- ±0.1% radius tolerance available

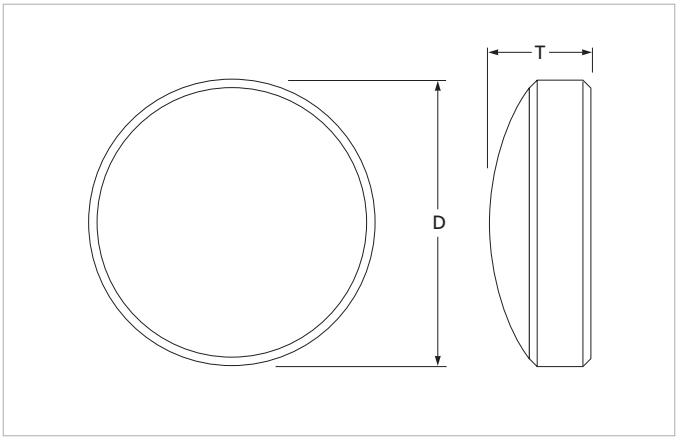

Convex spherical mirror blank

Specifications

Product Code: SMCX-UV

Substrate Material: UV-grade fused silica

S1 Surface Figure: λ/10 @ 633 nm

S1 Surface Quality: 10-5 scratch and dig

S2 Surface Figure: λ /10 @ 633 nm

S2 Surface Quality: 10-5 scratch and dig

Diameter Tolerance: Ø +0/–0.25 mm

Thickness Tolerance: t ±0.25 mm

Chamfer: 0.35 mm at 45° typical

Concentricity: <0.05 mm

Radius Tolerance:
±0.5% for r ≤ 3.5 m
±1.0% for 3.5 m < r ≤ 8.0 m

Clear Aperture: ≥85% of central diameter

Standard Products

Ø (mm)	t (mm)	r (m)	PART NUMBER
Convex Fused Silica Spherical Mirror Blanks			
12.7	6.35	1.00	SMCX-0525-1.00-UV
25.4	6.35	0.30	SMCX-1025-0.30-UV
25.4	6.35	0.50	SMCX-1025-0.50-UV
25.4	6.35	1.00	SMCX-1025-1.00-UV

CONCAVE SPHERICAL MIRRROR BLANKS

The fused silica plano-concave mirror substrates are polished to a 10-5, λ/10 surface on both sides so they can be used as high reflectors, dichroic mirrors, or partial reflecting output couplers. In all cases, the coating type, wavelength, and angle of incidence are added as a prefix to the substrate part number to create the coated part. Other dimensions and radii available in prototype and production quantities.

- Largest selection of sizes and curvatures to accommodate almost any laser resonator design
- All CVI Laser Optics high reflector, metal, and partial reflector coatings available
- Mirror focal length = –r/2
- Other dimensions and radii available in prototype and production quantities
- ±0.1% radius tolerance available

Specifications

Product Code: SMCC-C • SMCC-UV

Substrate Material: N-BK7 glass or UV-grade fused silica

S1 Surface Figure: λ/10 @ 633 nm

S1 Surface Quality: 10-5 scratch and dig

S2 Surface Figure: λ/10 @ 633 nm

S2 Surface Quality: 10-5 scratch and dig

Diameter Tolerance: Ø +0/–0.25 mm

Thickness Tolerance: t ±0.25 mm

Concentricity: < 0.05 mm

Radius Tolerance:
±0.5% for r ≤ 3.5 m
±1.0% for 3.5 m < r ≤ 8.0 m

Clear Aperture: ≥85% of central diameter

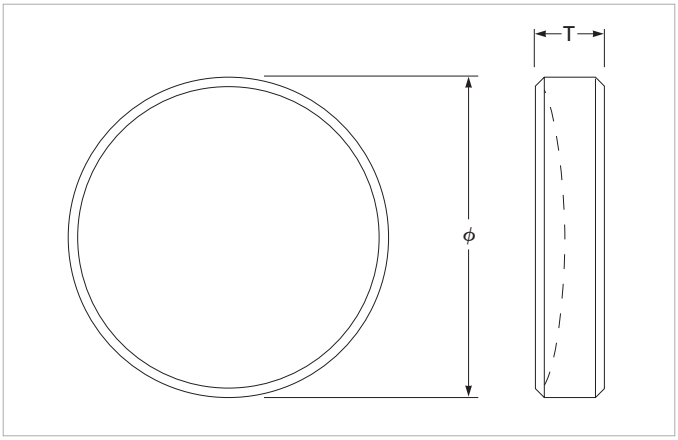

Concave spherical mirror blank

OPTICS & PHOTONICS MARKETPLACE

Standard Products

Ø (mm)	t (mm)	r (m)	PART NUMBER
Concave N-BK7 Spherical Mirror Blanks			
12.7	6.35	0.25	SMCC-0525-0.25-C
12.7	6.35	0.50	SMCC-0525-0.50-C
12.7	6.35	1.00	SMCC-0525-1.00-C
25.4	6.35	0.25	SMCC-1025-0.25-C
25.4	6.35	0.50	SMCC-1025-0.50-C
25.4	6.35	1.00	SMCC-1025-1.00-C
Concave Fused Silica Spherical Mirror Blanks			
12.7	6.35	0.025	SMCC-0525-0.025-UV
12.7	6.35	0.050	SMCC-0525-0.050-UV
12.7	6.35	0.075	SMCC-0525-0.075-UV
12.7	6.35	0.10	SMCC-0525-0.10-UV
12.7	6.35	0.15	SMCC-0525-0.15-UV
12.7	6.35	0.20	SMCC-0525-0.20-UV
12.7	6.35	0.25	SMCC-0525-0.25-UV
12.7	6.35	0.50	SMCC-0525-0.50-UV
12.7	6.35	1.00	SMCC-0525-1.00-UV
12.7	6.35	1.50	SMCC-0525-1.50-UV
12.7	6.35	5.00	SMCC-0525-5.00-UV
25.4	6.35	0.025	SMCC-1025-0.025-UV
25.4	6.35	0.050	SMCC-1025-0.050-UV
25.4	6.35	0.10	SMCC-1025-0.10-UV
25.4	6.35	0.15	SMCC-1025-0.15-UV
25.4	6.35	0.20	SMCC-1025-0.20-UV
25.4	6.35	0.25	SMCC-1025-0.25-UV
25.4	6.35	0.30	SMCC-1025-0.30-UV
25.4	6.35	0.50	SMCC-1025-0.50-UV
25.4	6.35	0.75	SMCC-1025-0.75-UV
25.4	6.35	1.00	SMCC-1025-1.00-UV
25.4	6.35	1.50	SMCC-1025-1.50-UV
25.4	6.35	2.00	SMCC-1025-2.00-UV
25.4	6.35	3.00	SMCC-1025-3.00-UV
25.4	6.35	5.00	SMCC-1025-5.00-UV
25.4	6.35	10.0	SMCC-1025-10.0-UV
50.8	9.53	0.50	SMCC-2037-0.50-UV
50.8	9.53	1.00	SMCC-2037-1.00-UV
50.8	9.53	1.50	SMCC-2037-1.50-UV
50.8	9.53	2.00	SMCC-2037-2.00-UV

PLANE ROUND N-BK7 MIRROR BLANKS

- All CVI Laser Optics partial reflectors, high reflectors, dichroics and metal coatings available.
- Other dimensions or materials available in production and prototype quantities

Specifications

Product Code: PM-C • PM-UV

Substrate Material: N-BK7 glass

S1 Surface Quality: 10-5

S2 Surface Quality: Commercial polish

Diameter Tolerance: Ø +0/–0.25 mm

Thickness Tolerance: t ±0.25 mm

Wedge: ≤5 arc min

Chamfer: 0.35 mm at 45° typical

Clear Aperture: ≥85% of central diameter

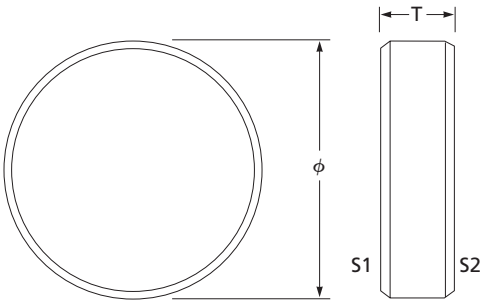

Plane round mirror blank

Standard Products

Ø (mm)	t (mm)	S1 Surface Figure	PART NUMBER
Plane Round BK7 Mirror Blanks			
10.0	3.2	λ/10	PM-0412-C
12.7	3.2	λ/10	PM-0512-C
12.7	6.4	λ/10	PM-0525-C
12.7	9.5	λ/10	PM-0537-C
19.1	3.2	λ/10	PM-0712-C
19.1	6.4	λ/10	PM-0725-C
19.1	9.5	λ/10	PM-0737-C
25.0	6.0	λ/10	PM-2506M-C
25.4	3.18	λ/4	PM-1012-C
25.4	6.4	λ/10	PM-1025-C
25.4	9.5	λ/10	PM-1037-C
38.1	3.2	λ/4	PM-1512-C
38.1	6.4	λ/10	PM-1525-C
38.1	9.5	λ/10	PM-1537-C
50.0	10.0	λ/10	PM-5010M-C
50.8	6.4	λ/4	PM-2025-C
50.8	9.5	λ/10	PM-2037-C
76.2	12.7	λ/10	PM-3050-C
101.6	9.5	λ/10	PM-4037-C
101.6	12.7	λ/10	PM-4050-C
152.4	25.4	λ/10	PM-6010-C

PLANE ROUND FUSED SILICA MIRROR BLANKS

- All CVI Laser Optics partial reflectors, high reflectors, dichroics and metal coatings available.
- Other dimensions or materials available in production and prototype quantities

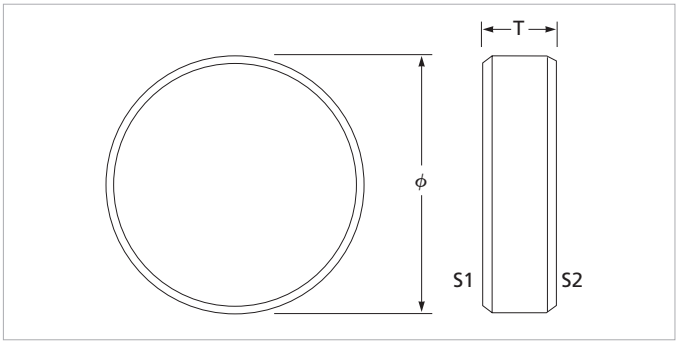

Plane round mirror blank

Specifications

Product Code: PM-UV

Substrate Material: UV-grade fused silica

S1 Surface Quality: 10-5

S2 Surface Quality: Commercial polish

Diameter Tolerance: Ø +0/–0.25 mm

Thickness Tolerance: t ±0.25 mm

Wedge: ≤5 arc min

Chamfer: 0.35 mm at 45° typical

Clear Aperture: ≥85% of central diameter

Standard Products

Ø (mm)	t (mm)	S1 Surface Figure	PART NUMBER
Plane Round Fused Silica Mirror Blanks			
12.7	6.4	λ/10	PM-0525-UV
12.7	9.5	λ/10	PM-0537-UV
19.1	3.2	λ/10	PM-0712-UV
19.1	6.4	λ/10	PM-0725-UV
19.1	9.5	λ/10	PM-0737-UV
25.0	6.0	λ/10	PM-2506M-UV
25.4	3.2	λ/4	PM-1012-UV
25.4	6.4	λ/10	PM-1025-UV
25.4	9.5	λ/10	PM-1037-UV
38.1	3.2	λ/4	PM-1512-UV
38.1	6.4	λ/10	PM-1525-UV
38.1	9.5	λ/10	PM-1537-UV
50.0	10.0	λ/10	PM-5010M-UV
50.8	3.2	λ/4	PM-2012-UV
50.8	6.4	λ/10	PM-2025-UV
50.8	9.5	λ/10	PM-2037-UV
76.2	9.5	λ/10	PM-3037-UV
76.2	12.7	λ/10	PM-3050-UV
101.6	9.5	λ/10	PM-4037-UV
101.6	12.7	λ/10	PM-4050-UV
152.4	25.4	λ/10	PM-6010-UV

CVI Laser Optics

PLANE SQUARE FUSED SILICA N-BK7 MIRROR BLANKS

- Available in N-BK7 and UV-grade fused silica
- All CVI Laser Optics high reflector, partials, dichroics and metal coatings available
- Other dimensions available in production and prototype quantities

Specifications

Product Code: SQM-C • SQM-UV

Substrate Material: N-BK7 glass or UV-grade fused silica

S1 Surface Quality: 10-5 scratch and dig

S2 Surface Quality: Commercial polish

Dimension Tolerance: +0/–0.25 mm

Thickness Tolerance: t ±0.25 mm

Wedge: ≤5 arc min

Chamfer: 0.35 mm at 45° typical

Clear Aperture: ≥85% of central diameter

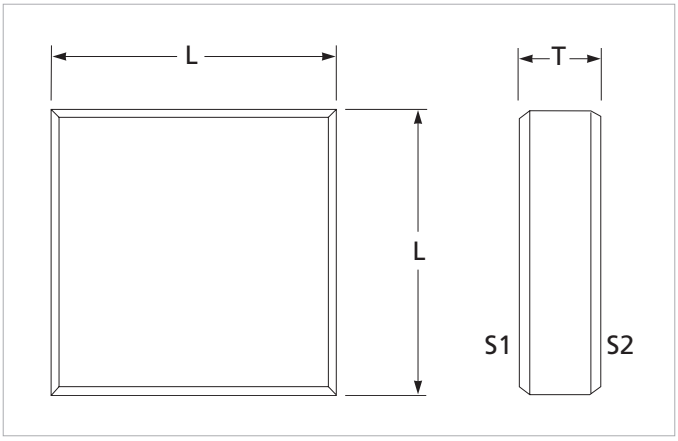

Plane square mirror blank

Standard Products

l (mm)	t (mm)	S1 Surface Figure	PART NUMBER
Plane, Square N-BK7 Mirror Blanks			
12.7	6.35	λ/10	SQM-0525-C
12.7	9.5	λ/10	SQM-0537-C
25.4	2.0	1λ	SQM-1008-C
25.4	6.35	λ/4	SQM-1025-C
25.4	9.5	λ/10	SQM-1037-C
50.8	9.5	λ/4	SQM-2037-C
Plane, Square Fused Silica Mirror Blanks			
12.7	6.35	λ/10	SQM-0525-UV
25.4	6.35	λ/10	SQM-1025-UV
50.8	9.5	λ/10	SQM-2037-UV

IDEX OPTICS & PHOTONICS MARKETPLACE

CVI Laser Optics

PLANE RECTANGULAR FUSED SILICA MIRROR BLANKS

- Available in UV-grade fused silica
- All CVI Laser Optics high reflector, partials, dichroics and metal coatings available
- Other dimensions available in production and prototype quantities

Specifications

Product Code: RM-UV

Substrate Material: UV-grade fused silica

S1 Surface Quality: 10-5 scratch and dig

S2 Surface Quality: Commercial polish

Dimension Tolerance: +0/–0.25 mm

Thickness Tolerance: t ±0.25 mm

Wedge: ≤5 arc min

Chamfer: 0.35 mm at 45° typical

Clear Aperture: ≥85% of central diameter

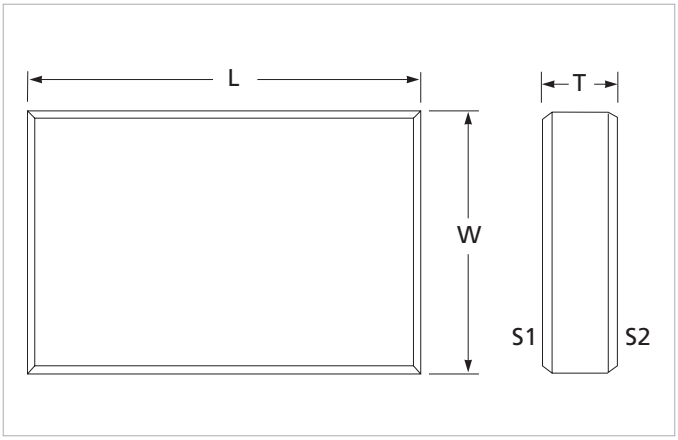

Plane rectangular mirror blank

Standard Products

l (mm)	w (mm)	t (mm)	S1 Surface Figure	PART NUMBER
Plane Rectangular Fused Silica Mirror Blanks				
20	10	6.35	λ/10	RM-20.0-10.0-6.35-UV
35	20	9.53	λ/10	RM-35.0-20.0-9.53-UV
40	25	9.53	λ/10	RM-40.0-25.0-9.53-UV
50	30	12.70	λ/10	RM-50.0-30.0-12.7-UV

BEAMSPLITTERS

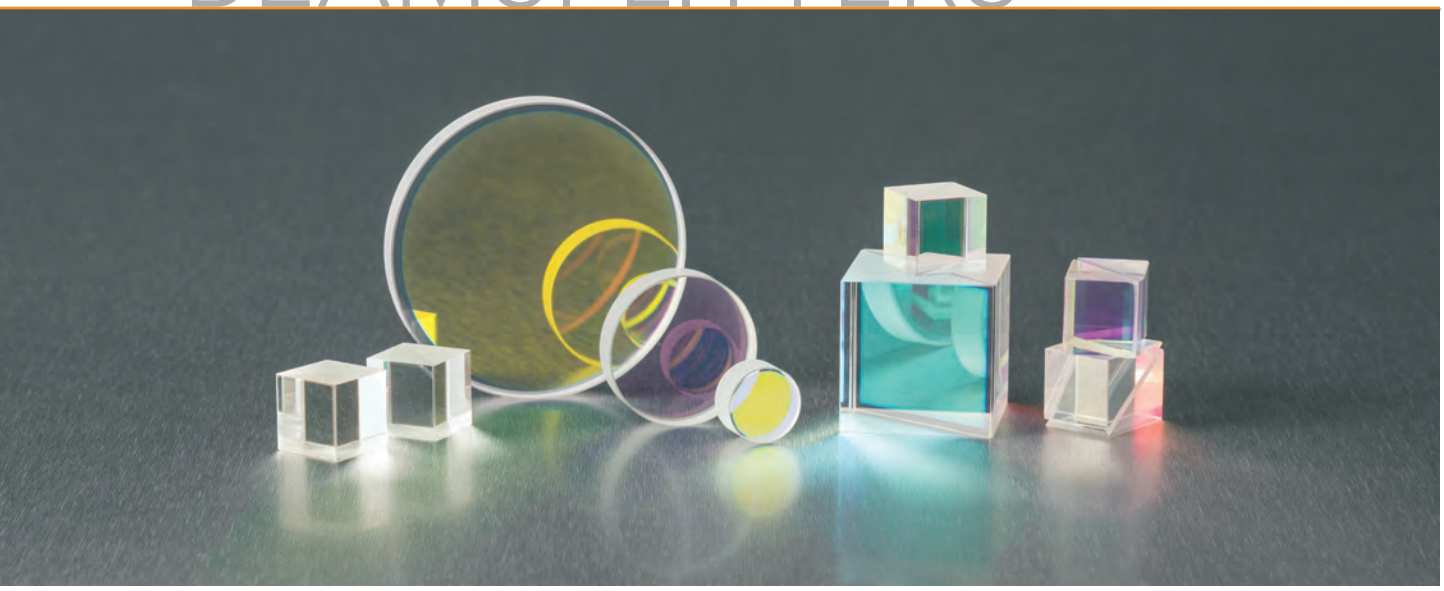

Beamsplitters are optical components designed to separate an incoming beam of light into two separate beams – transmitted and reflected. They are used for a variety of applications such as laser systems, optical interferometry, fluorescence, or other biomedical instrumentation. We offer a large selection of cube and plate beamsplitters to handle a variety of operational requirements. Choosing the correct beamsplitter for your application depends on your power handling needs balanced with your tolerance for beam displacement. Plate beamsplitters offer the best solution for high energy applications, but present disadvantages with beam displacement, satellite beams, and extreme polarization sensitivity. Cube beamsplitters solve the beam displacement problem but because of their bonded surface, are more sensitive to laser damage and still present problems with ghost reflections. Beamsplitter coating options include polarizing coatings, laser line non-polarizing coatings, broadband dielectric coatings, and broadband hybrid coatings.

SELECTION GUIDE 162

PLATE BEAMSPLITTERS 164

LASER LINE CUBE BEAMSPLITTERS 177

BROADBAND CUBE BEAMSPLITTERS 182

CONTINUOUSLY VARIABLE BEAMSPLITTERS 186

SELECTION GUIDE

Product Type	Wavelengths	Operating Conditions	Performance	Page
Plates				
HIGH ENERGY PLATE BEAMSPLITTERS	Center Wavelengths from 193 – 2100 nm	10 J/cm^2, 20 nsec, 20 Hz @ 1064 nm 1 MW/cm^2 @ 1064 nm	R dependent on selected value	164
BROADBAND BEAMSPLITTERS	Wavelenth Range 458 – 529 nm, 488 – 694 nm, 650 – 1100 nm, or 1200 – 1500 nm	10 mJ/cm^2, 20 nsec, 20 Hz @ 1064 nm	R_{unp} = 50% ± 15%	166
STANDARD PLATE BEAMSPLITTERS, ULTRAVIOLET	Center Wavelengths from 250 – 320 nm or 320 – 400 nm	500 mJ/cm^2, 20 nsec, 20 Hz @ 248 nm	Nominal R/T ratio: 50/50	167
STANDARD PLATE BEAMSPLITTERS, VISIBLE	Center Wavelengths from 425 – 750 nm	1 J/cm^2, 20 nsec, 20 Hz @532 nm	Nominal R/T ratio: 30/70, 50/50 or 70/30	168
STANDARD PLATE BEAMSPLITTERS, NEAR INFRARED	Center Wavelengths from 800 – 2100 nm	3 J/cm^2, 20 nsec, 20 Hz @ 1064 nm	Nominal R/T ratio: 30/70, 50/50 or 70/30	168
HIGH ENERGY HARMONIC SEPARATORS	Harmonics for Nd:YAG, Argon and Ti:Sapphire lasers	10 J/cm^2, 20 nsec, 20 Hz @ 1064 nm 1 MW/cm^2 @ 1064 nm	Primary wavelength R Secondary wavelength T	170
LONG WAVE PASS DICHROIC BEAMSPLITTERS	Center wavelength options: 266 nm, 248 nm, 532 nm, 633 nm, 670 nm, 780 nm and 1064 nm	10 J/cm^2, 20 nsec, 20 Hz @ 1064 nm 1 MW/cm^2 @ 1064 nm	Primary wavelength R Secondary wavelength T	172
SHORT WAVE PASS DICHROIC BEAMSPLITTERS	Center wavelength options: 633 nm, 780 nm, 800 nm, 1064 nm, and 1550 nm	10 J/cm^2, 20 nsec, 20 Hz @ 1064 nm 1 MW/cm^2 @ 1064 nm	Primary wavelength R Secondary wavelength T	174
LASER LINE NON-POLARIZING PLATE BEAMSPLITTERS	Center Wavelengths: 532 nm, 633nm, 1064 nm or 1550 nm	3 J/cm^2, 10 nsec, 20 Hz @ 1064 nm	$\lvert R_s–R_p\rvert$, $\lvert T_s–T_p\rvert$ < 5%	176
Cubes				
LASER LINE NON-POLARIZING CUBE BEAMSPLITTERS	Wavelength options: 488/515 nm, 532 nm, 633 nm, 780 nm, 830 nm or 1064 nm	100 mJ/cm^2, 20 nsec, 20 Hz @ 1064 nm	R=50% ± 6% $\lvert R_s–R_p\rvert$, $\lvert T_s–T_p\rvert$ ≤5%	177
UV LASER LINE POLARIZING CUBE BEAMSPLITTERS	Center wavelength options: 248 nm, 257 nm, 266 nm, 308 nm, 351 nm, 355 nm	10 mJ/cm^2, 20 nsec, 20 Hz @ 266 nm 10 W/cm^2 @ 266 nm	Extinction: T_p/T_s > 100:1	178
LASER LINE POLARIZING CUBE BEAMSPLITTERS	Center wavelength options: 532 nm, 633 nm, 670 nm, 780 nm, 532 nm, 633 nm, 670 nm, 780 nm, 1047 nm, 1064 nm and 1550 nm	1 J/cm^2, 20 nsec, 20 Hz @ 1064 nm 100 W/cm^2 @ 1064 nm	Extinction: T_p/T_s > 1000:1	179

IDEX OPTICS & PHOTONICS MARKETPLACE

SELECTION GUIDE

Product Type	Wavelengths	Operating Conditions	Performance	Page
Cubes				
HIGH ENERGY LASER LINE POLARIZING CUBE BEAMSPLITTERS	Center wavelength options: 248 nm, 257 nm, 266 nm, 355 nm, 364 nm, 532 nm and 1064 nm	5 J/cm^2, 20 nsec, 20 Hz @ 1064 nm 1 MW/cm2 @ 1064 nm	λ = 532 nm or 1064 nm: T_p/T_s = 500:1 λ < 500 nm: T_p/T_s = 250:1	180
ION-BEAM SPUTTERED HIGH ENERGY LASER LINE POLARIZING CUBE BEAMSPLITTERS	Center wavelength options: 355 nm, 532 nm and 1064 nm	10 J/cm^2, 20 nsec, 20 Hz @ 1064 nm 1 MW/cm2 @ 1064 nm	λ < 1064 nm: T_p/T_s = 1000:1 λ < 532 nm: T_p/T_s = 750:1 λ < 355 nm: T_p/T_s = 500:1	181
BROADBAND POLARIZING CUBE BEAMSPLITTERS	450 – 700 nm, 450 – 1300 nm, 450 – 2000 or 670 – 980 nm	500 mJ/cm^2, 20 nsec, 20 Hz @ 515 nm 100 W/cm2 @ 515 nm	Extinction: T_p/T_s > 500:1	182
BROADBAND DIELECTRIC CUBE BEAMSPLITTERS, ULTRAVIOLET	250 – 440 nm	500 mJ/cm^2, 20 nsec, 20 Hz @ 515 nm 100 W/cm2 @ 515 nm	50% ± 5% for 280 – 400 nm 45% ± 5% for 250 – 280 nm	183
BROADBAND DIELECTRIC CUBE BEAMSPLITTERS, ULTRAVIOLET	450 – 650 nm	500 mJ/cm^2, 20 nsec, 20 Hz @ 515 nm 100 W/cm2 @ 515 nm	50% ± 5% for average polarization	184
BROADBAND DIELECTRIC CUBE BEAMSPLITTERS, ULTRAVIOLET	650 – 900 nm	500 mJ/cm^2, 20 nsec, 20 Hz @ 515 nm 100 W/cm2 @ 515 nm	50% ± 5% for average polarization	184
BROADBAND HYBRID CUBE BEAMSPLITTERS, ULTRAVIOLET	250 – 400 nm	500 mJ/cm^2, 20 nsec, 20 Hz @ 515 nm 100 W/cm2 @ 515 nm matched to within 5% for both ranges	43% ± 6% for 280 – 400 nm; 38% ± 6% for 250 – 280 nm; *s*- and *p*-components	184
BROADBAND HYBRID CUBE BEAMSPLITTERS, ULTRAVIOLET	450 – 700 nm	500 mJ/cm^2, 20 nsec, 20 Hz @ 515 nm 100 W/cm2 @ 515 nm	45% ± 6%	184
BROADBAND HYBRID CUBE BEAMSPLITTERS, ULTRAVIOLET	700 – 1000 nm	500 mJ/cm^2, 20 nsec, 20 Hz @ 515 nm 100 W/cm2 @ 515 nm	45% ± 6%	184
Assembly				
HIGH ENERGY CONTINUOUSLY VARIABLE BEAMSPLITTER	Standard wavelegnth options: 266 nm, 355 nm, 532 nm and 1064 nm	5 J/cm^2, 20 nsec, 20 Hz @ 1064 nm	Variable Transmission Range 1% – 95% 1MW/cm^2 @ 1064 nm	186

HIGH ENERGY PLATE BEAMSPLITTERS

CVI Laser Optics high energy plate beamsplitters are used to separate a laser beam into two separate beams or to combine beams at right angles to each other. The front surface of the beamsplitter reflects a portion of the incoming beam. The BS1 beamsplitters exhibit almost no absorption and are designed specifically for 45° at the wavelength and polarization being used. Standard substrates have an antireflection coating on the second surface and a wedge of less than five arc minutes. However, the beamsplitter coating can be done on any CVI Laser Optics wedged or plane parallel substrate to meet your OEM application requirements. For pick-off beam samplers see product code W1. For normal incidence beamsplitters, see product code PR1.

- Each face is polished to flatness of λ/10 or better
- Ultrahard, high-damage-threshold coatings are available for wavelengths from 193 nm to 2100 nm
- Internally reflected ghost images are minimized by an antireflection coating on the rear surface
- Transmission curves are supplied with every component

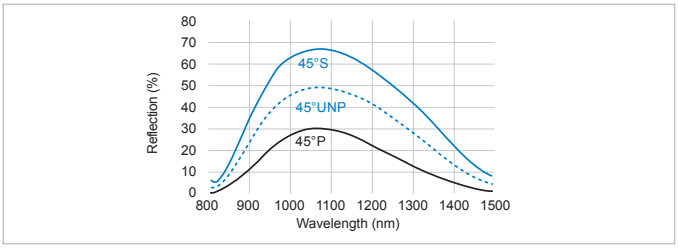

BS1-1064-50-45UNP high energy plate beamsplitter

Specifications

Product Code: BS1

Optical Material: UV-grade fused silica

Surface Figure: λ/10 at 633 nm

Surface Quality: 10-5 scratch and dig

Diameter: Ø+0/–0.25 mm

Thickness: t±0.25 mm

Angle of Incidence: 45°

Wedge: ≤5 arc min

Chamfer: 0.35 mm at 45° (typical)

Adhesion and Durability: Per MIL-C-675C. Insoluble in lab solvents.

Clear Aperture: ≥85% of central diameter

Damage Threshold:
Pulsed: 10 J/cm2, 20 nsec, 20 Hz @ 1064 nm
cw: 1 MW/cm2 @ 1064 nm

Standard Products

Wavelength (nm)	Reflection (%)	Polarization	Incidence Angle	Ø (mm)	t (mm)	PART NUMBER
High Energy Plate Beamsplitters UV Wavelengths						
193	50	UNP	45	50.8	6.35	BS1-193-50-2025-45UNP
248	50	UNP	45	50.8	6.35	BS1-248-50-2025-45UNP
266	50	P	45	25.4	3.175	BS1-266-50-1012-45P
266	50	UNP	45	25.4	3.175	BS1-266-50-1012-45UNP
266	50	UNP	45	50.8	6.35	BS1-266-50-2025-45UNP
266	50	S	45	25.4	3.175	BS1-266-50-1012-45S
High Energy Plate Beamsplitters 355 nm						
355	50	P	45	25.4	3.175	BS1-355-50-1012-45P
355	50	P	45	50.8	6.35	BS1-355-50-2025-45P
355	50	UNP	45	25.4	3.175	BS1-355-50-1012-45UNP
355	50	S	45	25.4	3.175	BS1-355-50-1012-45S
355	99	P	45	25.4	3.175	BS1-355-99-1012-45P

IDEX OPTICS & PHOTONICS MARKETPLACE

Standard Products

Wavelength (nm)	Reflection (%)	Polarization	Incidence Angle	Ø (mm)	t (mm)	PART NUMBER
High Energy Plate Beamsplitters 532 nm						
532	50	P	45	25.4	3.175	BS1-532-50-1012-45P
532	50	P	45	50.8	6.35	BS1-532-50-2025-45P
532	50	UNP	45	25.4	3.175	BS1-532-50-1012-45UNP
532	50	UNP	45	50.8	6.35	BS1-532-50-2025-45UNP
532	50	S	45	25.4	3.175	BS1-532-50-1012-45S
532	50	S	45	50.8	6.35	BS1-532-50-2025-45S
532	99	P	45	25.4	3.175	BS1-532-99-1012-45P
High Energy Plate Beamsplitters 800 nm						
800	10	P	45	25.4	3.175	BS1-800-10-1012-45P
800	10	S	45	25.4	3.175	BS1-800-10-1012-45S
800	10	P	45	50.8	6.35	BS1-800-10-2025-45P
800	30	P	45	25.4	3.175	BS1-800-30-1012-45P
800	50	P	45	25.4	3.175	BS1-800-50-1012-45P
800	50	P	45	50.8	6.35	BS1-800-50-2025-45P
800	50	S	45	25.4	3.175	BS1-800-50-1012-45S
800	50	S	45	50.8	6.35	BS1-800-50-2025-45S
800	70	P	45	25.4	3.175	BS1-800-70-1012-45P
800	70	P	45	50.8	6.35	BS1-800-70-2025-45P
800	80	P	45	25.4	3.175	BS1-800-80-1012-45P
800	90	P	45	25.4	3.175	BS1-800-90-1012-45P
800	90	P	45	50.8	6.35	BS1-800-90-2025-45P
800	95	P	45	25.4	3.175	BS1-800-95-1012-45P
800	98	P	45	25.4	3.175	BS1-800-98-1012-45P
800	99	P	45	25.4	3.175	BS1-800-99-1012-45P
High Energy Plate Beamsplitters 1064 nm						
1064	10	UNP	45	25.4	3.175	BS1-1064-10-1012-45UNP
1064	10	UNP	45	50.8	6.35	BS1-1064-10-2025-45UNP
1064	50	P	45	25.4	3.175	BS1-1064-50-1012-45P
1064	50	P	45	50.8	6.35	BS1-1064-50-2025-45P
1064	50	UNP	45	25.4	3.175	BS1-1064-50-1012-45UNP
1064	50	UNP	45	50.8	6.35	BS1-1064-50-2025-45UNP
1064	50	S	45	25.4	3.175	BS1-1064-50-1012-45S
1064	50	S	45	50.8	6.35	BS1-1064-50-2025-45S
1064	95	UNP	45	50.8	6.35	BS1-1064-95-2025-45UNP
1064	98	UNP	45	50.8	6.35	BS1-1064-98-2025-45UNP
1064	99	UNP	45	50.8	6.35	BS1-1064-99-2025-45UNP

BROADBAND BEAMSPLITTERS

BBS beamsplitter plates can be used to either split or combine a laser beam with a broad bandwidth or multiple beams in the same optical path within a specified wavelength range.

- 50/50 laser splitting
- Low reflection BBAR coating on back surface (S2)
- For cw and low-energy pulsed laser applications

Specifications

Product Code: BBS

Optical Material: N-BK7 glass

Surface Figure: λ/10 at 633 nm

Surface Quality: 10-5 scratch and dig

Diameter: Ø+0/–0.25 mm

Thickness: t±0.25 mm

Wedge: ≤5 arc min

Chamfer: 0.35 mm at 45° (typical)

Coating Technology: Electron beam multilayer dielectric

Adhesion and Durability: Per MIL-C-675C. Insoluble in lab solvents.

Reflection: R_{unp}=50%±15%

Clear Aperture: ≥85% of central diameter

Coating on S2: Low-reflection BBAR coating

Damage Threshold: 100 mJ/cm², 20 nsec, 20 Hz @ 1064 nm

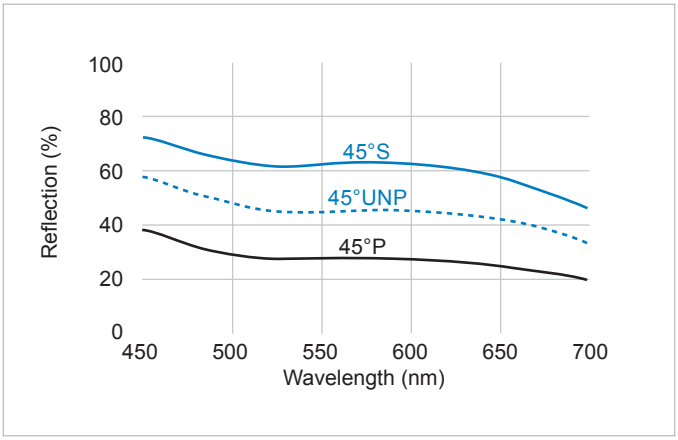

Broadband dielectric beamsplitter for 488 – 694nm

Standard Products

Wavelength Range (nm)	Ø (mm)	t (mm)	PART NUMBER
Broadband Beamsplitters			
488 – 694	25.4	6.35	BBS-488-694-1025-45
488 – 694	50.8	6.35	BBS-488-694-2025-45
650 – 1100	25.4	6.35	BBS-650-1100-1025-45
650 – 1100	50.8	6.35	BBS-650-1100-2025-45

CVI Laser Optics

STANDARD PLATE BEAMSPLITTERS, UV

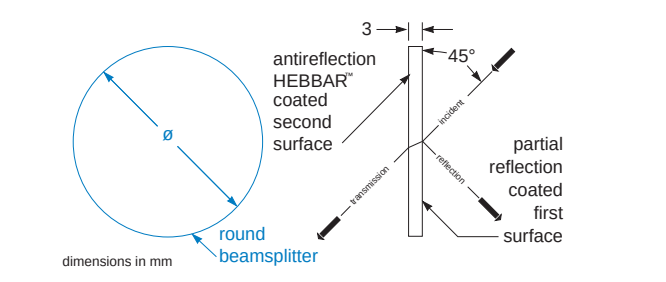

BTQ standard plate beamsplitters

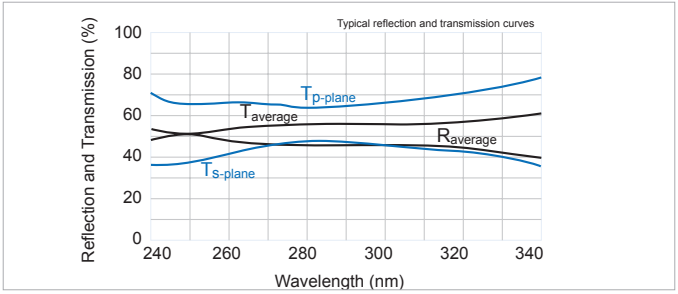

50/50 plate beamsplitter for 250 – 320 nm

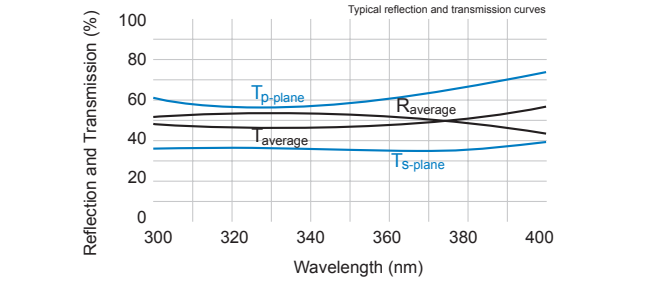

50/50 plate beamsplitter for 320 – 400 nm

Specifications

Product Code: BTQ

Surface Flatness: 1λ at 633 nm

Parallelism:1 arc minute

R/T Tolerance at 45°: ±5%

Clear Aperture: 90% of diameter

Coating, 1st surface: All-dielectric partial reflection coating for 45°, surface marked with a dot,

2nd surface: Antireflection coated for <1.0% reflectance for 45°

Material: Optical quality synthetic fused silica

Angle of Incidence: 45°

Diameter: Ø+0/–0.15 mm

Thickness: 3.0±0.2 mm

Surface Quality: 60-40 scratch and dig, beveled edges

Shape: Round

Standard Products

Wavelength Range (nm)	Ø (mm)	Clear Aperture at 45° (mm)	Nominal R/T Ratio	PART NUMBER
Standard Plate Beamsplitters, Ultraviolet				
250 – 320	25	15.9x22.5	50/50	BTQ-250-320-2503M-UV
320 – 400	25	15.9x22.5	50/50	BTQ-320-400-2503M-UV

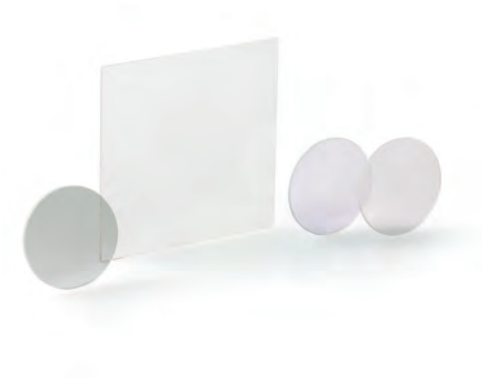

STANDARD PLATE BEAMSPLITTERS, VISIBLE AND NEAR INFRARED

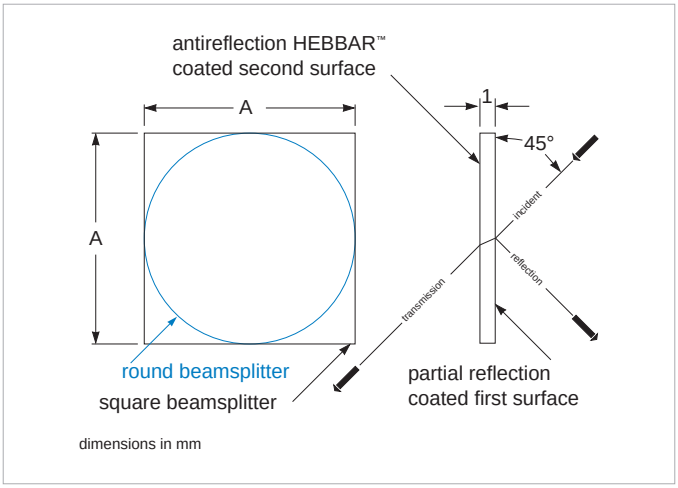

BTF standard plate beamsplitters

Specifications

Product Code: BTF

Parallelism: 5 arc minutes

R/T Tolerance at 45°:
±5% (50 nm from center wavelength range)
±10% (outside of ±50 nm from center wavelength range)

Clear Aperture: 90% of dimension A

Transmitted Wavefront Error: ≤2 λ at 633 nm at 632.8 nm

Coating:
1st surface: All-dielectric partial reflection coating for 45°, surface marked with a dot
2nd Surface: HEBBAR™ for 45°

Material: Optical crown glass

Angle of Incidence: 45°

Dimensions:
Square: A±0.2 mm,
Round: A+0/–0.15 mm

Thickness: 1.0±0.2 mm

Surface Quality: 60-40 scratch and dig beveled edges

Standard Products

A (mm)	Shape	Wavelength Range	Nominal R/T Ratio	Clear Aperture at 45°(mm)	PART NUMBER
Standard Plate Beamsplitters, Visible					
25	Round	Visible	30/70	15.9x22.5	BTF-VIS-30-2501M-C
25	Round	Visible	50/50	15.9x22.5	BTF-VIS-50-2501M-C
25	Round	Visible	70/30	15.9x22.5	BTF-VIS-70-2501M-C
50	Square	Visible	30/70	31.8x45.0	BTF-VIS-30-SQW-5001M-C
50	Square	Visible	50/50	31.8x45.0	BTF-VIS-50-SQW-5001M-C
50	Square	Visible	70/30	31.8x45.0	BTF-VIS-70-SQW-5001M-C
Standard Plate Beamsplitters, Near Infrared					
25	Round	Near IR	30/70	15.9x22.5	BTF-NIR-30-2501M-C
25	Round	Near IR	50/50	15.9x22.5	BTF-NIR-50-2501M-C
25	Round	Near IR	70/30	15.9x22.5	BTF-NIR-70-2501M-C
50	Square	Near IR	30/70	31.8x45.0	BTF-NIR-30-SQW-5001M-C
50	Square	Near IR	50/50	31.8x45.0	BTF-NIR-50-SQW-5001M-C
50	Square	Near IR	70/30	31.8x45.0	BTF-NIR-70-SQW-5001M-C

1-505-298-2550
OPTICS & PHOTONICS MARKETPLACE

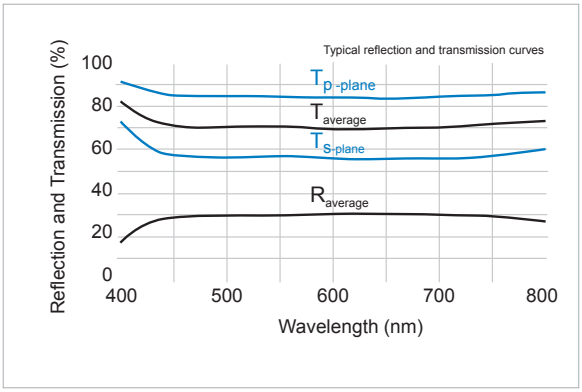

30/70 plate beamsplitter for visible wavelengths

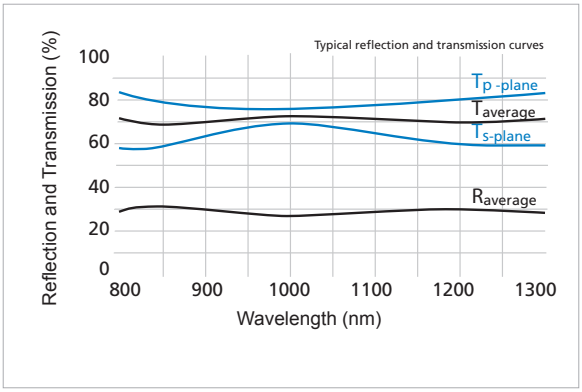

30/70 plate beamsplitter for near-IR wavelengths

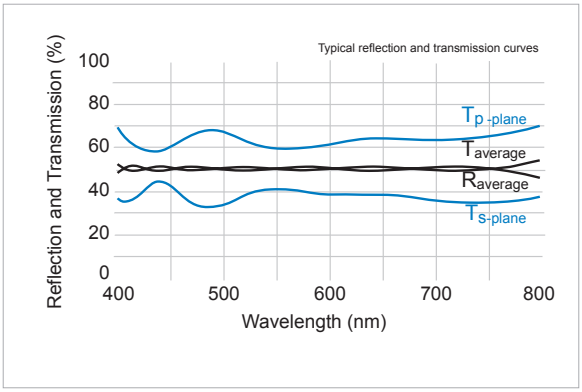

50/50 plate beamsplitter for visible wavelengths

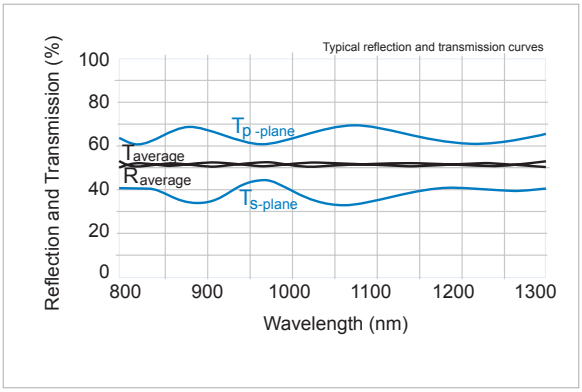

50/50 plate beamsplitter for near-IR wavelengths

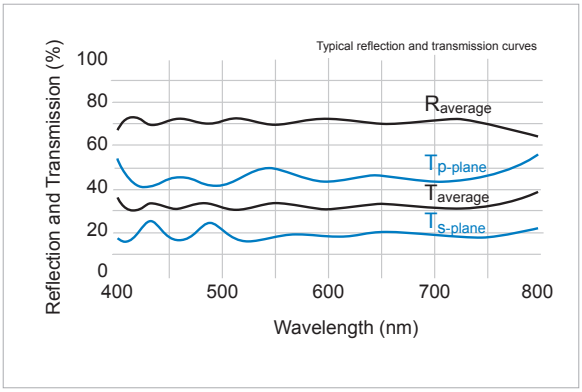

70/30 plate beamsplitter for visible wavelengths

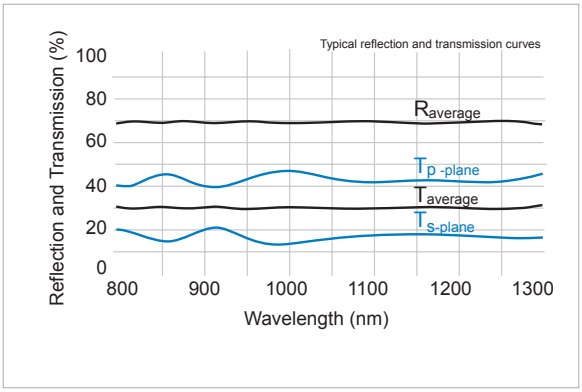

70/30 plate beamsplitter for near-IR wavelegnths

Specifications

Product Code: BSR

Optical Material: If λ_1 or λ_2< 450 nm: UV-grade fused silica, If λ_1 or λ_2 ≥ 450 nm: N-BK7 glass

Surface Figure: λ/10 at 633 nm before coating

Surface Quality: 10-5 scratch and dig

Diameter: Ø+0/–0.25 mm

Thickness: t±0.25 mm

Wedge: ≤5 arc min

Chamfer: 0.35 mm at 45° (typical)

Coating Technology: Electron beam multilayer dielectric

Antireflection Coating: R≤0.25%

Adhesion and Durability: Per MIL-C-675C. Insoluble in lab solvents.

Transmitted Wavefront Error: λ/4 at 633 nm

Clear Aperture: ≥85% of central dimension

Damage Threshold:
Pulsed:
10 J/cm², 20 nsec, 20 Hz for reflection @ 1064 nm,
4 J/cm², 20 nsec, 20 Hz; for reflection @ 532 nm,
4 J/cm², 20 nsec, 20 Hz for transmission @ 1064 nm
cw: 1 MW/cm² @ 1064 nm and 532 nm

HIGH ENERGY HARMONIC SEPARATORS

High energy harmonic separators are used to reflect a laser's primary or harmonic wavelength while transmitting another. Our standard High Energy Harmonic Separators are designed for the Nd:YAG and Ti:Sapphire laser systems. These beamsplitters are coated on the front surface with a high energy dichroic coating designed to reflect the wavelength of interest ≥99.5% and transmit another wavelength ≥90%. A high energy antireflection coating is applied to the rear surface of the harmonic separator at the transmitted wavelength.

A typical example would be our BSR-51-1025 high energy harmonic separator, which reflects the second Nd:YAG harmonic of 532 nm, and transmits the primary 1064 nm wavelength.

For other OEM beamsplitter options or applications please contact CVI Laser Optics for assistance.

- Isolates Nd:YAG and Nd:YLF harmonics
- 2nd, 3rd, 4th, and 5th harmonic separation
- Characterization of collagen orientation in human dermis by two-dimensional second-harmonic-generation polarimetry
- 45° dichroic beamsplitters
- High energy all dielectric coating design, AR coated on side 2

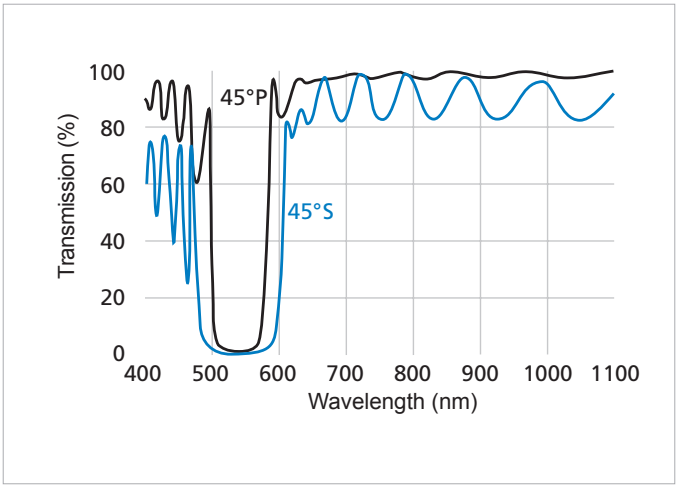

BSR-51-1025 high energy harmonic seperator

Standard Products

Reflected Wavelength (nm)	Transmitted Wavelength Range (nm)	Unpolarized Reflection (%)	Unpolarized Transmission (%)	Antireflection Coating λ	Ø (mm)	t (mm)	PART NUMBER
Reflect 266 nm, Transmit 532 nm and 1064 nm — AR Coating Optimized for 532 nm							
266	532/1064	99.5	90	532	25.4	6.35	BSR-25-1025
Reflect 266 nm, Transmit 532 nm and 1064 nm — AR Coating Optimized for 1064 nm							
266	532/1064	99.5	90	1064	25.4	6.35	BSR-21-1025
Reflect 355 nm, Transmit 532 nm and 1064 nm — AR Coating Optimized for 532 nm							
355	532/1064	99.5	90	532	12.7	6.35	BSR-35-0525
355	532/1064	99.5	90	532	25.4	6.35	BSR-35-1025
Reflect 355 nm, Transmit 532 nm and 1064 nm — AR Coating Optimized for 1064 nm							
355	532/1064	99.5	90	1064	25.4	6.35	BSR-31-1025
355	532/1064	99.5	90	1064	50.8	6.35	BSR-31-2025
Reflect 400 nm, Transmit 800 nm — AR Coating Optimized for 800 nm							
400	800	99.5	90	800	25.4	6.35	BSR-48-1025
400	800	99.5	90	800	50.8	6.35	BSR-48-2025
Reflect 532 nm, Transmit 1064 nm — AR Coating Optimized for 1064 nm							
532	1064	99.5	90	1064	12.7	6.35	BSR-51-0525
532	1064	99.5	90	1064	25.4	6.35	BSR-51-1025
532	1064	99.5	90	1064	50.8	6.35	BSR-51-2025
Reflect 800 nm, Transmit 400 nm — AR Coating Optimized for 400 nm							
800	400	99.5	90	400	25.4	6.35	BSR-84-1025
800	400	99.5	90	400	50.8	6.35	BSR-84-2025
Reflect 1064 nm, Transmit 532 nm — AR Coating Optimized for 532 nm							
1064	532	99.5	90	532	12.7	6.35	BSR-15-0525
1064	532	99.5	90	532	25.4	6.35	BSR-15-1025
1064	532	99.5	90	532	50.8	6.35	BSR-15-2025

CVI Laser Optics

LONG WAVE PASS DICHROIC BEAMSPLITTERS

Long wave pass dichroic beamsplitters exhibit high transmission for a long wavelength band, high damage thresholds, and high reflectivity for a shorter band of wavelengths.

Reflectivity bandwidth is limited by coating design, incidence angle, and polarization.

- Fluorescence microscopy
- Optical parametric generation
- Contact CVI Laser Optics for OEM capablities
- Reflectance is centered for 45° *p*-polarization to assure optimal reflectance center wavelength
- Any polarization can be used; however, to maximize efficiency, reflect 45° *s*-polarized and transmit 45° *p*-polarized

Specifications

Product Code: LWP

Optical Material: UV-grade fused silica

Surface Figure: λ/10 at 633 nm before coating

Surface Quality: 10-5 scratch and dig

Diameter: Ø+0/–0.25 mm

Thickness: t±0.25 mm

Wedge: ≤5 arc min

Chamfer: 0.35 mm at 45° (typical)

Coating Technology: Electron beam multilayer dielectric

Antireflection Coating:
$R_p \leq 0.25\%$ @ 45°
$R_{unp} \leq 0.75\%$ @ 45°
$R_s \leq 1.3\%$ @ 45°

Adhesion and Durability: Per MIL-C-675C. Insoluble in lab solvents.

Reflection Average Transmission: R ≥ 99.0% for Unpolarized light, >85% in long wave pass to 2200 nm

Clear Aperture: ≥85% of central dimension

Damage Threshold:
Pulsed: 10 J/cm², 20 nsec, 20 Hz @ 1064 nm
cw: 1 MW/cm² @ 1064 nm

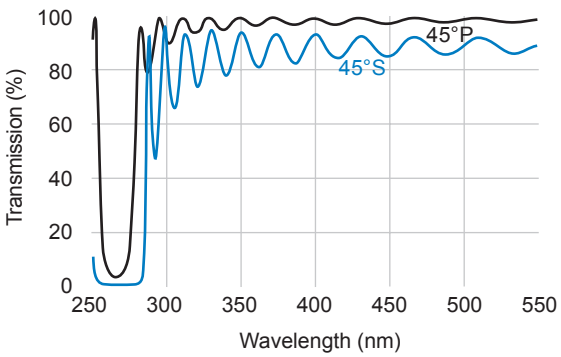

Long wave pass dichroic beamsplitter at 45° incidence angle

IDEX OPTICS & PHOTONICS MARKETPLACE

Standard Products

Reflected Wavelength (nm)	Transmitted Wavelength Range (nm)	Unpolarized Reflection (%)	Unpolarized Transmission (%)	Antireflection Coating λ	∅ (mm)	t (mm)	PART NUMBER
Long Wave Pass Dichroic Beamsplitters							
266	400	≥99.0	≥85.0	400	25.4	3.175	LWP-45-RP266-TU400-PW1-1012-UV
266	400	≥99.0	≥85.0	400	50.8	6.35	LWP-45-RP266-TU400-PW1-2025-UV
266	800	≥99.0	≥85.0	800	25.4	3.175	LWP-45-RP266-TU800-PW1-1012-UV
266	800	≥99.0	≥85.0	800	50.8	6.35	LWP-45-RP266-TU800-PW1-2025-UV
266	1064/532	≥99.0	≥85@532 & 1064 nm	1064/532	25.4	3.175	LWP-45-RP266-TU1064/532-PW1-1012-UV
266	355 – 532	≥99.0	≥85.0	355 – 532	25.4	3.175	LWP-45-RP266-TU355-532-PW1-1012-UV
532	633 – 1064	≥99.0	≥85.0	633 – 1064	25.4	3.175	LWP-45-RP532-TU633-1064-PW1-1012-UV
532	633 – 1064	≥99.0	≥85.0	633 – 1064	50.8	6.35	LWP-45-RP532-TU633-1064-PW1-2025-UV
633	800	≥85.0	≥90	800	25.4	3.175	LWP-45-RP633-TU800-PW1-1012-UV
670	800	≥99.0	≥85.0	800	25.4	3.175	LWP-45-RP670-TU800-PW1-1012-UV
780	1550	≥99.0	≥85.0	1550	25.4	3.175	LWP-45-RP780-TU1550-PW1-1012-UV
1064	1550	≥99.0	≥85.0	1550	25.4	3.175	LWP-45-RP1064-TU1550-PW1-1012-UV

SHORT WAVE PASS DICHROIC BEAMSPLITTERS

Short wave pass dichroic beamsplitters exhibit high transmission for a short wavelength band, high damage thresholds, and high reflectivity for a longer band of wavelengths.

Reflectivity bandwidth is limited by coating design, incidence angle, and polarization. For high energy laser applications, specify pulse energy, pulse duration, repetition rate, and beam diameter.

- Fluorescence microscopy
- Optical parametric generation
- Contact CVI Laser Optics for OEM capablities
- Reflectance is centered for 45° *p*-polarization to assure optimal reflectance center wavelength
- Any polarization can be used; however, to maximize efficiency, reflect 45° *s*-polarized and transmit 45° *p*-polarized

Specifications

Product Code: SWP

Optical Material: UV-grade fused silica

Surface Figure: λ/10 at 633 nm before coating

Surface Quality: 10-5 scratch and dig

Diameter: Ø=0/–0.25 mm

Thickness: t±0.25 mm

Wedge: ≤5 arc min

Chamfer: 0.35 mm at 45° (typical)

Coating Technology: Electron beam multilayer dielectric

Antireflection Coating:
$R_p \leq 0.25\%$ @ 45°
$R_{unp} \leq 0.75\%$ @ 45°
$R_s \leq 1.3\%$ @ 45°

Adhesion and Durability: Per MIL-C-675C. Insoluble in lab solvents.

Reflection: R≥99.0% for Unpolarized light

Average Transmission: >80% in short wave pass

Clear Aperture: ≥85% of central dimension

Damage Threshold:
Pulsed: 10 J/cm^2, 20 nsec, 20 Hz @ 1064 nm
cw: 1 MW/cm^2 @ 1064 nm

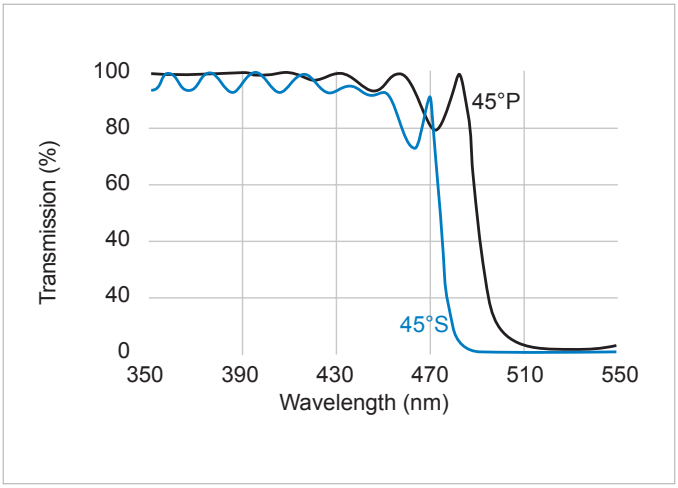

Short wave pass dichroic beamsplitter at 45° incidence angle

Standard Products

Reflected Wavelength (nm)	Transmitted Wavelength Range (nm)	Unpolarized Reflection (%)	Unpolarized Transmission (%)	Antireflection Coating λ	Ø (mm)	t (mm)	PART NUMBER
Short Wave Pass Dichroic Beamsplitters							
633	355 – 532	≥ 99.0	≥ 80	355 – 532	25.4	3.175	SWP-45-RP633-TU355-532-PW1-1012-UV
780	415 – 700	≥ 99.0	≥ 80	415 – 700	25.4	3.175	SWP-45-RP780-TU415-700-PW1-1012-UV
800	532	≥ 99.0	≥ 80	532.0	25.4	3.175	SWP-0-R800-T532-PW1-1012-UV
800	532	≥ 99.0	≥ 80	532.0	25.4	3.175	SWP-45-RP800-TU532-PW1-1012-UV
800	532	≥ 99.0	≥ 80	532.0	50.8	6.35	SWP-45-RP800-TU532-PW1-2025-UV
1064	415 – 700	≥ 99.0	≥ 80	415 – 700	25.4	3.175	SWP-0-R1064-T415-700-PW1-1012-UV
1064	415 – 700	≥ 99.0	≥ 80	415 – 700	12.7	3.175	SWP-45-RP1064-TU415-700-PW1-0512-UV
1064	415 – 700	≥ 99.0	≥ 80	415 – 700	25.4	3.175	SWP-45-RP1064-TU415-700-PW1-1012-UV
1064	415 – 700	≥ 99.0	≥ 80	415 – 700	50.8	6.35	SWP-45-RP1064-TU415-700-PW1-2025-UV
1064	700 – 900	≥ 99.0	≥ 80	700 – 900	25.4	3.175	SWP-0-R1064-T700-900-PW1-1012-UV
1064	700 – 900	≥ 99.0	≥ 80	700 – 900	25.4	3.175	SWP-45-RP1064-TU700-900-PW1-1012-UV
1550	780	≥ 99.0	≥ 80	780.0	25.4	3.175	SWP-45-RP1550-TU780-PW1-1012-UV

CVI Laser Optics

LASER LINE NON-POLARIZING PLATE BEAMSPLITTERS

CVI Laser Optics all dielectric 45° non-polarizing plate beamsplitters divide laser energy while preserving input polarization in reflected and transmitted beams. With 3 J/cm² damage threshold, these non-polarizing beamsplitter plates are especially useful for high energy applications where cemented beamsplitter cubes may fail.

Plate beamsplitters are thinner and lighter than cube beamsplitters. This may be required in some applications where there is not enough room for a cube.

- 50% reflection
- $|R_s - R_p| < 5\%$
- Damage threshold > 3 J/cm²
- Cement free
- Contact CVI Laser Optics for your OEM requirements

Specifications

Product Code: BSNP

Optical Material: N-BK7 glass

Surface Quality: 10-5 scratch and dig

Diameter: Ø+0/–0.25 mm

Thickness: t±0.25 mm

Angle of Incidence: 45°

Coating Technology: Electron beam multilayer dielectric

Adhesion and Durability: Per MIL-C-675C

Transmitted Wavefront Error: λ/10 at 633 nm

$|R_s–R_p|$, $|T_s–T_p|$: <5%

Clear Aperture: ≥85% of central dimension

Damage Threshold: 3 J/cm², 10 nsec pulse @ 1064 nm

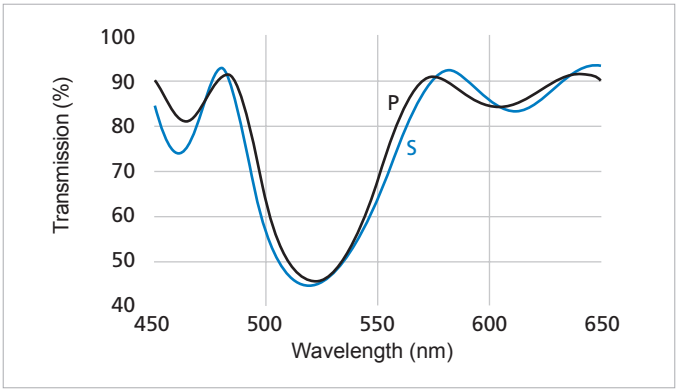

BSNP-532-50-1025 non-polarizing plate beamsplitter

Standard Products

Wavelength (nm)	Ø (mm)	t (mm)	Reflection (%)	PART NUMBER
Laser Line Non-polarizing Plate Beamsplitters				
532	25.4	6.35	50±5%	BSNP-532-50-1025
532	50.8	6.35	50±5%	BSNP-532-50-2025
1064	25.4	6.35	50±5%	BSNP-1064-50-1025
1064	50.8	6.35	50±5%	BSNP-1064-50-2025

IDEX OPTICS & PHOTONICS MARKETPLACE

CVI Laser Optics

LASER LINE NON-POLARIZING CUBE BEAMSPLITTERS

Non-polarizing cube beamsplitters divide a single wavelength into nearly equal reflected and transmitted beams. CVI Laser Optics nonpolarizing coating reduces $|R_s–R_p|$ and $|T_s–T_p|$ from 35% to less than 5% for popular visible and near infrared laser wavelengths. The cemented cube beamsplitters feature low absorption dielectric coatings deposited on λ/4, 20-10 N-BK7 prisms.

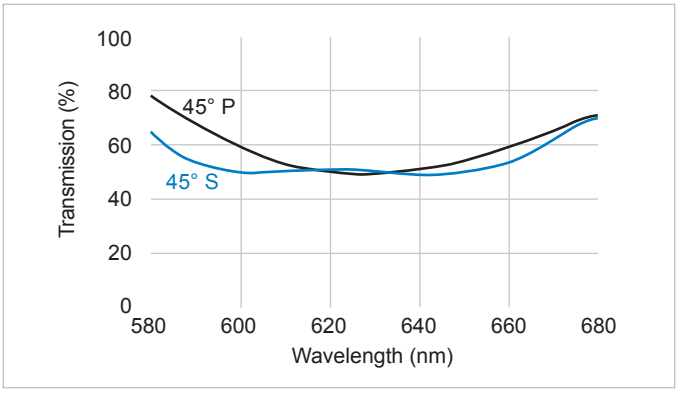

NCBS-633 laser line non-polarizing cube beamsplitters

Specifications

Product Code: NCBS

Optical Material: N-BK7 glass

Surface Quality: 20-10 scratch and dig

Edge Dimension: A±0.25 mm

Coating Technology: Electron beam multilayer dielectric

Antireflection Coating: R≤0.25%

Adhesion and Durability: Per MIL-C-675C. Insoluble in lab solvents.

Reflection: 50%±5%

Transmitted Wavefront Error: λ/4 at 633 nm

$|R_s – R_p|$, $|T_s – T_p|$: ≤5%

Clear Aperture: ≥85% of central dimension

Damage Threshold: > 100 mJ/cm², 20 nsec, 20 Hz @ 532 nm

Standard Products

Wavelength Range (nm)	A (mm)	PART NUMBER
Laser Line Non-polarizing Cube Beamsplitters		
532	12.7	NCBS-532-050
532	25.4	NCBS-532-100
633	12.7	NCBS-633-050
633	25.4	NCBS-633-100
780	12.7	NCBS-780-050
780	25.4	NCBS-780-100
1064	12.7	NCBS-1064-050
1064	25.4	NCBS-1064-100

CVI Laser Optics

UV LASER LINE POLARIZING CUBE BEAMSPLITTERS

These polarizing cube beamsplitters are made from UV grade fused silica to improve UV performance.

To avoid damage when using a laser, be sure to orient the cube so that the beam enters through the prism marked with the dot.

- For use with fluences less than 10 mJ/cm^2
- Optical adhesive contact
- Contact CVI Laser Optics for alternate wavelengths or dimensions for OEM capabilities

Specifications

Product Code: UPBS

Optical Material: UV-grade fused silica

Edge Dimension: A±0.25 mm

Surface Quality: 20-10 scratch and dig

Transmitted Wavefront Error: λ/4 at 633 nm

Extinction Ratio: T_p/T_s > 100:1

Transmission Efficiency: T_p > 90.0%

Reflection Efficiency: R_s > 99.0%

Clear Aperture: ≥ 85% of central dimension

Field of View: ±2° typical

Damage Threshold:
Pulsed: 10 mJ/cm^2, 20 nsec, 20 Hz @ 266 nm
cw: 10 W/cm^2 @ 266 nm

Antireflection Coating: R ≤ 0.25%, all entrance and exit surfaces

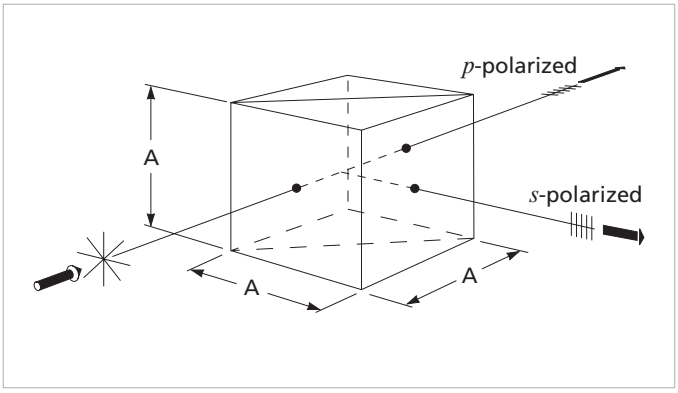

UPBS UV laser line polarizing beamsplitter cubes

Standard Products

Wavelength (nm)	A (mm)	PART NUMBER
UV Laser Line Polarizing Cube Beamsplitters, 12.7 mm Cube		
248	12.7	UPBS-248-050
266	12.7	UPBS-266-050
355	12.7	UPBS-355-050
405	12.7	UPBS-405-050
UV Laser Line Polarizing Cube Beamsplitters, 25.4 mm Cube		
248	25.4	UPBS-248-100
266	25.4	UPBS-266-100
355	25.4	UPBS-355-100
405	25.4	UPBS-405-100

IDEX OPTICS & PHOTONICS MARKETPLACE

CVI Laser Optics

LASER LINE POLARIZING CUBE BEAMSPLITTERS

Polarizing beamsplitter cubes are used to split a laser beam into two orthogonally polarized components; *p*-polarization is transmitted straight through while *s*-polarization is reflected at 90°.

To avoid damage when using a high power laser, be sure to orient the cube so that the beam enters through the prism face marked with the dot.

- Projection systems, signal monitoring, color separation and recombination, optical coupling
- Fewer ghost images than plate beamsplitters
- Optical adhesive contact
- 1000:1 extinction ratio

Specifications

Product Code: PBS

Optical Material: N-BK7 glass

Surface Quality: 20-10 scratch and dig

Antireflection Coating: R ≤ 0.25% per surface

Extinction Ratio: T_p/T_s > 1000:1

Reflection: R_s > 99.9%

Transmission: T_p > 95%

Transmitted Wavefront Error:
A ≤ 1.0 in.: λ/4 @ 633 nm,
A > 1.0 in.: λ/2 @ 633 nm

Field of View: ±3°

Clear Aperture: ≥ 85% of central dimension

Damage Threshold:
Pulsed: 1 J/cm², 20 ns, 20 Hz @ 1064 nm
cw: 100 W/cm² @ 515 nm

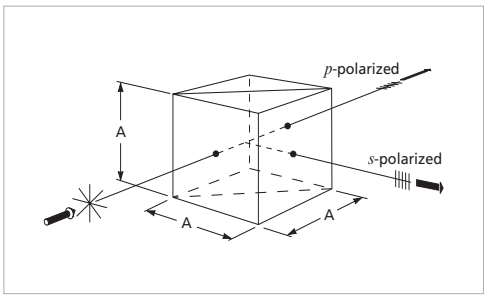

PBS laser line polarizing beamsplitter cubes

Standard Products

Wavelength (nm)	A (mm)	PART NUMBER
Standard Laser Line Polarizing Cube Beamsplitters 12.7 mm Cube		
532	12.7	PBS-532-050
633	12.7	PBS-633-050
780	12.7	PBS-780-050
800	12.7	PBS-800-050
810	12.7	PBS-810-050
830	12.7	PBS-830-050
850	12.7	PBS-850-050
1030	12.7	PBS-1030-050
1047	12.7	PBS-1047-050
1064	12.7	PBS-1064-050
1550	12.7	PBS-1550-050
Standard Laser Line Polarizing Cube Beamsplitters 25.4 mm Cube		
532	25.4	PBS-532-100
633	25.4	PBS-633-100
780	25.4	PBS-780-100
800	25.4	PBS-800-100
1064	25.4	PBS-1064-100

CVI Laser Optics

HIGH ENERGY LASER LINE POLARIZING CUBE BEAMSPLITTERS

CVI Laser Optics high-energy polarizing cube coatings are designed for maximum extinction ratio (T_p/T_s).

To avoid damage when using a high power laser, be sure to orient the cube so that the beam enters through the prism marked with the dot.

- Optically contacted
- Reflected and transmitted beams separated by 90°
- Contact CVI Laser Optics for OEM opportunities for other wavelengths from UV to near IR

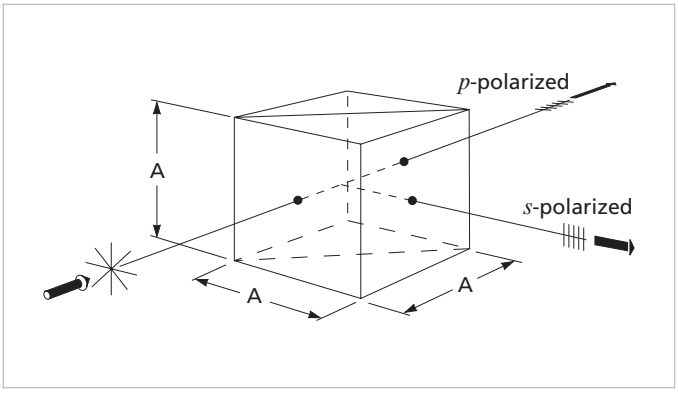

PBSO high energy laser line polarizing beamsplitter cubes

Specifications

Product Code: PBSO

Optical Material: UV-grade fused silica

Edge Dimension: A±0.25 mm

Surface Quality: 20-10 scratch and dig

Transmitted Beam Deviation: < 5 arc min

Transmitted Wavefront Error: λ/4 at 633 nm

Extinction Ratio: λ=532 nm or 1064 nm: T_p/T_s > 500:1, λ < 500 nm: T_p/T_s > 250:1

Transmission Efficiency: T_p > 95%

Reflection Efficiency: λ > 500 nm: R_s > 99.5%, λ ≤ 500 nm: R_s > 99.0%

Clear Aperture: ≥ 85% of central dimension

Damage Threshold:
Pulsed 5 J/cm^2, 20 nsec, 20 Hz @ 1064 nm
cw: 1 MW/cm^2 @ 1064 nm

Antireflection Coating: R ≤ 0.25%, all entrance and exit surfaces

Standard Products

Wavelength (nm)	A (mm)	PART NUMBER
High Energy Laser Line Polarizing Cube Beamsplitters 12.7 mm Cube		
266	12.7	PBSO-266-050
355	12.7	PBSO-355-050
532	12.7	PBSO-532-050
1064	12.7	PBSO-1064-050
High Energy Laser Line Polarizing Cube Beamsplitters 25.4 mm Cube		
266	25.4	PBSO-266-100
355	25.4	PBSO-355-100
532	25.4	PBSO-532-100
1064	25.4	PBSO-1064-100

IDEX OPTICS & PHOTONICS MARKETPLACE

ADVANCED THIN FILMS

ION BEAM SPUTTERED HIGH ENERGY LASER LINE POLARIZING CUBE BEAMSPLITTERS

Ion Beam Sputtered High Energy Laser Line Polarizing Cube Beamsplitters are derived from a unique combination of IBS coatings, ultraprecise fabrication capabilities and our patent-pending, epoxy-free bonding technology Chemically Activated Direct Bonding™ (CADB®) which results in a zero-bondline thickness.

- Chemically Activated Direct Bonding™ (CADB®)
- Reflected and transmitted beams separated by 90°
- Contact CVI Laser Optics for more information

Specifications

Product Code: PBSI

Optical Material: UV-grade fused silica

Edge Dimension: A±0.25 mm

Surface Quality: 10-5 scratch and dig

Transmitted Beam Deviation: < 3 arc min

Transmitted Wavefront Error: λ/10 transmitted, λ/4 reflected

Clear Aperture: ≥ 85% of central dimension

Antireflection Coating: R ≤ 0.20%, all entrance and exit surfaces

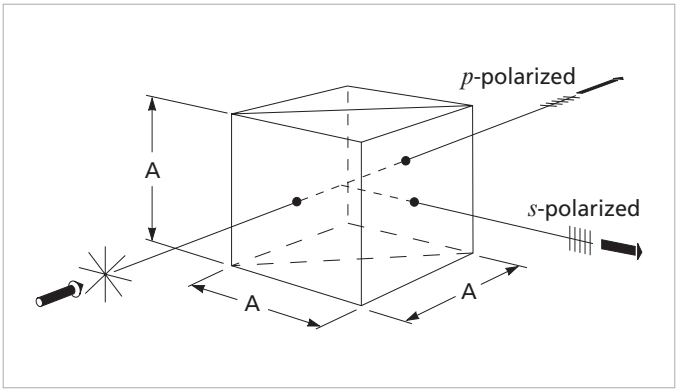

PBSI ion beam sputtered high energy laser line polarizing beamsplitter cubes

Standard Products

Wavelength (nm)	A (mm)	$T_{p\text{-}pol}$	Extinction Ratio T_p/T_s	Damage Threshold	PART NUMBER
Ion Beam Sputtered High Energy Laser Line Polarizing Cube Beamsplitters					
355	12.7	> 95.0%	> 500:1	2 J/cm² @ 355 nm	PBSI-355-050
532	12.7	> 96.0%	> 750:1	4 J/cm² @ 532 nm	PBSI-532-050
1064	12.7	> 97.0%	> 1000:1	10 J/cm² @ 1064 nm	PBSI-1064-050

CVI Laser Optics

VISIBLE AND NEAR-IR BROADBAND POLARIZING CUBE BEAMSPLITTERS

These broadband polarizing beamsplitter cubes are made from N-SF2 glass to improve broadband performance.

To avoid damage when using a laser, be sure to orient the cube so that the beam enters through the prism marked with the dot.

- Optical adhesive contact
- Contact CVI Laser Optics for other wavelengths from UV to NIR

Specifications

Product Code: PBSH

Optical Material: N-SF2 glass

Transmission Efficiency (T_p avg): 90%

Edge Dimension: A±0.25 mm

Surface Quality: 20-10 scratch and dig

Transmitted Wavefront Error: λ/4 at 633 nm

Extinction Ratio: T_p/T_s>500:1

Reflection Efficiency: R_s > 99.5%

Clear Aperture: ≥ 85% of central dimension

Field of View: ±2.5°

Damage Threshold:
Pulsed 500 mJ/cm^2, 20 nsec, 20 Hz @ 515 nm
cw: 100 W/cm^2 @ 515 nm

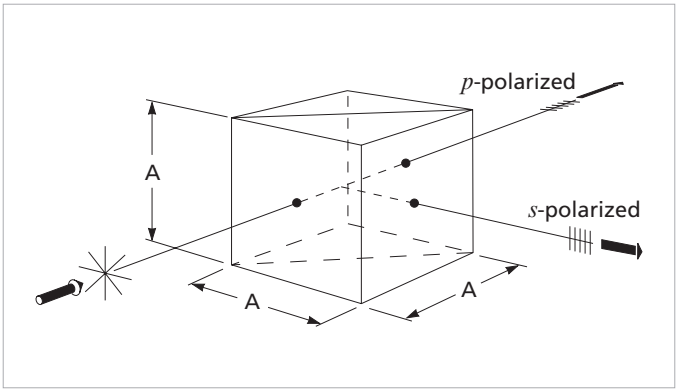

PBSH broadband polarizing cube beamsplitters

Standard Products

Wavelength Range (nm)	A (mm)	R_{avg}	PART NUMBER
Visible and Near-IR Broadband Polarizing Cube Beamsplitters 12.7 mm Cube			
450 – 700	12.7	<0.5%	PBSH-450-700-050
450 – 1300	12.7	<2.5%	PBSH-450-1300-050
450 – 2000	12.7	<3.0%	PBSH-450-2000-050
670 – 980	12.7	<0.5%	PBSH-670-980-050
Visible and Near-IR Broadband Polarizing Cube Beamsplitters 25.4 mm Cube			
450 – 700	25.4	<0.5%	PBSH-450-700-100
450 – 1300	25.4	<2.5%	PBSH-450-1300-100
450 – 2000	25.4	<3.0%	PBSH-450-2000-100
670 – 980	25.4	<0.5%	PBSH-670-980-100

CVI Laser Optics

UV BROADBAND DIELECTRIC CUBE BEAMSPLITTERS

BSD beamsplitter cubes can be used to either split or combine a laser beam with a broad bandwidth or multiple beams in the same optical path within a specified wavelength range. A durable all-dielectric multilayer coating design is used for neutral splitting of unpolarized visible or near-infrared light at a convenient 90° angle. Broadband antireflection coatings are on the cube faces to reduce secondary reflections and ghost images.

- Optical adhesive contact

Specifications

Product Code: BSD

Transmission: 50%±5% for 280–400 nm wavelength range, 45%±5% for 250–280 nm wavelength range

Surface Flatness: λ/4 per clear aperture at 632.8 nm

Transmitted Beam Deviation: <10 arc minutes

Absorption: <10%

Coating: <1% reflectance (entrance and exit faces)

Material: UV-grade synthetic fused silica

Edge Dimensions: A±0.3 mm

Surface Quality: 40-20 scratch and dig, beveled edges

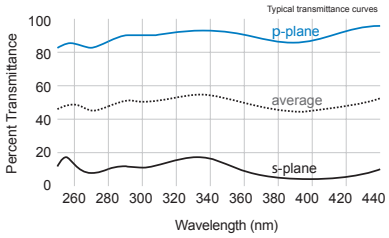

UV Broadband dielectric cube beamsplitters for 250 – 440 nm

Standard Products

Wavelength Range (nm)	A (mm)	CA (mm)	PART NUMBER
Broadband Dielectric Cube Beamsplitters			
250 – 440	12.7	11.4x11.4	BSD-250-440-050
250 – 440	25.4	22.9x22.9	BSD-250-440-100

Cube beamsplitters are recommended for use with collimated or nearly collimated light. Convergent or divergent beams will contribute unwanted spherical aberration to an optical system. Cube beamsplitters consist of matched pairs of right angle prisms cemented together. The hypotenuse of one prism has a partial reflecting coating. A black dot on the ground side of the prism indicated which prism has the partial reflector on the hypotenuse. The incident beam must enter the prism containing the partial reflector first.

- A hybrid metal dielectric coating exhibits moderate absorption with little polarization sensitivity
- These beamsplitters are fairly insensitive to changes in angle of incidence
- Optical adhesive contact
- Performance is relatively flat across a large spectral band

CVI Laser Optics

BROADBAND HYBRID CUBE BEAMSPLITTERS

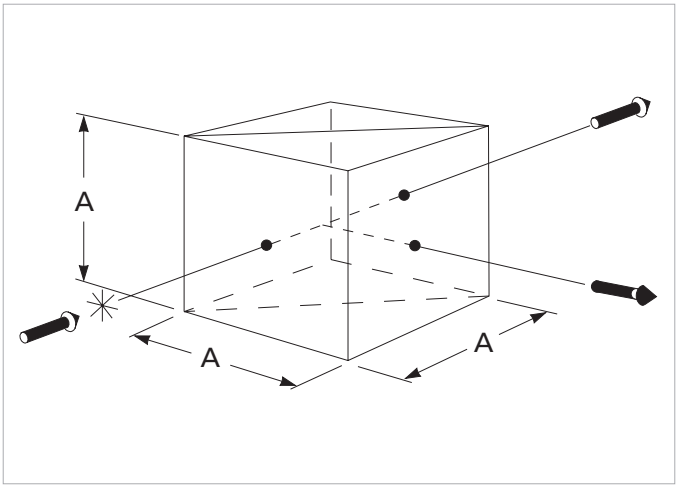

PBSH broadband polarizing cube beamsplitters

Standard Products

Wavelength Range (nm)	A (mm)	CA (mm)	PART NUMBER
Broadband Hybrid Cube Beamsplitters, Ultraviolet			
250 – 400	12.7	11.4x11.4	BSC-250-400-050
250 – 400	25.4	22.9x22.9	BSC-250-400-100
Broadband Hybrid Cube Beamsplitters, Visible			
450 – 700	10.0	9.0x9.0	BSC-450-700-040
450 – 700	12.7	11.4x11.4	BSC-450-700-050
450 – 700	20.0	18.0x18.0	BSC-450-700-080
450 – 700	25.4	22.9x22.9	BSC-450-700-100
Broadband Hybrid Cube Beamsplitters, Near Infrared			
700 – 1000	12.7	11.4x11.4	BSC-700-1000-050
700 – 1000	25.4	22.9x22.9	BSC-700-1000-100

IDEX OPTICS & PHOTONICS MARKETPLACE

Specifications - Ultraviolet

Product Code: BSC

Transmission: 43%±6% for 280 – 400 nm wavelength range, 38%±6% for 250 – 280 nm wavelength range, s- and p-components matched to within 5% for both ranges

Surface Flatness: λ/4 per clear aperture at 632.8 nm

Transmitted Beam Deviation: <10 arc minutes

Absorption: <24%

Coating: <1% reflectance (entrance and exit faces)

Material: UV-grade synthetic fused silica

Edge Dimensions: A±0.3 mm

Surface Quality: 40-20 scratch and dig, beveled edges

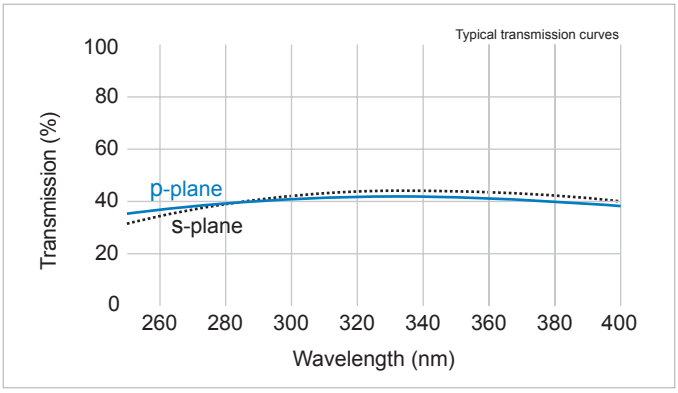

Broadband hybrid cube beamsplitter for 250 – 400 nm

Specifications - Visible

Product Code: BSC

Transmission: 45%±6%

Surface Flatness: λ/2 per clear aperture at 632.8 nm

Transmitted Beam Deviation: <10 arc minutes

Absorption: <10%

Clear Aperture: 90% of central area

Coating: HEBBAR™ antireflection coating (entrance and exit faces)

Material: N-BK7

Edge Dimensions: A±0.3 mm

Surface Quality: 60-40 scratch and dig beveled edges

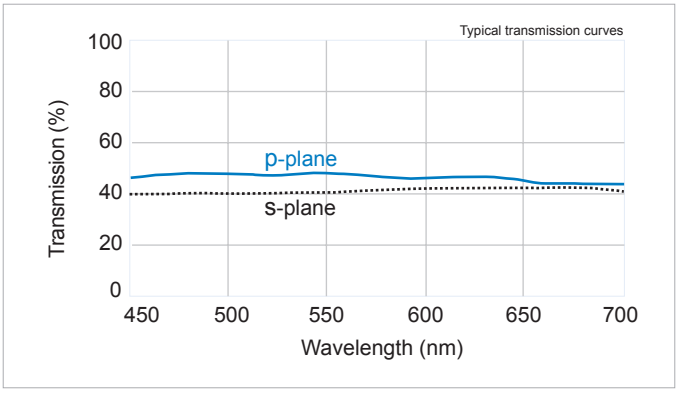

Broadband hybrid cube beamsplitter for 450 – 700 nm

Specifications - Near Infrared

Product Code: BSC

Transmission: 45%±6%

Surface Flatness: λ/2 per clear aperture at 632.8 nm

Transmitted Beam Deviation: <10 arc minutes

Absorption: <10%

Clear Aperture: 90% of central area

Coating: HEBBAR™ antireflection coating (entrance and exit faces)

Material: N-BK7

Edge Dimensions: A±0.3 mm

Surface Quality: 60-40 scratch and dig beveled edges

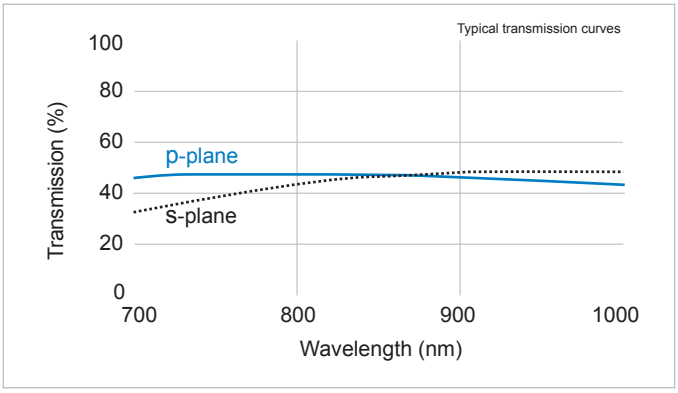

Broadband hybrid cube beamsplitter for 700 – 1000 nm

Continuously variable attenuation of linearly polarized light is achieved with a multiorder rotatable half-waveplate followed by a polarizing beamsplitter cube. The *s*-polarized light is reflected at 90° while *p*-polarized light is transmitted straight through the assembly. The amount of transmitted light depends on the alignment of the waveplate and can be manually adjusted from 1 to 95%.

- ABSO high powered cubes are optically contacted
- Applications include: variable laser sampling, holography, interferometry, light entanglement, and variable ratio beamsplitting
- RoHS compliant
- Convenient ¼-20 tapped thread for mounting

Specifications

Product Code: ABSO

Optical Material: Crystal Quartz and Fused Silica

Housing Material: Black-Anodized Aluminum, 1/4-20 thread

Antireflection Coating: R≤0.25% on all entrance and exit surfaces

Transmission Range: 1%–95%

Transmitted Wavefront Error: λ/4 at 633 nm

Damage Threshold: 5 J/cm², 20 nsec, 20 Hz @ 1064 nm

HIGH ENERGY CONTINUOUSLY VARIABLE BEAMSPLITTERS

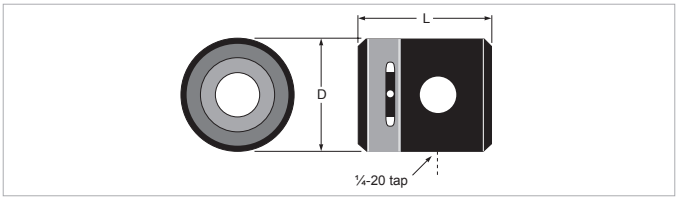

Housing for ABSO continuously variable beamsplitters

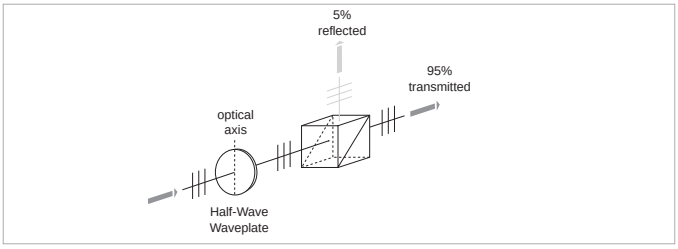

Orientation of waveplate for maximum *p*-polarized transmission

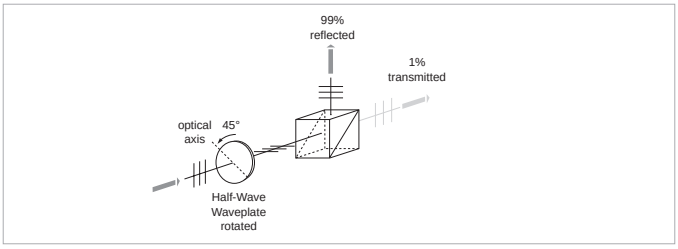

Orientation of waveplate for minimum *p*-polarized transmission

Standard Products

Wavelength (nm)	Clear Aperture (mm)	Housing Diameter Length (D) mm	Housing Length (L) mm	PART NUMBER
High Energy Continuously Variable Beamsplitters				
266	6.35	25.4	33.0	ABSO-6.35-266
355	6.35	25.4	33.0	ABSO-6.35-355
532	6.35	25.4	33.0	ABSO-6.35-532
1064	6.35	25.4	33.0	ABSO-6.35-1064
266	12.7	50.8	48.3	ABSO-12.7-266
355	12.7	50.8	48.3	ABSO-12.7-355
532	12.7	50.8	48.3	ABSO-12.7-532
1064	12.7	50.8	48.3	ABSO-12.7-1064

WAVEPLATES

Waveplates are used in applications where the control, synthesis or analysis of the polarization state of an incident beam of light is required. Our waveplates are constructed of very high, laser quality crystal quartz upon which low loss anti-reflection coatings are applied. Our waveplates are designed to provide a high laser damage threshold and satisfy the most demanding applications in the ultraviolet, visible and near-infrared wavelength regions. Our custom capabilities include large-area waveplates with diameters greater than 2 inches, custom retardations, as well as low-order quartz waveplates for applications where a large field of view or high stability with wavelength and temperature variation is required. Please contact us to learn more.

SELECTION GUIDE 188

DUAL-WAVELENGTH WAVEPLATES 189

MULTIPLE-ORDER QUARTZ WAVEPLATES 190

ZERO-ORDER QUARTZ WAVEPLATES 192

90° POLARIZATION ROTATORS 196

SELECTION GUIDE

Product Type	Effect On Polarization	Typical Bandwidth	Retardation Tolerance	Product Features	Page
DUAL-WAVELENGTH WAVEPLATES, Crystal Quartz	Retards one wavelength λ/2, leaves other unchanged	< 1 nm at 532/1064 nm	λ/100 at both wavelengths	Best for specific wavelenghs & temperatures Available either unmounted or ring-mounted	189
MULTIPLE-ORDER WAVEPLATES, Crystal Quartz	λ/2 or λ/4 retardation	< 1 nm at 532 nm (for λ/100)	λ/200 – λ/500	Best for specific wavelengths & temperatures Wider acceptance angle than zero-order compound waveplates Available either unmounted or ring-mounted	190
ZERO-ORDER COMPOUND WAVEPLATES, Crystal Quartz	λ/2 or λ/4 retardation	30 nm at 800 nm (for λ/100)	λ/200 – λ/500	Increased useful bandwidth Good thermal stability Optically contacted (unmounted or ring-mounted) and air-spaced versions available	192
POLARIZATION ROTATOR, Crystal Quartz	Rotates linear polarization by 90°	Single λ, but rotation varies smoothly with wavelength	±0.5° rotation tolerance	No alignment required; used at normal incidence Only slightly temperature dependent Narrow useful bandwidth	196

IDEX OPTICS & PHOTONICS MARKETPLACE

CVI Laser Optics

DUAL-WAVELENGTH WAVEPLATES

Dual-wavelength waveplates are used in a number of applications to enable selective processing of the beams. One common application is separation of different wavelengths with a polarizing beamsplitter by rotating the polarization of one wavelength by 90° (λ/2 retardation), while leaving the other unchanged. This frequently occurs in nonlinear doubling or tripling laser sources such as Nd:YAG (1064/532/355/266).

The QWPD waveplates use a multiple-order design in which the retardation specifications are met for both wavelengths. This results in a relatively high order waveplate , making them best suited for use only over narrow bandwidth and operating temperature range.

- Precise polarization control for dual wavelength sources
- Readily available for Nd:YAG and harmonics
- Best performance over a narrow temperature and wavelength range
- Optional R10 ring mount prevents breakage and fits easily into lens or mirror mount
- Ask our Applications Engineers about OEM opportunities for other sizes, and wavelength / retardation combinations

Specifications

Product Code: QWPD

Antireflection Coating: per surface, see below table

Transmitted Wavefront: λ/10 p-v @ 633 nm

Damage Threshold: 10 J/cm^2, 20 nsec, 20 Hz; 1 MW/cm^2 cw @ 1064 nm

Clear Aperture: ≥ 85% of diameter for the unmounted waveplates

Optical Material: Crystal Quartz

Surface Quality: 10-5 scratch and dig

Diameter: 12.7 +0/–0.25 mm (unmounted)

25.4 ±0.127 mm (mounted)

Parallelism: ≤ 0.5 arc sec

Retardation Tolerance: λ /100 at both wavelengths at 23° C

Standard Products

Wavelength 1 (nm)	Wavelength 1 Retardation	Wavelength 1 AR Coating	Wavelength 2 (nm)	Wavelength 2 Retardation	Wavelength 2 AR Coating	Ø (mm)	PART NUMBER
Standard Dual-Wavelength Waveplates							
355	λ/2	R < 0.5%	532	λ	R < 0.5%	12.7	QWPD-355-2-532-1-05
355	λ/2	R < 1.3%	1064	λ	R < 0.5%	12.7	QWPD-355-2-1064-1-05
532	λ/2	R < 0.6%	1064	λ	R < 0.3%	12.7	QWPD-532-2-1064-1-05
1064	λ/2	R < 0.3%	532	λ	R < 0.6%	12.7	QWPD-1064-2-532-1-05

If you need the waveplate ring mounted, please add '-R10' at the end of the Part Number. The ring mount diameter is 25.4 mm. Please refer to page 429 for the dimensions of the ring mount for 12.7 mm diameter waveplates.

Specifications

Product Code: QWPM

Antireflection Coating: R ≤ 0.25% per surface

Transmitted Wavefront: λ/10 p-v at 633 nm

Damage Threshold: 10 J/cm², 20 nsec, 20 Hz; 1 MW/cm² cw @ 1064 nm

Clear Aperture: >= 85% of diameter for the unmounted waveplates

Optical Material: Crystal Quartz

Surface Quality: 10-5 scratch and dig

Diameter: Ø +0/-0.25mm (unmounted) Ø±0.127 mm (mounted)

Parallelism: ≤ 0.5 arc sec

Retardation Tolerance: λ/200 to λ/500 at 23°C

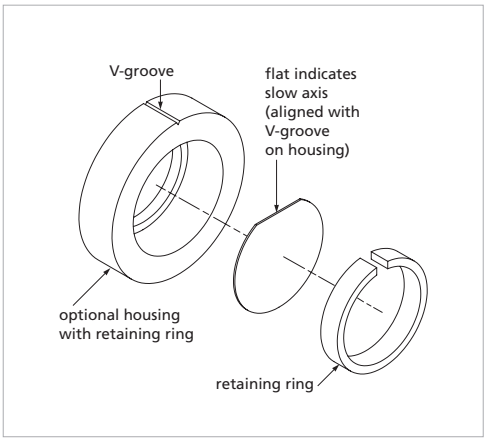

QWPM-series multiple-order waveplates with ring mount

MULTIPLE-ORDER QUARTZ WAVEPLATES

CVI Laser Optics's precision multiple-order QWPM waveplates are high performance and high energy retarders for single wavelength applications. If your application has a working temperature range of greater than ±3°C, we suggest the QWPO zero-order waveplates.

Order standard QWPM waveplates for Nd:YAG and most popular fixed wavelength laser sources from the table below. Use the Semi Custom build your own options on the opposite page for other wavelengths, sizes and mounting options. Waveplates can be ordered mounted or unmounted.

- Polarization control for single-wavelength sources
- High performance specifications, λ/10 TWD
- High damage threshold retarder
- Ask our Applications Engineers about OEM opportunities for other wavelengths, retardations or sizes

Standard Products

Wavelength (nm)	Ø (mm)	Retardation	PART NUMBER
Standard multiple-order quartz waveplates			
266	25.4	λ/2	QWPM-266-10-2
355	12.7	λ/2	QWPM-355-05-2
355	12.7	λ/4	QWPM-355-05-4
355	20.0	λ/2	QWPM-355-08-2
355	25.4	λ/2	QWPM-355-10-2
355	25.4	λ/4	QWPM-355-10-4
527	12.7	λ/2	QWPM-527-05-2
532	12.7	λ/2	QWPM-532-05-2
532	12.7	λ/4	QWPM-532-05-4
532	20.0	λ/2	QWPM-532-08-2
532	25.4	λ/2	QWPM-532-10-2
532	25.4	λ/4	QWPM-532-10-4
633	12.7	λ/2	QWPM-633-05-2
633	25.4	λ/4	QWPM-633-10-4
1030	12.7	λ/2	QWPM-1030-05-2
1053	12.7	λ/2	QWPM-1053-05-2
1053	25.4	λ/2	QWPM-1053-10-2
1053	25.4	λ/4	QWPM-1053-10-4
1064	12.7	λ/2	QWPM-1064-05-2
1064	12.7	λ/4	QWPM-1064-05-4
1064	20.0	λ/2	QWPM-1064-08-2
1064	20.0	λ/4	QWPM-1064-08-4
1064	25.4	λ/2	QWPM-1064-10-2
1064	25.4	λ/4	QWPM-1064-10-4

OPTICS & PHOTONICS MARKETPLACE

Semi Custom

Use the selection menu below to build your own part

YOUR CUSTOM PART NUMBER QWPM — 1064 — 10 — 2 — R15

PRODUCT CODE

QWPM

WAVELENGTH (nm)

select from table to the right

WAVEPLATE DIAMETER CODE

select from table to the right

RETARDATION CODE	Retardation in Waves
2	0.500
4	0.250

RING-MOUNT CODE (optional)

select from table below

QWPM Wavelengths & Sizes Offerings

Wavelength	Waveplate Diameter Code					
	05	08	10	12	15	20
193*	•		•			
244**	•					
248**		•				
266	•		•			
355	•	•	•	•		
400	•		•			
488			•			
515		•				
527	•					
532	•	•	•	•	•	
633	•		•			
670			•			
780	•		•			•
795	•		•			
800			•			
850	•		•			
1030	•	•	•			•
1053	•		•		•	•
1064	•	•	•		•	•
1550	•		•			

* 193 nm waveplates with 0.5″ diameter are available in λ/2 retardation only ** 244 nm and 248 nm waveplates are available in λ/2 retardation only

Waveplate Diameters and Protective Ring Mounts

Waveplate Diameter Code	Waveplate Diameter [mm (in.)]	Optional Ring Mount Code	Ring Mount CA (in.)	Ring Mount OD (±0.005 in.)	Ring Mount Thickness (in.)
05	(0.500)	R10	0.425	1.000	0.250
08	20.0	R10	0.590	1.000	0.250
10	(1.000)	R15	0.850	1.500	0.250
12	30.0	R15	1.000	1.500	0.250
15	(1.500)	R20	1.275	2.000	0.250
20	(2.000)	R30	1.700	3.000	0.250

Specifications

Product Code: QWPO

Antireflection Coating: R ≤ 0.25% per surface

Transmitted Wavefront: λ/10 p-v at 633 nm

Damage Threshold: 10 J/cm^2, 20 nsec, 20 Hz; 1 MW/cm^2 cw @ 1064 nm

Clear Aperture: >= 85% of diameter for the unmounted waveplates

Optical Material: Crystal Quartz

Surface Quality: 10-5 scratch and dig

Diameter: Ø +0/-0.25mm (unmounted), Ø ± 0.127 mm (mounted)

Parallelism: ≤ 0.5 arc sec

Retardation Tolerance: λ/200 to λ/500 at 23°C

Bandwidth: 16 nm at 800 nm for λ/200 - λ/500, 80 nm at 800 nm for λ/50

Mounting/Contacting Options: optically contacted, contacted in a ring mount, or air spaced in a ring mount

CVI Laser Optics

ZERO-ORDER QUARTZ WAVEPLATES

Zero-order waveplates are the preferred solution for applications with a temperature range of greater than ±6°or a wavelength range greater than 2 nm. Their increased bandwidth and excellent thermal stability are due to their compound construction, allowing the temperature effects of the single components to cancel each other out, while the difference in phase retardation between the single components results in true zero order retardation. They provide retardations that are a single submultiple of 2π in phase.

CVI Laser Optics offers QWPO zero-order waveplates in three different options: optically contacted, contacted in a ring mount, or air spaced in a ring mount.

High UV energies can separate optically contacted waveplates. Therefore, CVI Laser Optics recommends QWPO-AS air-spaced zero-order waveplates for wavelengths shorter than 248 nm and repetition rates higher than 1 KHz. Please call to discuss specifications for waveplates designed for wavelengths shorter than 248 nm.

- Wide tunability around design wavelength
- Excellent temperature stability
- High performance specifications, λ/10 TWD
- Damage threshold > 10J/ cm^2, 20 ns pulse at 1064 nm
- Ask our Applications Engineers about OEM opportunities for other wavelengths, retardations or sizes

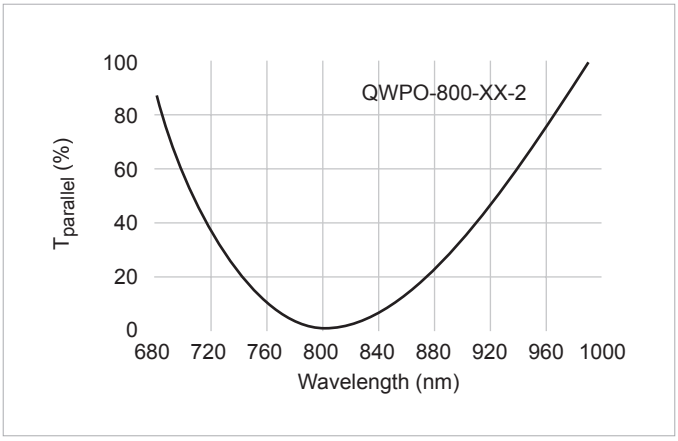

Zero-order crystal quartz half-wave waveplate for 800 nm: the transmission between parallel polarizers is shown using a 0-10% scale. Its extinction ratio is better than 100:1 over a bandwidth of about 95 nm centered at 800 nm.

IDEX OPTICS & PHOTONICS MARKETPLACE

Standard Products

Wavelength (nm)	Ø (mm)	Retardation	PART NUMBER
Standard QWPO Waveplates			
266	12.7	λ/2	QWPO-266-05-2
266	25.4	λ/2	QWPO-266-10-2
355	12.7	λ/2	QWPO-355-05-2
355	25.4	λ/2	QWPO-355-10-2
532	12.7	λ/2	QWPO-532-05-2
532	20.0	λ/2	QWPO-532-08-2
532	25.4	λ/2	QWPO-532-10-2
532	25.4	λ/4	QWPO-532-10-4
780	25.4	λ/2	QWPO-780-10-2
800	12.7	λ/2	QWPO-800-05-2
800	12.7	λ/4	QWPO-800-05-4
800	25.4	λ/2	QWPO-800-10-2
800	25.4	λ/4	QWPO-800-10-4
1030	12.7	λ/2	QWPO-1030-05-2
1030	25.4	λ/2	QWPO-1030-10-2
1030	25.4	λ/4	QWPO-1030-10-4
1053	25.4	λ/2	QWPO-1053-10-2
1064	12.7	λ/2	QWPO-1064-05-2
1064	12.7	λ/4	QWPO-1064-05-4
1064	20.0	λ/2	QWPO-1064-08-2
1064	20.0	λ/4	QWPO-1064-08-4
1064	25.4	λ/2	QWPO-1064-10-2
1064	25.4	λ/4	QWPO-1064-10-4
1550	12.7	λ/2	QWPO-1550-05-2
1550	25.4	λ/2	QWPO-1550-10-2
1550	25.4	λ/4	QWPO-1550-10-4

Semi Custom

Use the selection menu below to build your own part

YOUR CUSTOM PART NUMBER QWPO — 532 — 10 — 4 — R15

PRODUCT CODE	
QWPO	
WAVELENGTH (nm)	
select from options table below	
WAVEPLATE DIAMETER CODE	
select from options table below	
RETARDATION CODE	Retardation in Waves
2	0.500
4	0.250
RING-MOUNT CODE (optional)	
select from table to the right	

QWPO Wavelengths & Sizes Offerings

Wavelength	Waveplate Diameter Code					
	05	08	10	12	15	20
193*			•			
244**	•					
248**		•				
266	•		•			
355	•	•	•	•		
400	•		•			
488			•			
515		•				
532	•	•	•	•	•	
633	•		•			
670			•			
780	•		•			•
800	•	•	•		•	•
850	•		•			
1030	•	•	•			•
1047**	•					
1053	•		•		•	•
1064	•	•	•		•	•
1550	•		•			

* 193 nm and 244 nm zero-order waveplates are provided in air-spaced configuration as standard, in order to maximize laser damage threshold performance. Call an applications engineer to special order contacted configurations for these wavelengths. **244 nm, 248 nm and 1047 nm products are provided with λ/2 retardation only

IDEX OPTICS & PHOTONICS MARKETPLACE

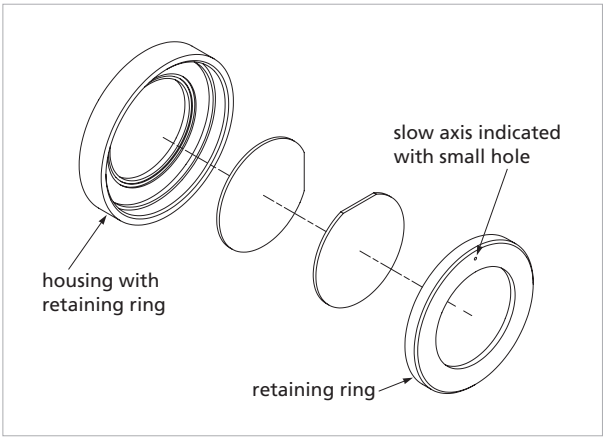

QWPO-series zero-order quartz waveplate air-spaced assembly

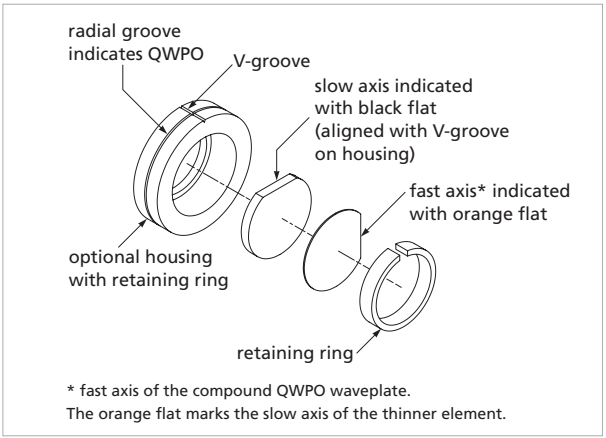

QWPO-series zero-order quartz waveplate with ring mount

Waveplate Diameters and Protective Ring Mounts

Waveplate Diameter Code	Waveplate Diameter [mm (in.)]	Contacted Waveplates Optional Ring Mount Code	Air-spaced Waveplates Ring-Mount Code	Ring Mount CA (in.)	Ring Mount OD (±0.005 in.)	Ring Mount Thickness (in.)
05	(0.500)	R10	AS10	0.425	1.000	0.250
08	20.0	R10	AS10	0.590	1.000	0.250
10	(1.000)	R15	AS15	0.850	1.500	0.250
12	30.0	R15	AS15	1.000	1.500	0.250
15	(1.500)	R20	AS20	1.275	2.000	0.250
20	(2.000)	R30	AS30	1.700	3.000	0.250

Specifications

Product Code: RT

Antireflection Coating: R ≤ 0.25% per surface

Damage Threshold: 10 J/cm², 20 nsec, 20 Hz; 1 MW/cm² cw @ 1064 nm

Clear Aperture: ≥ 85% of diameter

Optical Material: Crystal Quartz

Surface Quality: 10-5 scratch and dig

Diameter: Ø+0/–0.25 mm

Parallelism: ≤ 0.5 arc sec

Rotation Tolerance: ±0.5°

90° POLARIZATION ROTATORS

These rotators have the outstanding feature that their rotation is not a function of their alignment. They are simply placed in the beam at normal incidence, and do not require angular adjustment as with waveplates.

Crystalline quartz rotators based on circular birefringence are very convenient high-damage-threshold devices. They are useful over a narrow bandwidth centered at the design wavelength with only slight temperature dependence..

- Alignment-insensitive single wavelength rotator
- Based on optical activity of crystal quartz
- Ask our Applications Engineers about OEM opportunities for other wavelengths, rotation angles or sizes

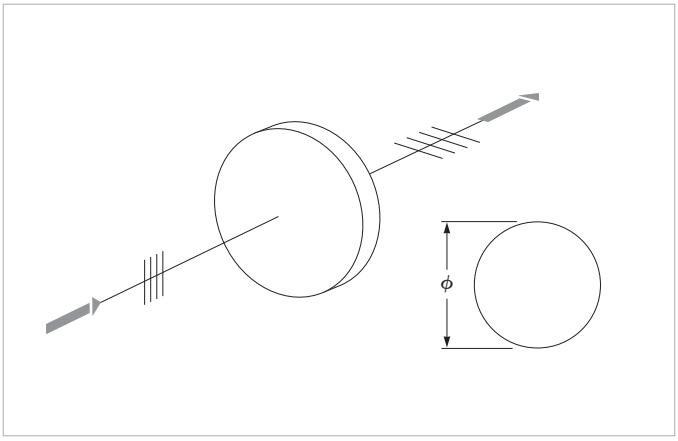

RT polarization rotators

Standard Products

Wavelength (nm)	Ø (mm)	Thickness (mm)	Rotation	Transmitted Wavefront Error (p-v) @ 633 nm	PART NUMBER
90° Polarization Rotators					
1064	25.4	14.3	90°	λ/6	RT-10-1064-90

POLARIZATION COMPONENTS

Polarization components are used to isolate and transmit a single state of polarized light while absorbing, reflecting, and/or deviating light with the orthogonal state of polarization. Applications that are highly sensitive to changes in polarization include interferometry, spectroscopy, laser materials processing, fluorescence imaging, and range finding. We offer a wide range of cube and plate polarizers to perform under different operating conditions including high energy, broad bandwidths, low dispersion and high extinction. Our polarization components are designed to meet the most demanding needs and are available in a variety of coatings and materials to suit your operating wavelength(s). Custom dimensions and coatings are available for OEM applications.

We encourage you to contact our knowledgeable sales staff for more information.

SELECTION GUIDE 198

POLARIZATION COMPONENTS 199

LASER LINE POLARIZING CUBE BEAMSPLITTERS 200

POLARIZING CUBE BEAMSPLITTERS 204

THIN-FILM PLATE POLARIZERS 206

LOW-DISPERSION POLARIZERS 210

SELECTION GUIDE

Diagram	Product Type	Operation Conditions	Extinction Ratio T_p/T_s	Polarization Bandwidth	Transmission Efficiency	Page
Polarizing Cube Beamsplitters						
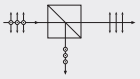	UV LASER-LINE	10 mJ/cm², 20 nsec, 20 Hz; 10 W/cm² cw at 266 nm	100:1	5 nm at 257 nm	90%	200
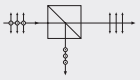	LASER-LINE	1 J/cm², 20 nsec, 20 Hz at 1064 nm; 100 W/cm² cw at 515 nm	1000:1	25 nm at 515 nm	95%	201
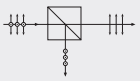	HIGH-ENERGY LASER-LINE	5 J/cm², 20 nsec, 20 Hz; 1 MW/cm² cw at 1064 nm	500:1 at 1064 nm	5–10 nm at 1064 nm	95%	202
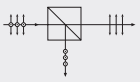	ION BEAM SPUTTERED	10 J/cm², 20 nsec, 20 Hz; 1 MW/cm² cw at 1064 nm	1,000:1 at 1064 nm	5–10 nm at 1064 nm	97%	203
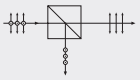	BROADBAND	500 mJ/cm², 20 nsec, 20 Hz; 100 W/cm² cw at 515 nm	500:1	>250 nm at 532 nm	90%	204
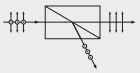	HIGH-ENERGY BROADBAND	5 J/cm², 20 nsec, 20 Hz; 1 MW/cm² cw at 1064 nm	1,000:1 at 1064 nm	140 nm at 532 nm	92% at 800 nm	205
Thin-Film Plate Polarizers						
	THIN-FILM PLATE POLARIZERS 56°	20 J/cm², 20 nsec, 20 Hz; 1 MW/cm² cw at 1064 nm	200:1 at 1064 nm	5 nm at 1064 nm	95% at 1064 nm	206
	ION BEAM SPUTTERED 56°	10 J/cm², 20 nsec, 20 Hz; 1 MW/cm² cw at 1064 nm	1,000:1 at 1064 nm	5 nm at 1064 nm	98% at 1064 nm	208
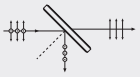	ION BEAM SPUTTERED 45°	10 J/cm², 20 nsec, 20 Hz; 1 MW/cm² cw at 1064 nm	500:1 at 1064 nm	6–8 nm at 1064 nm	97% at 1064 nm	209
	LOW-DISPERSION POLARIZERS	5 J/cm², 50 fsec pulse; 50 kW/cm² cw at 800 nm	15:1 T_p^2/T_s^2 where T_p and T_s are per surface transmission	100 nm at 800 nm	96% at 800 nm	210

IDEX OPTICS & PHOTONICS MARKETPLACE

CVI Laser Optics

POLARIZING CUBE BEAMSPLITTERS

Polarizing cube beamsplitters separate polarization components of an incident beam into two highly polarized output beams separated by a 90° angle. The beam that passes straight through the cube is linearly *p*-polarized with the electric field vector parallel to the plane of incidence. The beam that emerges from the cube at right angles to the incident beam is linearly *s*-polarized with the electric field vector orthogonal to the plane of incidence.

When using a polarizing cube beamsplitter, remember:

- For polychromatic beam-combining applications, the two incoming beams must have properly oriented polarization states. This can be achieved by using a CVI Laser Optics half-wave plate to rotate the polarization state of the beam.
- Only collimated beams of light can be used. A shear plate may be used to make sure that an expanded laser beam is properly collimated before striking the cube.
- Light should be incident on the beamsplitter coating at an angle of 45° ± 2°.

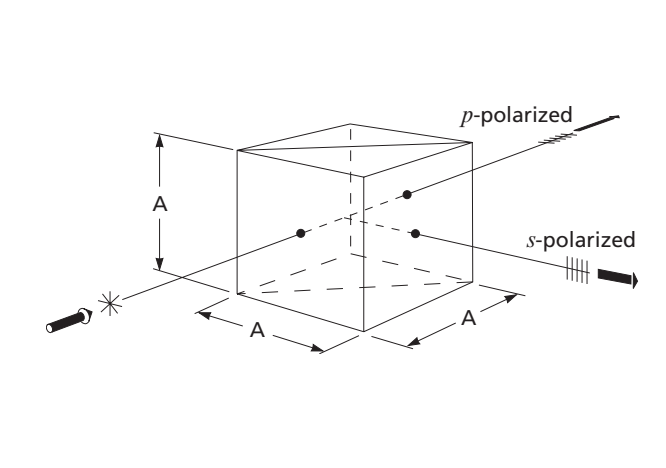

Polarizing cube beamsplitters

UV LASER LINE POLARIZING CUBE BEAMSPLITTERS

These polarizing cube beamsplitters are made from UV grade fused silica to improve UV performance.

To avoid damage when using a laser, be sure to orient the cube so that the beam enters through the prism marked with the dot.

- Fused-silica cube polarizers for doubled argon, tripled Nd:YAG, quadrupled Nd:YAG, and UV excimer lasers
- For use with fluences less than 10 mJ/cm^2
- Optical adhesive contact
- Contact CVI Laser Optics for alternate wavelengths or dimensions for OEM capabilities

Specifications

Product Code: UPBS

Optical Material: UV-grade fused silica

Edge Dimension (A): ±0.25 mm

Surface Quality: 20-10 scratch and dig

Transmitted Wavefront Error: λ/4 at 633 nm

Extinction Ratio: $T_p/T_s > 100:1$

Transmission Efficiency: $T_p > 90.0\%$

Reflection Efficiency: $R_s > 99.0\%$

Clear Aperture: ≥ 85% of central dimension

Field of View: ±2° typical

Damage Threshold:
Pulsed: 10 mJ/cm^2, 20 nsec, 20 Hz @ 266 nm
cw: 10 W/cm^2 @ 266 nm

Antireflection Coating: R ≤ 0.25%, all entrance and exit surface

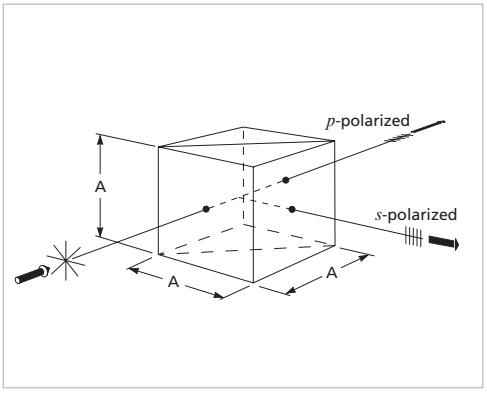

UPBS UV laser line polarizing beamsplitter cubes

Standard Products

Wavelength (nm)	A (mm)	PART NUMBER
UV Laser Line Polarizing Cube Beamsplitters 12.7 mm Cube		
248	12.7	UPBS-248-050
266	12.7	UPBS-266-050
355	12.7	UPBS-355-050
405	12.7	UPBS-405-050
UV Laser Line Polarizing Cube Beamsplitters 25.4 mm Cube		
248	25.4	UPBS-248-100
266	25.4	UPBS-266-100
355	25.4	UPBS-355-100
405	25.4	UPBS-405-100

CVI Laser Optics

LASER LINE POLARIZING CUBE BEAMSPLITTERS

Polarizing beamsplitter cubes are used to split a laser beam into two orthogonally polarized components; *p*-polarization is transmitted straight through while *s*-polarization is reflected at 90°.

To avoid damage when using a high power laser, be sure to orient the cube so that the beam enters through the prism face marked with the dot.

- Projection systems, signal monitoring, color separation and recombination, optical coupling
- Fewer ghost images than plate beamsplitters
- Optical adhesive contact 1000:1 extinction ratio

Specifications

Product Code: PBS

Optical Material: N-BK7 glass

Surface Quality: 20-10 scratch and dig

Antireflection Coating: R ≤ 0.25% per surface

Extinction Ratio: T_p/T_s > 1000:1

Reflection: R_s > 99.9%

Transmission: T_p > 95%

Transmitted Wavefront Error:
A ≤ 1.0 in.: λ/4 @ 633 nm,
A > 1.0 in.: λ/2 @ 633 nm

Field of View: ±3°

Clear Aperture: ≥ 85% of central dimension

Damage Threshold:
Pulsed: 1 J/cm², 20 ns, 20 Hz @ 1064 nm
cw: 100 W/cm² @ 515 nm

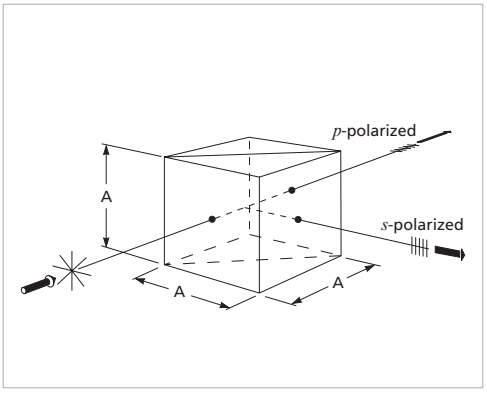

PBS laser line polarizing beamsplitter cubes

Standard Products

Wavelength (nm)	A (mm)	PART NUMBER
Standard Laser Line Polarizing Cube Beamsplitters 12.7 mm Cube		
532	12.7	PBS-532-050
633	12.7	PBS-633-050
780	12.7	PBS-780-050
800	12.7	PBS-800-050
810	12.7	PBS-810-050
830	12.7	PBS-830-050
850	12.7	PBS-850-050
1030	12.7	PBS-1030-050
1047	12.7	PBS-1047-050
1064	12.7	PBS-1064-050
1550	12.7	PBS-1550-050
Standard Laser Line Polarizing Cube Beamsplitters 25.4 mm Cube		
532	25.4	PBS-532-100
633	25.4	PBS-633-100
780	25.4	PBS-780-100
800	25.4	PBS-800-100
1064	25.4	PBS-1064-100

HIGH ENERGY LASER LINE POLARIZING CUBE BEAMSPLITTERS

CVI Laser Optics high-energy polarizing cube coatings are designed for maximum extinction ratio (T_p/T_s). For those applications requiring maximum transmission efficiency, $T_p > 98.0\%$ can be achieved by slightly reducing the extinction ratio.

To avoid damage when using a high power laser, be sure to orient the cube so that the beam enters through the prism face marked with the dot.

- High energy laser line polarizer cube
- Optically contacted
- Reflected and transmitted beams separated by 90°

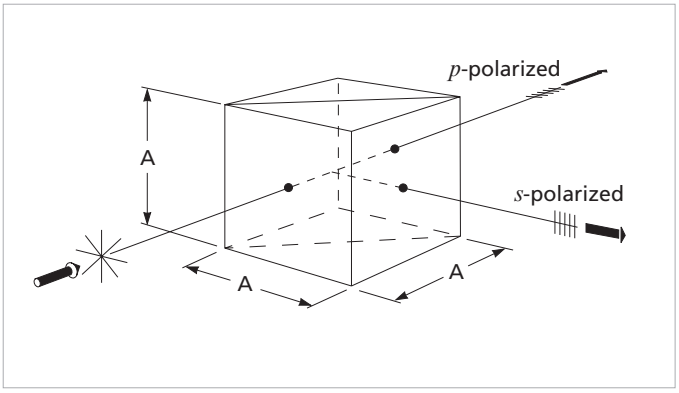

PBSO high energy laser line polarizing beamsplitter cubes

Specifications

Product Code: PBSO

Optical Material: UV-grade fused silica

Edge Dimension: A±0.25 mm

Surface Quality: 20-10 scratch and dig

Transmitted Beam Deviation: < 5 arc min

Transmitted Wavefront Error: λ/4 at 633 nm

Extinction Ratio:
λ=532 nm or 1064 nm: $T_p/T_s > 500:1$
λ< 500 nm: $T_p/T_s > 250:1$

Transmission Efficiency: $T_p > 95\%$

Reflection Efficiency:
λ > 500 nm: $R_s > 99.5\%$,
λ ≤ 500 nm: $R_s > 99.0\%$

Clear Aperture:≥ 85% of central dimension

Damage Threshold:
Pulsed: 5 J/cm², 20 nsec, 20 Hz @ 1064 nm
cw: 1 MW/cm² @ 1064 nm

Antireflection Coating: R ≤ 0.25%, all entrance and exit surfaces

Standard Products

Wavelength (nm)	A (mm)	PART NUMBER
High Energy Laser Line Polarizing Cube Beamsplitters 12.7 mm Cube		
266	12.7	PBSO-266-050
355	12.7	PBSO-355-050
532	12.7	PBSO-532-050
1064	12.7	PBSO-1064-050
High Energy Laser Line Polarizing Cube Beamsplitters 25.4 mm Cube		
266	25.4	PBSO-266-100
355	25.4	PBSO-355-100
532	25.4	PBSO-532-100
1064	25.4	PBSO-1064-100

1-505-298-2550
OPTICS & PHOTONICS MARKETPLACE

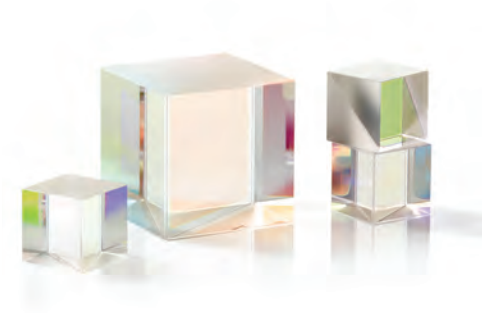

ADVANCED THIN FILMS

ION BEAM SPUTTERED HIGH ENERGY LASER LINE POLARIZING CUBE BEAMSPLITTERS

Ion Beam Sputtered High Energy Laser Line Polarizing Cube Beamsplitters are derived from a unique combination of IBS coatings, ultraprecise fabrication capabilities and our patent-pending, epoxy-free bonding technology Chemically Activated Direct Bonding™ (CADB®) which results in a zero-bondline thickness.

Call us for more information on custom polarizers and beamsplitter cube designs

- High energy laser line polarizer cube
- Chemically Activated Direct Bonding™ (CADB®)
- Reflected and transmitted beams separated by 90°

Specifications

Product Code: PBSI

Optical Material: UV-grade fused silica

Edge Dimension (A): ±0.25 mm

Surface Quality: 10-5 scratch and dig

Transmitted Beam Deviation: < 3 arc min

Transmitted Wavefront Error:
λ/10 transmitted @ 633 nm,
λ/4 reflected @ 633 nm

Clear Aperture: ≥ 85% of central dimension

Antireflection Coating: R ≤ 0.20%, all entrance and exit surfaces

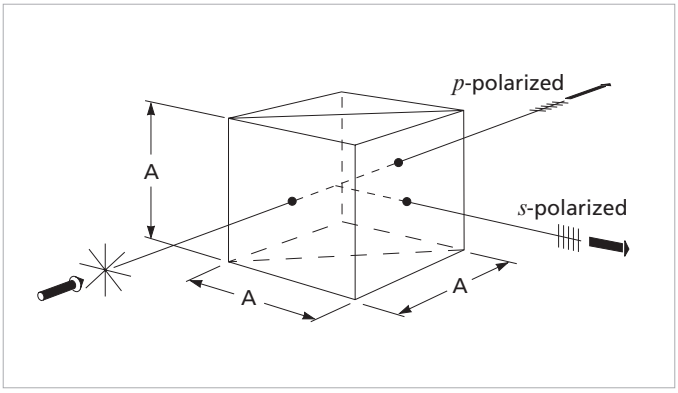

PBSI ion beam sputtered high energy laser line polarizing beamsplitter cubes

Standard Products

Wavelength (nm)	A (mm)	$T_{p\text{-}pol}$	Extinction Ratio T_p/T_s	Damage Threshold	PART NUMBER
Ion Beam Sputtered High Energy Laser Line Polarizing Cube Beamsplitters					
355	12.7	> 95.0%	> 500:1	2 J/cm² @ 355 nm	PBSI-355-050
532	12.7	> 96.0%	> 750:1	4 J/cm² @ 532 nm	PBSI-532-050
1064	12.7	> 97.0%	> 1000:1	10 J/cm² @ 1064 nm	PBSI-1064-050

CVI Laser Optics

VISIBLE AND NEAR-IR BROADBAND POLARIZING CUBE BEAMSPLITTERS

These broadband polarizing beamsplitter cubes are made from N-SF2 glass to improve broadband performance. A multilayer antireflective coating is applied to each face of the beamsplitter to ensure maximum transmission efficiency.

To avoid damage when using a laser, be sure to orient the cube so that the beam enters through the prism marked with the dot.

- Reflected and transmitted beams separated by 90°
- Optical adhesive contact
- Contact CVI Laser Optics for OEM opportunites for other wavelengths or dimensions

Specifications

Product Code: PBSH

Optical Material: N-SF2 glass

Transmission Efficiency (T_p avg): 90%

Edge Dimension (A): ±0.25 mm

Surface Quality: 20-10 scratch and dig

Transmitted Wavefront Error: λ/4 @ 633 nm

Extinction Ratio: T_p/T_s>500:1

Reflection Efficiency: R_s > 99.5% average

Clear Aperture: ≥ 85% of central dimension

Field of View: ±2.5°

Damage Threshold:
Pulsed: 500 mJ/cm^2, 20 nsec, 20 Hz @ 515 nm
cw: 100 W/cm^2 @ 515 nm

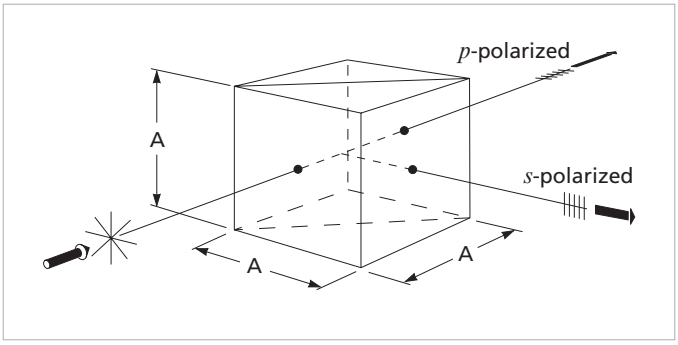

PBSH broadband polarizing cube beamsplitters

Standard Products

Wavelength Range (nm)	A (mm)	R_{avg}	PART NUMBER
Visible and Near-IR Broadband Polarizing Cube Beamsplitters 12.7 mm Cube			
450 – 700	12.7	<0.5%	PBSH-450-700-050
450 – 1300	12.7	<2.5%	PBSH-450-1300-050
450 – 2000	12.7	<3.0%	PBSH-450-2000-050
670 – 980	12.7	<0.5%	PBSH-670-980-050
Visible and Near-IR Broadband Polarizing Cube Beamsplitters 25.4 mm Cube			
450 – 700	25.4	<0.5%	PBSH-450-700-100
450 – 1300	25.4	<2.5%	PBSH-450-1300-100
450 – 2000	25.4	<3.0%	PBSH-450-2000-100
670 – 980	25.4	<0.5%	PBSH-670-980-100

CVI Laser Optics

HIGH ENERGY BROADBAND POLARIZING CUBE BEAMSPLITTERS

An alternative to calcite and Brewster angle polarizers, the PBSK is an optimal solution for high-energy broadband or multiline systems. Unlike cemented cube polarizers, the PBSK is optically contacted, coated with all-dielectric materials and manufactured from fused silica to ensure high transmission and high damage threshold.

To avoid damage when using a high power laser, be sure to orient the cube so that the beam enters through the prism marked with the dot.

- Designed for Pulse Lengths > 15 fs
- λ/4 reflected and transmitted wavefront distortion
- Damage threshold 5 J/cm² at 1064 nm
- Incident and reflected beams separated by 117°
- Contact CVI Laser Optics for other designs between 230 nm and 2100 nm

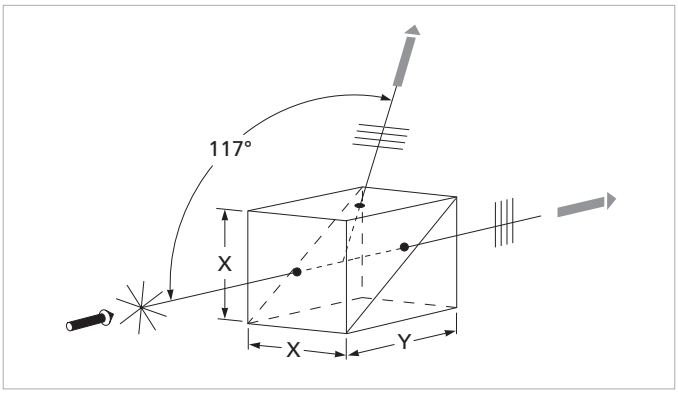

PBSK high-energy broadband polarizing beamsplitter cubes

Specifications

Product Code: PBSK

Optical Material: UV-grade fused silica

Edge Dimension (X,Y): ±0.25 mm

Surface Quality: 20-10 scratch and dig

Transmitted Wavefront Error: λ/4 @ 633 nm

Extinction Ratio: T_p/T_s > 1000:1

Clear Aperture: ≥ 85% of central dimension

Damage Threshold:
Pulsed: 5 J/cm², 20 nsec, 20 Hz @ 1064 nm
cw: 1 MW/cm² @ 1064 nm

Antireflection Coating: R_{avg} ≤ 0.50%, all entrance and exit surfaces

Standard Products

X x Y (mm)	Transmission Efficiency (T_p)	Wavelength Range (nm)	PART NUMBER
High Energy Broadband Polarizing Cube Beamsplitters			
12.7x17.5	92%	700 – 900	PBSK-700-900-050
15.4x35.3	92%	700 – 900	PBSK-700-900-100

THIN-FILM PLATE POLARIZERS, 56°

TFP thin-film plate polarizers are the best choice when maximum laser damage resistance is necessary.Typically, thin film polarizers are used for fluences greater than 500 mJ/cm^2, where calcite air-spaced polarizers exhibit long-term tracking and cemented polarizers cannot be used at all. Applications for the TFP include usage as an intracavity Q-switch hold-off polarizer, and, in conjunction with a half-wave plate, as an extracavity attenuator for an Nd:YAG laser fundamental and its harmonics. To maximize transmission, users must make a provision in their mechanical setup for the necessary angular tuning. Note that the losses at the uncoated second surface are insignificant at 83° from Brewster's angle.

- High damage threshold Brewster-angle polarizer, >20 J/cm^2
- Angle tuning suggested to achieve maximum transmission
- Contact CVI Laser Optics for alternate wavelengths, dimensions and OEM capabilities

Specifications

Product Code: TFP

Optical Material: UV-grade fused silica

Diameter: Ø +0/–0.25 mm

Thickness: t ±0.25 mm

Surface Figure: λ/10 at 633 nm before coating

Surface Quality: 10-5 scratch and dig

Wedge: ≤ 5 arc min

Chamfer: 0.35 mm @ 45° (typical)

Transmitted Wavefront Error: λ/8 at 633 nm

Transmission Efficiency:
λ ≥ 527 nm: 95%,
λ = 355 nm: 90%,
λ = 248 nm or 266 nm: 85%

Tp/Ts,:
λ ≥ 527 nm: 200:1
λ = 248 nm, 266 nm and 355 nm: 100:1

Clear Aperture: ≥ 85% of central diameter

Damage Threshold:
Pulsed: 20 J/cm^2, 20 nsec, 20 Hz @ 1064 nm
cw: 1 MW/cm^2 @ 1064 nm

Angle of Incidence: 56°±3° *

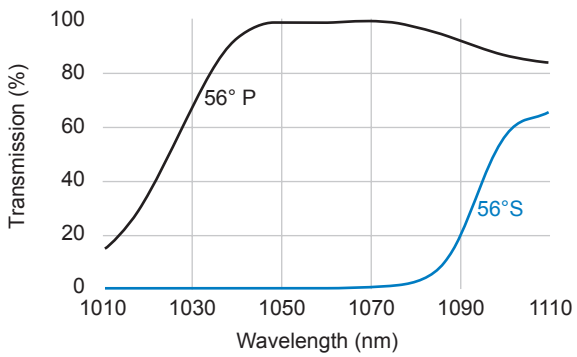

Transmission vs wavelength of TFP series 1064-nm thin film polarizer

Standard Products

Center Wavelength (nm)	Dimensions (mm)	t (mm)	Optical Material	PART NUMBER
Thin-Film Plate Polarizers 56°				
355	∅ 25.4	6.4	Fused Silica	TFP-355-PW-1025-UV
355	∅ 50.8	6.4	Fused Silica	TFP-355-PW-2025-UV
355	28.6x14.3	3.2	Fused Silica	TFP-355-RW-28.6-14.3-3.2-UV
527	28.6x14.3	3.2	Fused Silica	TFP-527-RW-28.6-14.3-3.2-UV
532	∅ 25.4	6.4	Fused Silica	TFP-532-PW-1025-UV
532	∅ 50.8	6.4	Fused Silica	TFP-532-PW-2025-UV
532	28.6x14.3	3.2	Fused Silica	TFP-532-RW-28.6-14.3-3.2-UV
1053	28.6x14.3	3.2	Fused Silica	TFP-1053-RW-28.6-14.3-3.2-UV
1064	∅ 25.4	6.4	Fused Silica	TFP-1064-PW-1025-UV
1064	∅ 50.8	6.4	Fused Silica	TFP-1064-PW-2025-UV
1064	28.6x14.3	3.2	Fused Silica	TFP-1064-RW-28.6-14.3-3.2-UV

ADVANCED THIN FILMS

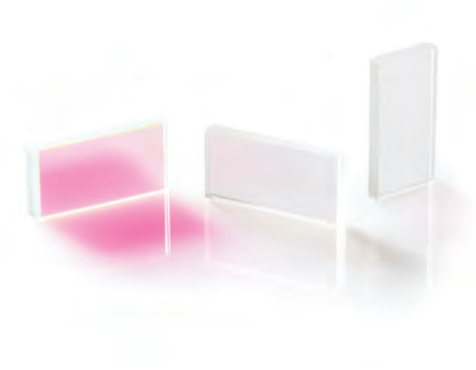

ION BEAM SPUTTERED THIN-FILM PLATE POLARIZERS, 56°

These thin-film plate polarizers utilize our advanced ion-beam sputtered (IBS) coating technology to achieve high-power performance and guaranteed transmission at a specific angle of incidence, with no angle tuning required. By combining durable dielectric coatings with fused silica substrates, we produce robust optical components that are stable, easy to align and exhibit high laser damage thresholds in both reflection and transmission.

- Wide acceptance angle and no angle tuning required
- Extinction ratios greater than 1000:1 ; no AR coating necessary
- RoHs Compliant
- For other wavelengths throughout the visible and near-IR (including Nd:YAG and fiber-laser wavelengths), substrate sizes or angles of incidence, please contact us.

Specifications

Product Code: TFPI

Optical Material: UV-grade fused silica

Diameter: Ø +0/–0.25 mm

Thickness: t ±0.25 mm

Surface Figure: λ/10 at 633 nm before coating

Surface Quality: 10-5 scratch and dig

Wedge: ≤ 5 arc min

Chamfer: 0.35 mm @ 45° (typical)

Transmitted Wavefront Error: λ/10 at 633 nm

Clear Aperture: ≥ 85% of central diameter

Angle of Incidence: 56°

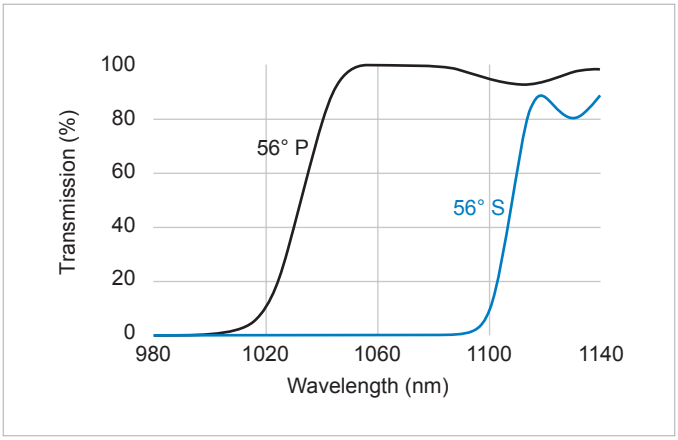

Transmission vs wavelength of TFPI series 1064 nm thin film polarizer

Standard Products

Center Wavelength (nm)	Dimensions (mm)	t (mm)	p Transmission	s Transmission	Extinction Ratio T_p/T_s	Damage Threshold	PART NUMBER
Ion Beam Sputtered Thin-Film Plate Polarizers, 56°							
355	Ø 25.4	6.35	> 95%	< 0.20%	> 200:1	> 2 J/cm², 10ns 20Hz @ 355nm	TFPI-355-PW-1025-UV
532	Ø 25.4	6.35	> 98.0%	< 0.20%	> 1000:1	> 4 J/cm², 10ns 20Hz @ 532nm	TFPI-532-PW-1025-UV
1064	Ø 25.4	6.35	> 98.0%	< 0.10%	> 5000:1	> 10 J/cm², 20ns 20Hz @ 1064nm	TFPI-1064-PW-1025-UV

IDEX OPTICS & PHOTONICS MARKETPLACE

ADVANCED THIN FILMS

ION BEAM SPUTTERED THIN-FILM PLATE POLARIZERS, 45°

TFPN thin-film plate polarizers are an ideal choice when both high laser damage threshold and a 90° reflection angle are necessary. Unlike Brewster angle polarizers which work at an angle of incidence of 56°, the TFPN plate polarizer works at 45°. Consequently, the reflected and transmitted beams are separated by 90° and orthogonally polarized, just like a cube polarizer.

- High-energy laser line polarizer
- Reflected and transmitted beams separated by 90°
- No angle tuning required
- RoHS compliant
- Contact CVI Laser Optics for other wavelengths and sizes

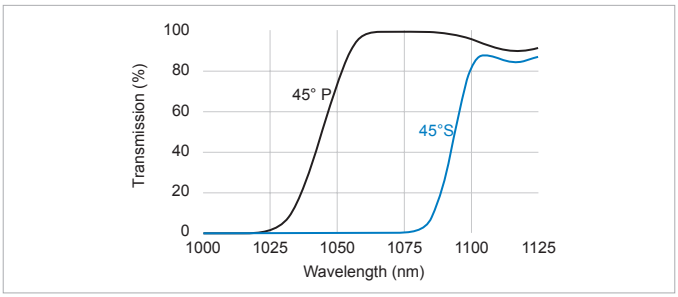

Transmission versus wavelength of TFPN series 1064-nm thin film plate polarizers

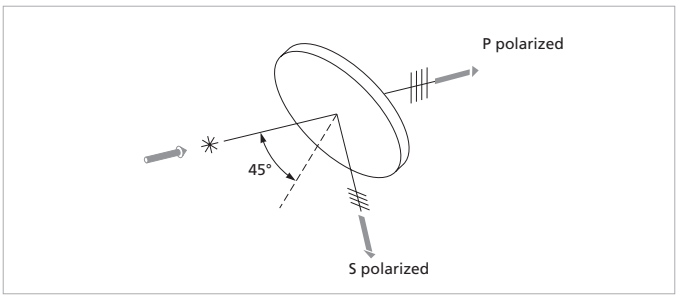

TFPN 45° thin film plate polarizers

Specifications

Product Code: TFPN

Optical Material: UV-grade fused silica

Diameter: Ø +0/–0.25 mm

Thickness: t ±0.25 mm

Surface Quality: 10-5 scratch and dig

Wedge: ≤ 5 arc min

Chamfer: 0.35 mm @ 45° (typical)

Transmitted Wavefront Error: λ/8 at 633 nm

Transmission Efficiency:
λ=1064 nm: Tp >97%,
λ=532 nm: Tp >96%

Tp/Ts: 500:1

Clear Aperture: ≥ 85% of central diameter

Damage Threshold:
Pulsed: 10 J/cm^2, 20 nsec, 20 Hz @ 1064 nm
cw: 1 MW/cm^2 @ 1064 nm

Angle of Incidence: 45°

Standard Products

Ø (mm)	t (mm)	Wavelength (nm)	PART NUMBER
Ion Beam Sputtered Thin-Film Plate Polarizers, 45°			
25.4	6.4	532	TFPN-532-PW-1025-UV
25.4	6.4	1064	TFPN-1064-PW-1025-UV

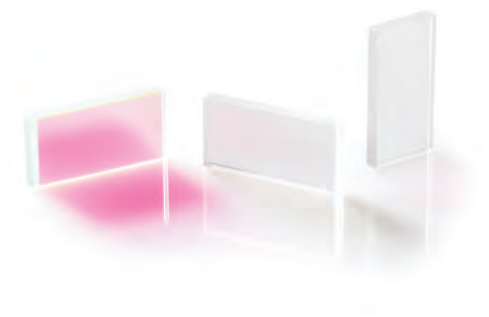

CVI Laser Optics has developed the TFPK low-dispersion polarizing beamsplitters to satisfy requirements for very-high-power, short-pulse lasers. These optics are ideal for intracavity use in femtosecond regenerative amplifiers. The main emphasis is on linear phase characteristics.

- Designed for Pulse Lengths > 50 fs
- Ideal for intracavity use in femtosecond regenerative amplifiers
- Low group-velocity dispersion for ultrashort femtosecond applications
- Custom wavelengths from 250–1550 nm, call for details

Specifications

Product Code: TFPK

Optical Material: UV-grade fused silica

Extinction Ratio: T_p^2/T_s^2 > 15:1 where T_P and T_S are per-surface transmissions

Transmission Efficiency: T_p > 98% for each surface. Slight tilting is required to find angle of minimum loss.

Reflection Efficiency: R_s > 75% each surface. *s*-polarization reflectivities of 85% and 95% are available at some sacrifice of *p*-polarization transmission. Working angle of incidence will increase.

Bandwidth: See curve for 800 nm performance.

Wavelength: 800 nm

Angle of Incidence: 72°±2°

LOW-DISPERSION POLARIZERS

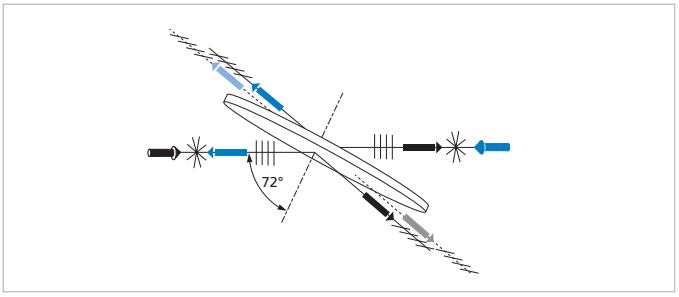

TFPK low-dispersion polarizers

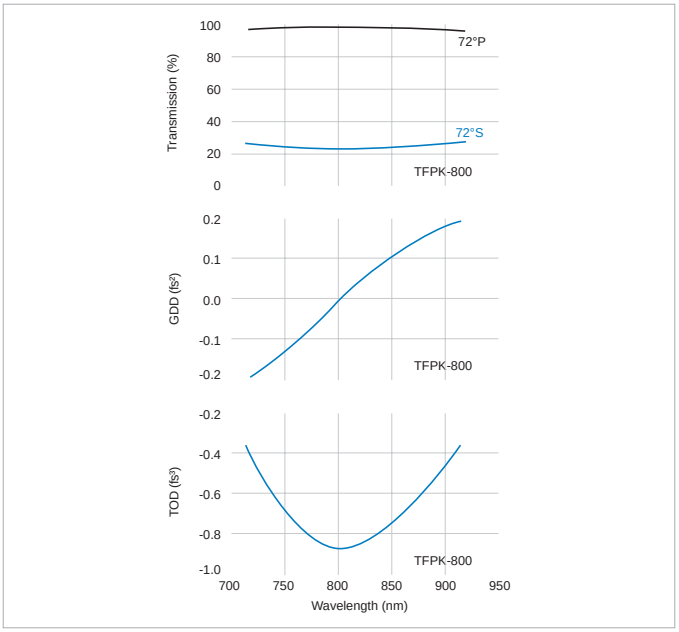

Properties for one coated side of a TFPK polarizing beamsplitter optimized for 800 nm. Both sides are coated for these properties.

Standard Products

Wavelength (nm)	Shape	Dimensions (mm)	t (mm)	PART NUMBER
Low-Dispersion Polarizers				
800	Rectangular	28.6 x 14.3	3.18	TFPK-800-RW-28.6-14.3-3.18-UV
800	Round	∅25.4	3.175	TFPK-800-PW1-1012-UV
800	Round	∅ 50.8	6.35	TFPK-800-PW1-2025-UV

ULTRAFAST COMPONENTS

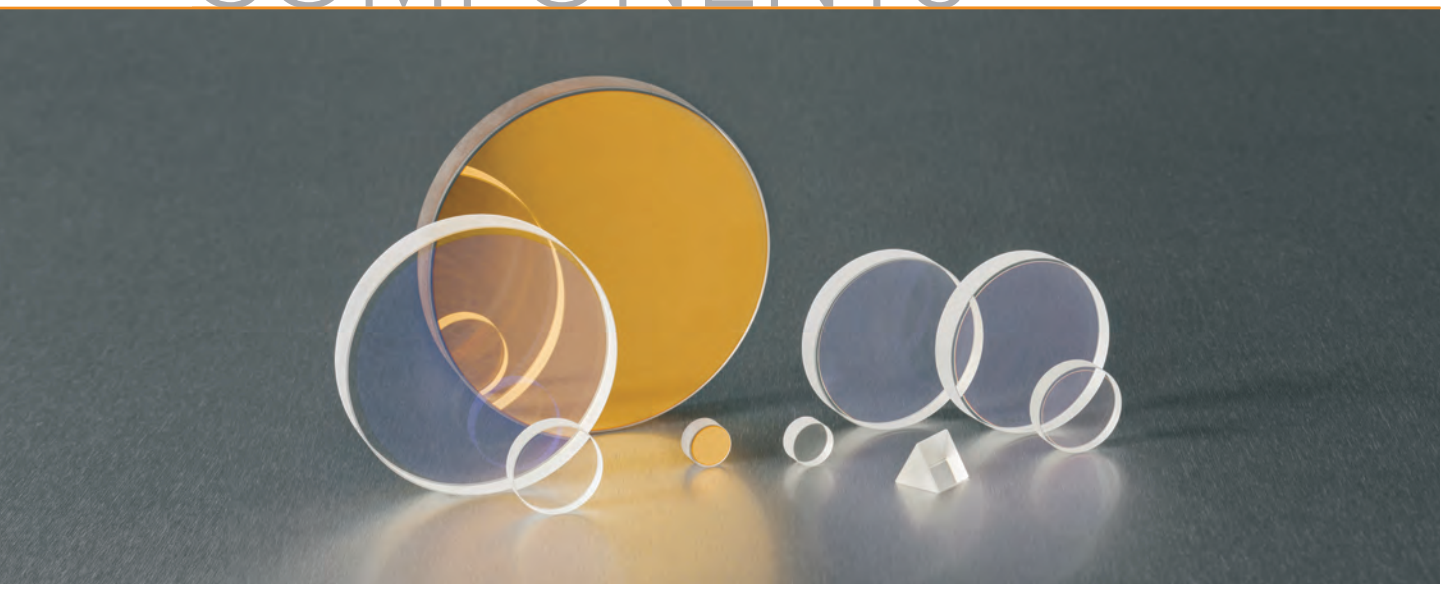

CVI Laser Optics offers the PulseLine™ family of ultrafast optical components specifically designed for femtosecond lasers and associated applications. By leveraging our global expertise in thin-film coatings, manufacturing, and applications across Advanced Thin Films, CVI Laser Optics, and Semrock, we offer a broad range of high-performance laser optics designed to manage the effects of dispersion for use with femtosecond lasers and laser systems. These products are ideal for use in laboratory setups, commercial instruments, and high-energy laser facilities developing next-generation energy sources.

PulseLine™ ultrafast laser optics utilize e-beam or ion-beam sputtered coating technology for pulses >10 fsec. Our femtosecond laser mirrors offer high reflectivity, low dispersion, and high laser induced damage threshold (LIDT). We also offer low dispersion optics that offer precise control of the polarization state of your laser beam. PulseLine™ optics are ideal for use with broadly tunable Ti:Sapphire, Ytterbium and Erbium fiber lasers, and femtosecond light sources operating in the UV and visible. Contact CVI Laser Optics Inside Sales to discuss your needs.

Please see Pg. IV for the Semi Custom Selection Guide.

SELECTION GUIDE 212

BROADBAND TI:SAPPHIRE MIRRORS 213

HIGH ENERGY TI:SAPPHIRE MIRRORS 214

TUNABLE LASER LINE MIRRORS 216

TUNABLE BROADBAND MIRRORS 218

HIGH POWER ND:YAG LASER MIRRORS 220

METAL COATED MIRRORS 222

FEMTOSECOND BEAMSPLITTERS 224

LOW-DISPERSION POLARIZERS 226

HIGH-ENERGY BROADBAND POLARIZING CUBE BEAMSPLITTERS 227

ISOSCELES BREWSTER PRISMS 228

SELECTION GUIDE

Product Type	Operating Conditions	Wavelengths	Angle of Incidence	Performance	Page
BROADBAND TI:SAPPHIRE MIRRORS	0.35 J/cm^2, 50 psec, 50 Hz @ 800 nm	450 – 2100 nm	0° or 45°	R > 99.0% for 720 – 900 nm Broadband design with ultralow GDD	213
HIGH ENERGY TI:SAPPHIRE MIRRORS	0.46 J/cm2, 50 fsec, 50 Hz @ 800 nm	740 – 860 nm	0° or 45°	R > 99.0% for 740 – 860 nm Broadband design with ultralow GDD	214
TUNABLE LASER LINE MIRRORS	0.55 J/cm2, 50 fsec, 50 Hz @ 800 nm	From 190 nm to 2100 nm	0° or 45°	R > 99.5% at 355 nm ≤ λ ≤ 2100 nm; High Power design with low GDD	216
TUNABLE BROADBAND MIRRORS	0.28 J/cm2, 50 fsec, 50 Hz @ 800 nm	450 – 2100 nm	0° or 45°	R > 99.5% at 450 nm ≤ λ ≤ 2100 nm; Low Power design with ultralow GDD	218
ND:YAG 532 NM LASER MIRRORS	5 J/cm2, 10 nsec, 20 Hz @ 532 nm 1 MW/cm2 @ 532 nm	532 nm	0° or 45°	R > 99.5% at 0° incidence	220
ND:YAG 1064 NM LASER MIRRORS	20 J/cm^2, 20 nsec, 20 Hz; 1 MW/cm^2 cw @ 1064 nm	1064 nm	0° or 45°	R > 99.5% at 0° incidence	221
PROTECTED SILVER METAL COATED MIRRORS	~ 0.21 J/cm2, 50 fsec, 50 Hz @ 800 nm	400 – 20,000 nm	0° – 45°	R_{avg} ≥ 95% (400 nm to 20 µm)	222
PROTECTED GOLD METAL COATED MIRRORS	~ 2 J/cm^2, 10 nsec, 10Hz @ 1064 n	650 – 20,000 nm	0° – 45°	R_{avg} ≥ 95.5% (650 nm to 20 µm)	223
FEMTOSECOND BEAMSPLITTERS	~ 0.5 to 1 J/cm^2, 20 nsec, 20 Hz @ 1064 nm	400 nm, 800 nm Custom	45°	Broadband all-dielectric R/T ratio 50:50	224
LOW-DISPERSION POLARIZERS	5 J/cm^2, 50 fsec pulse; 50 kW/cm^2 cw @ 800 nm	400 nm, 800 nm, Custom	72° ± 2°	T_p > 96% at 800 nm Extinction Ratio T_p/T_s > 15:1 Polarization bandwidth 100 nm at 800 nm	226
HIGH ENERGY BROADBAND POLARIZING CUBE BEAMSPLITTERS	5 J/cm^2, 20 nsec, 20 Hz; 1 MW/cm^2 cw @ 1064 nm	248 – 308 nm, 460 – 600 nm, 700 – 900 nm, 950 –1230 nm	0° - Incident and reflected beams separated by 117°	T_p > 92% at 800 nm Extinction Ratio T_p/T_s > 103:1 Polarization bandwidth 140 nm at 532 nm	227
ISOCELES BREWSTER PRISMS	15 J/cm^2, 20 nsec, 20 Hz @ 1064 nm	488 nm, 800 nm	Brewster angle	GDD correction Extremely small loss for p-polarized beam	228

IDEX OPTICS & PHOTONICS MARKETPLACE

BROADBAND TI:SAPPHIRE MIRRORS

The TLMW mirrors was specially designed to achieve a wider bandwidth (720 - 900 nm) than our premier TLMB Ti:Sapphire mirror while maintaining high reflectivity, low dispersion and high damage threshold. These mirrors are designed for 800 nm Ti:Sapphire laser applications with pulse lengths as low as 15 femtoseconds.

- Designed for Pulse Lengths > 15 fs
- Ultrahard coatings with LDT 1 J/cm^2, 180 fsec @ 800 nm
- High reflectivity: 720 - 900 nm for 0° or 45° UNP
- Contact CVI Laser Optics for a range of custom options

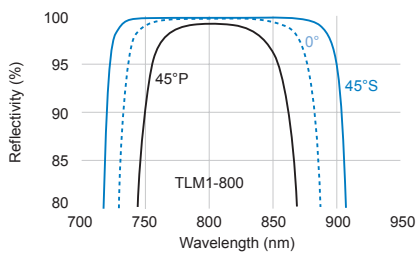

Reflectivity vs wavelength of TLMW-800 broadband laser mirror showing 0° and 45° angle of incidence designs

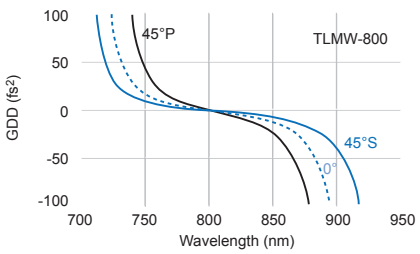

Group delay dispersion vs wavelength of TLM1-800 narrowband laser mirror showing 0° and 45° angle of incidence designs

Specifications

Product Code: TLMW

Substrate Material: N-BK7 glass

S1 Surface Figure: λ/10 @ 633 nm before coating

S1 Surface Quality: 10-5 scratch and dig

S2 Surface Quality: Commercial polish

Diameter Tolerance: +0/–0.25 mm

Thickness Tolerance: ±0.25 mm

Wedge: ≤5 arc min

Chamfer: 0.35 mm at 45° typical

Concentricity: ≤0.05 mm

Radius Tolerance: ±0.5%

Coating Technology: Electron beam multilayer dielectric

Adhesion and Durability: Per MIL-C-675C. Insoluble in lab solvents.

Clear Aperture: ≥85% of central diameter

Center Wavelength: 800 nm

Reflectivity: R > 99.0% from 720 - 900 nm

Damage Threshold
Pulsed: 0.35 J/cm2, 50 fsec, 50 Hz @ 800 nm

Bandwidth Tolerance: +0/–10% typical

Standard Products

Ø (mm)	t (mm)	Incidence Angle	PART NUMBER
Broadband Ti:Sapphire Mirrors			
25.4	6.4	0°	TLMW-800-0-1025
25.4	6.4	45°	TLMW-800-45-1025

CVI Laser Optics

HIGH ENERGY TI:SAPPHIRE MIRRORS

Traditional high damage mirrors are limited in bandwidth. Broader reflectivity bands can be achieved by using different coating materials, but that reduces the damage threshold.

These mirrors are available upon special request for all Ti:Sapphire laser-related center wavelengths.

- Designed for Pulse Lengths > 30 fs
- Ultrahard coatings with high laser-damage threshold of 0.46 J/cm^2, 50 fsec, 50 Hz
- Broadband design with ultralow group velocity dispersion (GVD)
- High reflectivity: 740 – 860 nm for 0° or 45° Unpolarized
- Contact CVI Laser Optics for a range of custom options such as wavelength, curved substrates or very large large mirror options up to 0.5 meters (18" diameter)

Specifications

Product Code: TLMB

Substrate Material: N-BK7 glass

S1 Surface Figure: λ/10 @ 633 nm before coating

S1 Surface Quality: 10-5 scratch and dig

S2 Surface Quality: Commercial polish

Diameter Tolerance: Ø +0/–0.25 mm

Thickness Tolerance: t ±0.25 mm

Wedge: ≤5 arc min

Adhesion and Durability: Per MIL-C-675C. Insoluble in lab solvents.

Clear Aperture: ≥85% of central diameter

Angle of Incidence: 0° or 45° UNP

Center Wavelength: 800 nm

Reflectivity: R > 99.0% from 740 – 860 nm for 0° or 45° UNP

Damage Threshold:
Pulsed: 0.46 J/cm2, 50 fsec, 50 Hz @ 800 nm

Coated Surface Figure: λ/10 @ 633 nm

Standard Products

Incidence Angle	Ø (mm)	t (mm)	PART NUMBER
Ti:Sapphire Mirrors			
0°	25.4	6.4	TLMB-800-0-1025
45°	25.4	6.4	TLMB-800-45-1025
0°	50.8	9.5	TLMB-800-0-2037
45°	50.8	9.5	TLMB-800-45-2037
45°	76.2	12.7	TLMB-800-45-3050
45°	101.6	12.7	TLMB-800-45-4050

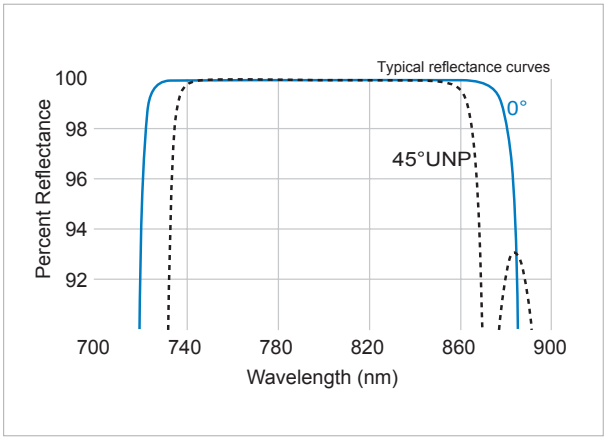

TLMB-800 Ti:Sapphire broadband mirror showing 0[deg] and 45[deg] angle of incidence designs

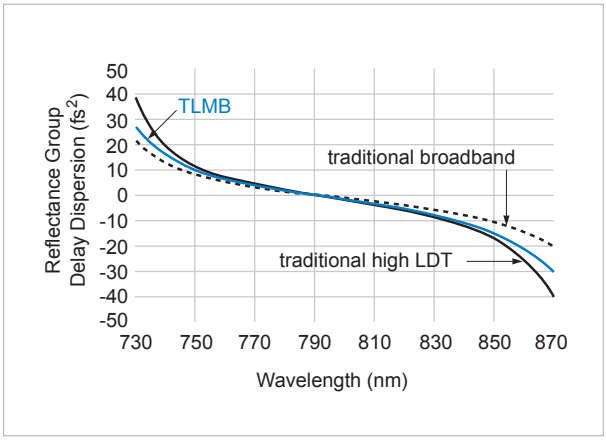

A comparison of group delay dispersion vs wavelength of traditional broadband, traditional high laser damage threshold, and the CVI Laser Optics TLMB ultrafast mirror

Semi Custom Use the selection menu below to build your own part

YOUR CUSTOM PART NUMBER TLMB — 800 — 45 — 1025

PRODUCT CODE

TLMB

WAVELENGTH (nm)

800

ANGLE OF INCIDENCE in Degrees

0	Normal incidence
45	45 degrees

SIZE CODE	Diameter (mm)	Thickness (mm)
2506M	25.0	6.0
1025	25.4	6.35
5010M	50.0	10.0
2037	50.8	9.53
3050	76.2	12.7
4050	101.6	12.7

CVI Laser Optics

TUNABLE LASER LINE MIRRORS

For applications at user-specified wavelengths, these single stack, high-damage-threshold mirrors have become the industry standard. Damage threshold can be greater than 20 J/cm^2 depending on such factors as wavelength, pulse width, repetition rate, and exact beam profile.

- High energy dielectric coating
- Other wavelengths and substrates available upon request
- Refer to website for typical bandwidths
- Designed for Pulse Lengths > 130 fs

Specifications

Product Code: TLM1

Coating Technology: Electron beam multilayer dielectric

Adhesion and Durability: Per MIL-C-675C. Insoluble in lab solvents.

Clear Aperture: ≥85% of central diameter

Angle of Incidence: 0° or 45° options

Reflectivity:
Angle of Incidence 0°:
R≥99.0%
Angle of Incidence 45°:
R≥98.5% for p-polarization
R≥99.0% for unpolarized
R≥99.5% for s-polarization

Damage Threshold:
Pulsed:
3.0 J/cm^2, 7 nsec, 20 Hz @ 266 nm
5.0 J/cm^2, 10 nsec, 20 Hz @ 532 nm
0.55 J/cm^2, 50 fsec, 50 Hz @ 800 nm
20 J/cm^2, 20 nsec, 20 Hz @ 1064 nm
Continuous Wave: 10 MW/cm2 @1064 nm

Bandwidth Tolerance: +0/–10% typical

Center Wavelength Tolerance: ±3%

Substrate Material:
λ<450 nm: UV-grade fused silica
λ≥450 nm: N-BK7 glass

S1 Surface Figure: λ/10 @ 633 nm before coating

S1 Surface Quality: 10-5 scratch and dig

S2 Surface Quality: Commercial polish

Concentricity: ≤0.05 mm

Radius Tolerance: ±0.5%

Standard Products

Wavelength (nm)	Incidence Angle	Ø (mm)	t (mm)	Radius of Curvature (m)	PART NUMBER
Standard TLM1 Laser Line Mirrors					
400	0	25.4	6.35	—	TLM1-400-0-1025
400	45	25.4	6.35	—	TLM1-400-45-1025
780	45	25.4	6.35	—	TLM1-780-45-1025
800	0	12.7	6.35	—	TLM1-800-0-0525
800	45	12.7	6.35	—	TLM1-800-45-0525
800	0	25.4	6.35	—	TLM1-800-0-1025
800	45	25.4	6.35	—	TLM1-800-45-1025
800	0	25.4	6.35	0.50CC	TLM1-800-0-1025-0.50CC
800	0	25.4	6.35	1.00CC	TLM1-800-0-1025-1.00CC
800	0	25.4	6.35	0.30CX	TLM1-800-0-1025-0.30CX
800	0	25.4	6.35	0.50CX	TLM1-800-0-1025-0.50CX
800	0	25.4	6.35	1.00CX	TLM1-800-0-1025-1.00CX
800	0	50.8	9.53	—	TLM1-800-0-2037
800	45	50.8	9.53	—	TLM1-800-45-2037
800	45	76.2	12.7	—	TLM1-800-45-3050
800	45	101.6	12.7	—	TLM1-800-45-4050
980	45	25.4	6.35	—	TLM1-980-45-1025
1030	45	25.4	6.35	—	TLM1-1030-45-1025
1550	45	25.4	6.35	—	TLM1-1550-45-1025

IDEX OPTICS & PHOTONICS MARKETPLACE

Semi Custom Use the selection menu below to build your own part

YOUR CUSTOM PART NUMBER TLM1 — 800 — 0 — 1025 — 1.00CC

PRODUCT CODE

TLM1

CENTER WAVELENGTH (nm)

200	405	600	790	980
280	450	750	800	1030
400	488-515	780	850	1550

ANGLE OF INCIDENCE in Degrees

0
45

SIZE CODE	Diameter (nm)	Thickness (nm)	Standard Options
0525	12.7	6.35	Flat or Radius
0725	19.1	6.35	Flat Only
2506M	25.0	6.0	Flat Only
1025	25.4	6.35	Flat or Radius
5010M	50.0	10.0	Flat Only
2037	50.8	9.53	Flat or Radius
3050	76.2	12.7	Flat Only
4050	101.6	12.7	Flat Only

RADIUS OF CURVATURE (m)

SIZE CODE	Diameter (mm)	RADII OPTIONS (m), CC = concave					RADII OPTIONS(m), CX = convex	
0525	12.7	0.075CC	0.15CC	0.25.CC	1.00CC		1.00CX	
		0.10CC	0.20CC	0.50CC	5.0CC			
1025	25.4	0.25CC	0.50CC	1.00CC	2.00CC	5.00CC	0.30CX	1.00CX
		0.30CC	0.75CC	1.50CC	3.00CC	10.00CC	0.50CX	
2037	50.8	0.50CC	1.00CC	1.50CC	2.00CC			

Specifications

Product Code: TLM2

Substrate Material: N-BK7

S1 Surface Figure: λ/10 @ 633 nm before coating

S1 Surface Quality: 10-5 scratch and dig

S2 Surface Quality: Commercial polish

Diameter Tolerance: Ø +0/–0.25 mm

Thickness Tolerance: t ±0.25 mm

Wedge: ≤5 arc min

Chamfer: 0.35 mm at 45° typical

Concentricity: ≤0.05 mm

Radius Tolerance: ±0.5%

Coating Technology: Electron beam multilayer dielectric

Adhesion and Durability: Per MIL-C-675C. Insoluble in lab solvents.

Clear Aperture: ≥85% of central diameter

Center Wavelength: 780, 800 or 1030 nm

Reflectivity: Please refer to the typical bandwidth tables

Damage Threshold:
Pulsed:
0.28 J/cm2, 50 fsec, 50 Hz @ 800 nm
0.50 J/cm2, 20 nsec, 20 Hz @ 1064 nm

Bandwidth Tolerance: +0/–10% of typical (see graph)

Center Wavelength Tolerance: ±3%

CVI Laser Optics

TUNABLE BROADBAND MIRRORS

The TLM2 mirrors are specially designed to achieve high reflectivity and low dispersion for cw oscillators and low-fluence pulses. These mirrors can be coated for any angle of incidence from 0° to 60° and any center wavelength between 450 nm and 2100 nm for OEM applications. For 45° tuning mirror applications involving very short pulses or very broad bandwidths, CVI Laser Optics recommends using *s* - polarization if possible. This minimizes pulse distortion and maximizes average reflectivity. Check that the bandwidth is realistic by using the typical bandwidth for TLM2 mirror tables, then specify the exact center wavelength and all other parameters in the ordering blocks.

- Designed for Pulse Lengths > 30 fs
- High energy dielectric coating
- Other wavelengths and substrates available upon request
- Contact us for OEM capabilities

Typical Bandwidth for TLM2 mirrors

Center Wavelength (nm)	Bandwidth (nm)		
	R > 99% 0°	R > 99.5%° S	R > 99% 45° P
450	90	113	45
500	100	125	50
550	110	138	55
600	120	150	60
650	130	163	65
700	140	175	70
750	150	188	75
800	156	197	76
850	161	204	76
900	167	212	77
950	171	219	77
1000	180	230	80
1100	193	248	83
1200	210	264	90
1300	221	280	91
1400	238	294	98
1500	255	315	105

IDEX OPTICS & PHOTONICS MARKETPLACE

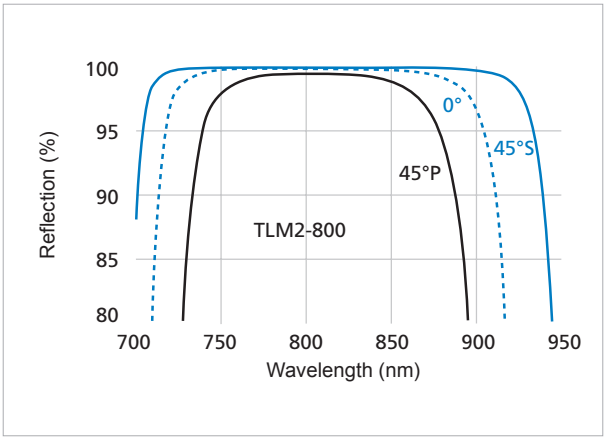

Reflectivity vs wavelength of TLM2-800 broadband laser mirror showing 0° and 45° angle of incidence designs

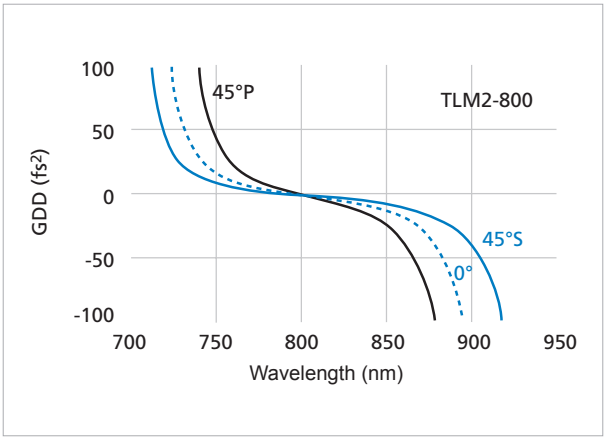

Group velocity dispersion vs wavelength of TLM2-800 broadband laser mirror showing 0° and 45° angle of incidence designs

Standard Products

Wavelength (nm)	Incidence Angle	Ø (mm)	t (mm)	PART NUMBER
Standard TLM2 Laser Line Mirrors				
780	0	25.4	6.35	TLM2-780-45-1025
800	0	12.7	6.35	TLM2-800-0-0525
800	45	12.7	6.35	TLM2-800-45-0525
800	0	25.4	6.35	TLM2-800-0-1025
800	45	25.4	6.35	TLM2-800-45-1025
800	45	25.4	9.53	TLM2-800-45-1537
800	0	50.8	9.53	TLM2-800-0-2037
800	45	50.8	9.53	TLM2-800-45-2037
1030	45	12.7	6.35	TLM2-1030-45-0525
1030	45	25.4	6.35	TLM2-1030-45-1025

CVI Laser Optics

HIGH POWER ND:YAG 532 NM LASER MIRRORS

The Y2 Series of Nd:YAG laser line mirrors utilize durable, dielectric coatings and are readily available in a variety of substrate sizes with curved or flat surfaces.

- Very high damage threshold
- High reflectivity > 99.5% at 0° incidence
- Flat, convex and concave substrates
- Contact CVI Laser Optics for OEM quantities
- Refer to website for bandwidth

Specifications

Product Code: Y2

Substrate Material: UV-grade fused silica

S1 Surface Figure: λ/10 @ 633 nm before coating

S1 Surface Quality: 10-5 scratch and dig

S2 Surface Quality: Commercial polish

Diameter Tolerance: Ø +0/–0.25 mm

Thickness Tolerance: t ±0.25 mm

Wedge: ≤5 arc min

Concentricity: ±0.05 mm

Radius Tolerance: ±0.5%

Coating Technology: Electron beam multilayer dielectric

Adhesion and Durability: Per MIL-C-675C. Insoluble in lab solvents.

Center Wavelength: 532 nm

Reflectivity:
Angle of Incidence 0°:
R≥99.0%
Angle of Incidence 45°:
R≥98.5% for p-polarization
R≥99.0% for unpolarized
R≥99.5% for s-polarization

Clear Aperture: ≥85% of central diameter

Damage Threshold:
Pulsed: 5 J/cm^2, 10 nsec, 20 Hz @ 532 nm
cw: 1 MW/cm^2 @ 532 nm

Standard Products

Wavelength (nm)	Incidence Angle	Ø (mm)	t (mm)	PART NUMBER
High Power Nd:YAG Laser Mirrors for 532 nm				
532	45	12.7	6.35	Y2-0525-45
532	45	19.05	6.35	Y2-0725-45
532	0	25.0	6.0	Y2-2506M-0
532	45	25.0	6.0	Y2-2506M-45
532	0	25.4	6.35	Y2-1025-0
532	45	25.4	6.35	Y2-1025-45
532	45	38.1	9.53	Y2-1537-45
532	45	50.0	10.0	Y2-5010M-45
532	0	50.8	9.53	Y2-2037-0
532	45	50.8	9.53	Y2-2037-45
532	45	76.2	12.7	Y2-3050-45
532	45	101.6	12.7	Y2-4050-45

IDEX OPTICS & PHOTONICS MARKETPLACE

CVI Laser Optics

HIGH POWER ND:YAG 1064 NM LASER MIRRORS

The Y1 Series of Nd:YAG laser line mirrors utilize durable, dielectric coatings and are readily available in a variety of substrate sizes with curved or flat surfaces.

- Very high damage threshold
- High reflectivity > 99.5% at 0° incidence
- Flat, convex and concave substrates
- Contact CVI Laser Optics for OEM quantities
- Refer to website for bandwidth

Specifications

Product Code: Y1

Substrate Material: UV-grade fused silica

S1 Surface Figure: λ/10 @ 633 nm before coating

S1 Surface Quality: 10-5 scratch and dig

S2 Surface Quality: Commercial polish

Diameter Tolerance: Ø +0/–0.25 mm

Thickness Tolerance: t ±0.25 mm

Wedge: ≤5 arc min

Concentricity: ±0.05 mm

Radius Tolerance: ±0.5%

Coating Technology: Electron beam multilayer dielectric

Adhesion and Durability: Per MIL-C-675C. Insoluble in lab solvents.

Center Wavelength: 1064 nm

Reflectivity:
Angle of Incidence 0°:
R≥99.0%
Angle of Incidence 45°:
R≥98.5% for p-polarization
R≥99.0% for unpolarized
R≥99.5% for s-polarization

Clear Aperture: ≥85% of central diameter

Damage Threshold:
Pulsed: 20 J/cm^2, 20 nsec, 20 Hz @ 1064 nm
cw: 10 MW/cm^2 @ 1064 nm

Standard Products

Wavelength (nm)	Incidence Angle	Ø (mm)	t (mm)	PART NUMBER
High Power Nd:YAG Laser Mirrors for 1064 nm				
1064	45	12.7	6.35	Y1-0525-45
1064	45	19.05	6.35	Y1-0725-45
1064	0	25.0	6.0	Y1-2506M-0
1064	45	25.0	6.0	Y1-2506M-45
1064	0	25.4	6.35	Y1-1025-0
1064	45	25.4	6.35	Y1-1025-45
1064	45	38.1	9.53	Y1-1537-45
1064	45	50.0	10.0	Y1-5010M-45
1064	0	50.8	9.53	Y1-2037-0
1064	45	50.8	9.53	Y1-2037-45
1064	45	76.2	12.7	Y1-3050-45
1064	45	101.6	12.7	Y1-4050-45

CVI Laser Optics

PROTECTED SILVER FLAT MIRROR

CVI Laser Optics suggests using the drag and drop method with acetone for the cleaning of these mirrors.

- Designed for Pulse Lengths > 15 fs
- Minimal pulse distortion for ultrafast Ti:Sapphire lasers
- Protected silver has higher reflectance than aluminum throughout the visible and near-infrared spectral region
- A proprietary overcoat provides increased durability
- Contact CVI Laser Optics for OEM capabilities

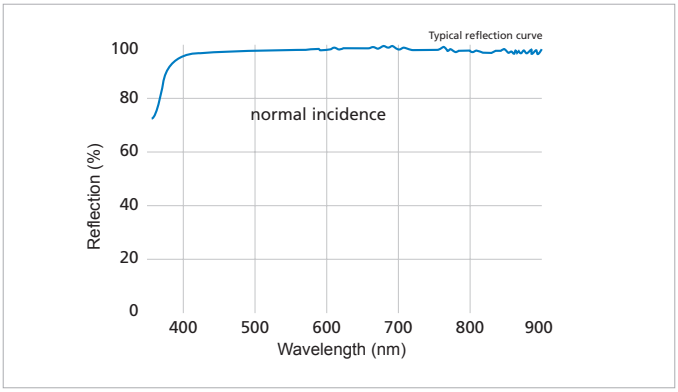

Protected silver coating

Specifications

Product Code: PS

Dimensions:
Square: □±0.25 mm
Round: Ø+0/–0.25 mm

Thickness: t±0.25 mm

Parallelism: ≤5 arc minutes

Clear Aperture:
Round: ≥85% of central diameter
Square: ≥80% of edge dimension

Coating: Protected silver

Average Reflectance: ≥95% (400 nm to 20 µm)

Substrate Material: N-BK7

Standard Products

Shape	Ø (mm)	□ (mm)	t (mm)	Substrate Material	Clear Aperture (mm)	Surface Quality (scratch-dig)	Surface Flatness	PART NUMBER
Protected Silver Flat Mirrors								
Round	12.7	—	6.4	N-BK7	10.8	40-20	λ/10	PS-PM-0525-C
Round	25.0	—	6.0	N-BK7	21.3	40-20	λ/10	PS-PM-2506M-C
Round	25.4	—	6.4	N-BK7	21.6	40-20	λ/10	PS-PM-1025-C
Square	—	25.4	6.4	N-BK7	22.5x22.5	40-20	λ/4	PS-SQM-1025-C
Round	50.0	—	10.0	N-BK7	40.0	40-20	λ/10	PS-PM-5010M-C
Round	50.8	—	9.5	N-BK7	43.2	40-20	λ/10	PS-PM-2037-C
Square	—	50.8	9.5	N-BK7	45.0x45.0	40-20	λ/4	PS-SQM-2037-C
Round	76.2	—	12.7	N-BK7	64.8	40-20	λ/10	PS-PM-3050-C
Round	101.6	—	12.7	N-BK7	86.4	40-20	λ/10	PS-PM-4050-C

IDEX OPTICS & PHOTONICS MARKETPLACE

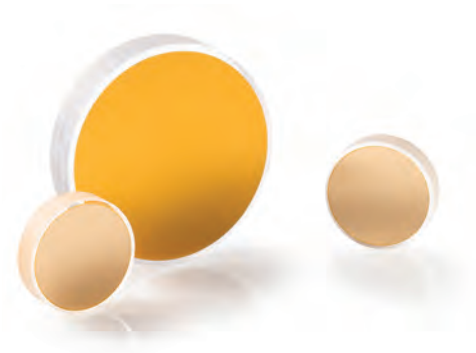

CVI Laser Optics

PROTECTED GOLD FLAT MIRROR

- Protected gold combines the natural spectral performance of gold with the enhanced protection of a durable dielectric overcoat
- Protected gold provides 95.5% average reflectance from 650 to 1700 nm, and over 98% average reflectance from 2 to 20 µm
- Contact CVI Laser Optics for OEM capabilities

Specifications

Product Code: PG

Dimensions:
Square: □±0.25 mm
Round: Ø+0/–0.25 mm

Thickness: t±0.25 mm

Parallelism: ≤5 arc minutes

Clear Aperture:
Round: ≥85% of central diameter
Square: ≥80% of edge dimension

Coating: Protected gold

Average Reflectance:
≥ 95.5% from 650 – 1700 nm,
≥98.0% from 2 – 20 µm

Substrate Material: N-BK7

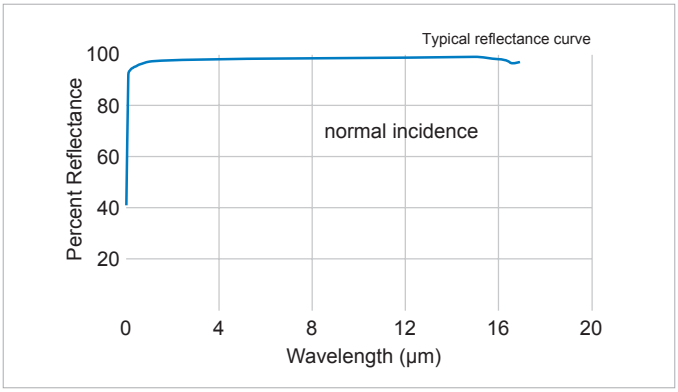

Protected gold coating

Standard Products

Shape	Ø (mm)	□ (mm)	t (mm)	Substrate Material	Clear Aperture (mm)	Surface Quality (scratch-dig)	Surface Flatness	PART NUMBER
Protected Gold Flat Mirrors								
Round	12.7	—	6.4	N-BK7	10.8	40-20	λ/10	PG-PM-0525-C
Round	25.0	—	6.0	N-BK7	21.3	40-20	λ/10	PG-PM-2506M-C
Round	25.4	—	6.4	N-BK7	21.6	40-20	λ/10	PG-PM-1025-C
Square	—	25.4	6.4	N-BK7	22.5x22.5	40-20	λ/4	PG-SQM-1025-C
Round	50.0	—	10.0	N-BK7	45.0	40-20	λ/10	PG-PM-5010M-C
Round	50.8	—	9.5	N-BK7	43.2	40-20	λ/10	PG-PM-2037-C
Square	—	50.8	9.5	N-BK7	45.0x45.0	40-20	λ/4	PG-SQM-2037-C
Round	76.2	—	12.7	N-BK7	64.8	40-20	λ/10	PG-PM-3050-C
Round	101.6	—	12.7	N-BK7	86.4	40-20	λ/10	PG-PM-4050-C

CVI Laser Optics

FEMTOSECOND BEAMSPLITTER

Femtosecond autocorrelator beamsplitters are broadband, 50% all-dielectric beamsplitters.They are useful in many types of pump-probe experiments and in the construction of anti-resonant ring configurations. They are essentially lossless and extremely durable. Both are advantages over partially reflecting metal coatings.

Shown on the following page are power transmission curves for the *s*- and *p*-polarized versions with the corresponding reflected phase characteristics for beamsplitters optimized at 800 nm.The linear pulse propagation properties of these beamsplitters are dominated by the substrate material dispersion. As with virtually all dielectric coated optics, the *s*-polarized version is broader than p-polarized. CVI Laser Optics can produce FABS in other than 50:50 with excellent phase characteristics.

- Designed for Pulse Lengths > 15 fs
- Contact CVI Laser Optics for OEM opportunities

Specifications

Product Code: FABS

Transmission: [1-*R*] first surface

Angle of Incidence: 45°

Polarization: Specify *s*- or *p*-polarization.
Note: Bandwidth is greater for the *s*-polarized version.

Optical Material: UV-grade fused silica

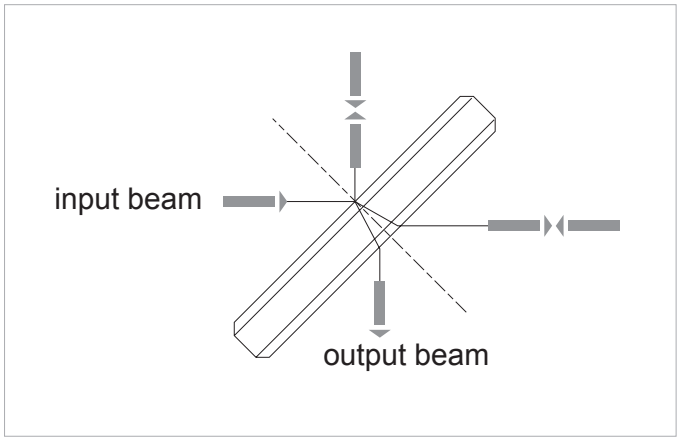

Standard Products

Wavelength (nm)	Incidence Angle	Polarization	Ø (mm)	t (mm)	PART NUMBER
Femtosecond Beamsplitters					
790.0	45	P	25.4	1.0	FABS-790-45P-PW1-1004-UV
790.0	45	S	25.4	1.0	FABS-790-45S-PW1-1004-UV
800.0	45	P	25.4	1.0	FABS-800-45P-PW1-1004-UV
800.0	45	S	25.4	1.0	FABS-800-45S-PW1-1004-UV
1550.0	45	S	25.4	1.0	FABS-1550-45S-PW1-1004-UV

IDEX OPTICS & PHOTONICS MARKETPLACE

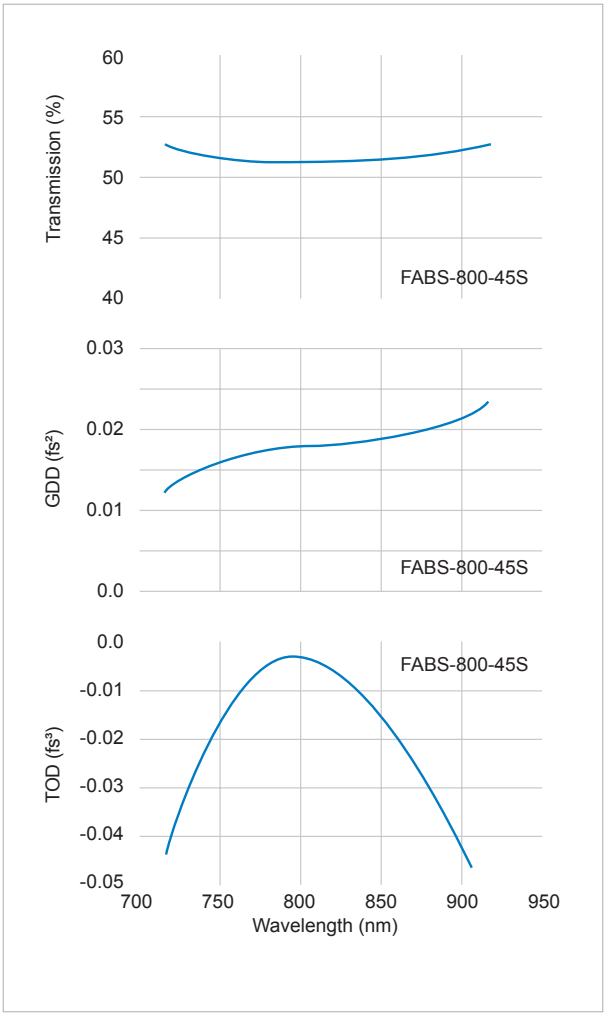

S-Polarized

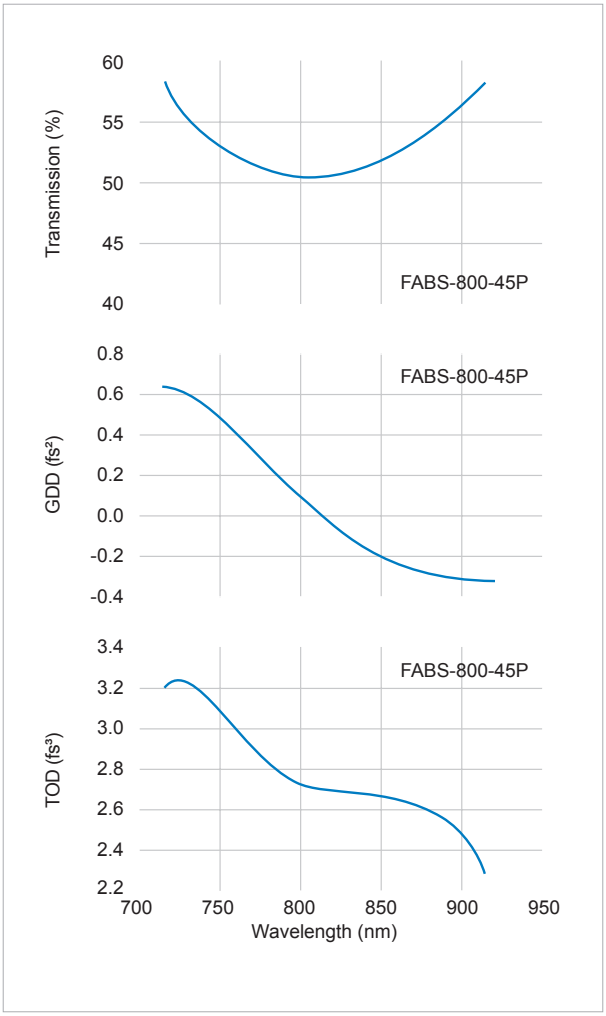

P-Polarized

CVI Laser Optics has developed the TFPK low-dispersion polarizing beamsplitters to satisfy requirements for very-high-power, short-pulse lasers. These optics are ideal for intracavity use in femtosecond regenerative amplifiers. The main emphasis is on linear phase characteristics.

- Designed for Pulse Lengths > 50 fs
- Ideal for intracavity use in femtosecond regenerative amplifiers
- Low group-velocity dispersion for ultrashort femtosecond applications
- Custom wavelengths from 250 – 1550 nm, call for details

Specifications

Product Code: TFPK

Optical Material: UV-grade fused silica

Extinction Ratio: T_p^2/T_s^2 > 15:1 where T_P and T_S are per-surface transmissions

Transmission Efficiency: T_p > 98% for each surface. Slight tilting is required to find angle of minimum loss.

Reflection Efficiency: R_s > 75% each surface. *s*-polarization reflectivities of 85% and 95% are available at some sacrifice of *p*-polarization transmission. Working angle of incidence will increase.

Typical Bandwidth: See curve for 800 nm performance.

Wavelength: 800 nm

Angle of Incidence: 72°±2°

LOW-DISPERSION POLARIZERS

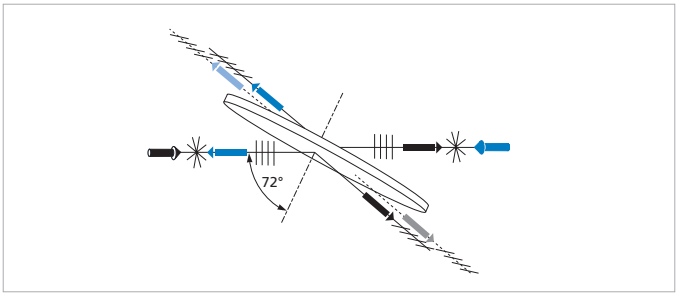

TFPK low-dispersion polarizers

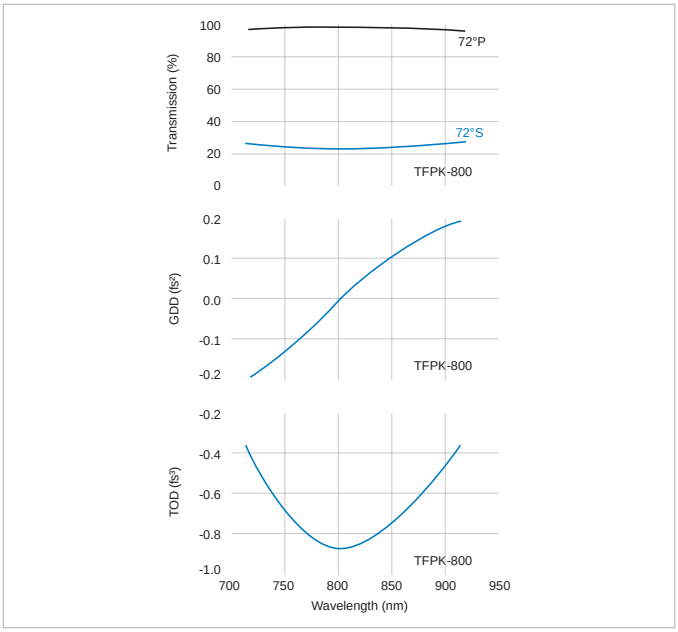

Properties for one coated side of a TFPK polarizing beamsplitter optimized for 800 nm. Both sides are coated for these properties.

Standard Products

Wavelength (nm)	Shape	Dimensions (mm)	t (mm)	PART NUMBER
Low-Dispersion Polarizers				
800	Rectangular	28.6 x 14.3	3.18	TFPK-800-RW-28.6-14.3-3.18-UV
800	Round	∅ 25.4	3.175	TFPK-800-PW1-1012-UV
800	Round	∅ 50.8	6.35	TFPK-800-PW1-2025-UV

OPTICS & PHOTONICS MARKETPLACE

CVI Laser Optics

HIGH-ENERGY BROADBAND POLARIZING CUBE BEAMSPLITTERS

An alternative to calcite and Brewster angle polarizers, the PBSK is an optimal solution for high-energy broadband or multiline systems. Unlike cemented cube polarizers, the PBSK is optically contacted, coated with all-dielectric materials and manufactured from fused silica to ensure high transmission and high damage threshold.

To avoid damage when using a high power laser, be sure to orient the cube so that the beam enters through the prism marked with the dot.

- Designed for Pulse Lengths > 15 fs
- λ/4 reflected and transmitted wavefront distortion
- Damage threshold 5 J/cm^2 at 1064 nm
- Incident and reflected beams separated by 117°
- Contact CVI Laser Optics for other designs between 230 nm and 2100 nm

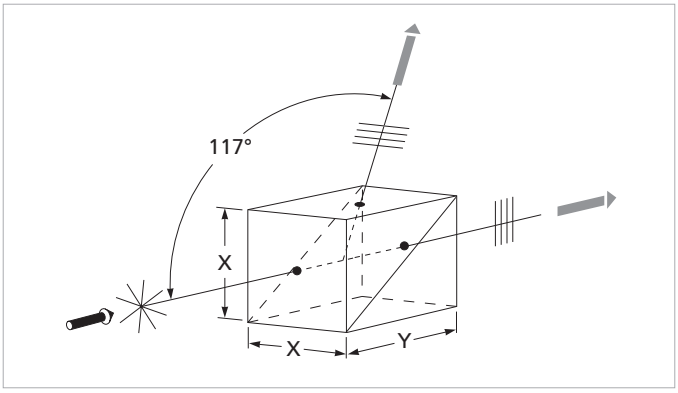

PBSK high-energy broadband polarizing beamsplitter cubes

Specifications

Product Code: PBSK

Optical Material: UV-grade fused silica

Edge Dimension (X,Y): ±0.25 mm

Surface Quality: 20-10 scratch and dig

Transmitted Wavefront Error: λ/4 @ 633 nm

Extinction Ratio: T_p/T_s > 1000:1

Clear Aperture: ≥ 85% of central dimension

Damage Threshold:
Pulsed: 5 J/cm^2, 20 nsec, 20 Hz @ 1064 nm
cw: 1 MW/cm^2 @ 1064 nm

Antireflection Coating: R_{avg} ≤ 0.50%, all entrance and exit surfaces

Standard Products

X x Y (mm)	Transmission Efficiency (Tp)	Wavelength Range (nm)	PART NUMBER
High Energy Broadband Polarizing Cube Beamsplitters			
12.7x17.5	92%	700 – 900	PBSK-700-900-050
15.4x35.3	92%	700 – 900	PBSK-700-900-100

CVI Laser Optics

ISOSCELES BREWSTER PRISMS

Isosceles Brewster angle prisms are designed specifically for intracavity laser applications, usually for specific wavelengths or wavelength ranges. The dispersion of these prisms is less than that of an equilaterial prism, but the beam enters and exits the prism near Brewster's angle, minimizing intracavity losses.

- Designed for Pulse Lengths > 15 fs
- GDD correction prisms for femtosecond systems
- Two sides (AB) optically polished
- Extremely small loss for *p*-polarized beam
- Other dimensions and materials available for OEM applications

Specifications

Product Code: IB-SF10 • IB-SS • IB-UV

Optical Material: N-SF10 glass, Suprasil 1, or UV-grade fused silica

Surface Figure: λ/10 p-v at 633 nm over clear aperture

Surface Quality:
10-5 scratch and dig
(Suprasil 1 and UV-grade fused silica),
30-10 scratch and dig (N-SF10 glass)

Dimensional Tolerance: +0/–0.25 mm

Angular Deviation: ±2 arc min

Chamfer: 0.35 mm at 45° (typical)

Clear Aperture: ≥85% of central dimension

Damage Threshold:
Suprasil 1: 15 J/cm^2, 20 nsec, 20 Hz @ 1064 nm
Fused Silica: 15 J/cm^2, 20 nsec, 20 Hz @ 1064 nm

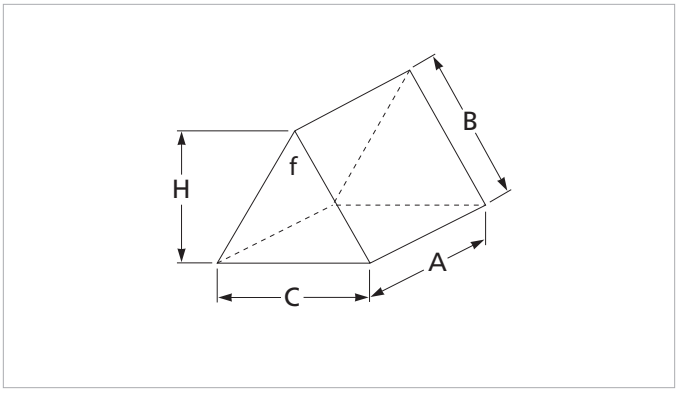

Isosceles Brewster prisms

Standard Products

Optical Material	A (mm)	B (mm)	C (mm)	H (mm)	Ø	Refractive Index @ 633 nm	Design Wavelength (nm)	Refractive Index@ Design WL	PART NUMBER
Isosceles Brewster Prisms									
Suprasil 1	12.7	18.2	20.6	15.0	68.7°	1.45702	488	1.46301	IB-15.0-68.7-SS
Fused Silica	15.0	15.0	17.0	12.4	69.1°	1.45702	800	1.45332	IB-12.4-69.1-UV
N-SF10	15.0	15.0	15.1	13.0	60.6°	1.72314	800	1.7113	IB-13.0-60.6-SF10
N-SF10	25.0	25.0	25.2	21.6	60.6°	1.72314	800	1.7113	IB-21.6-60.6-SF10

IDEX OPTICS & PHOTONICS MARKETPLACE

FILTERS & ETALONS

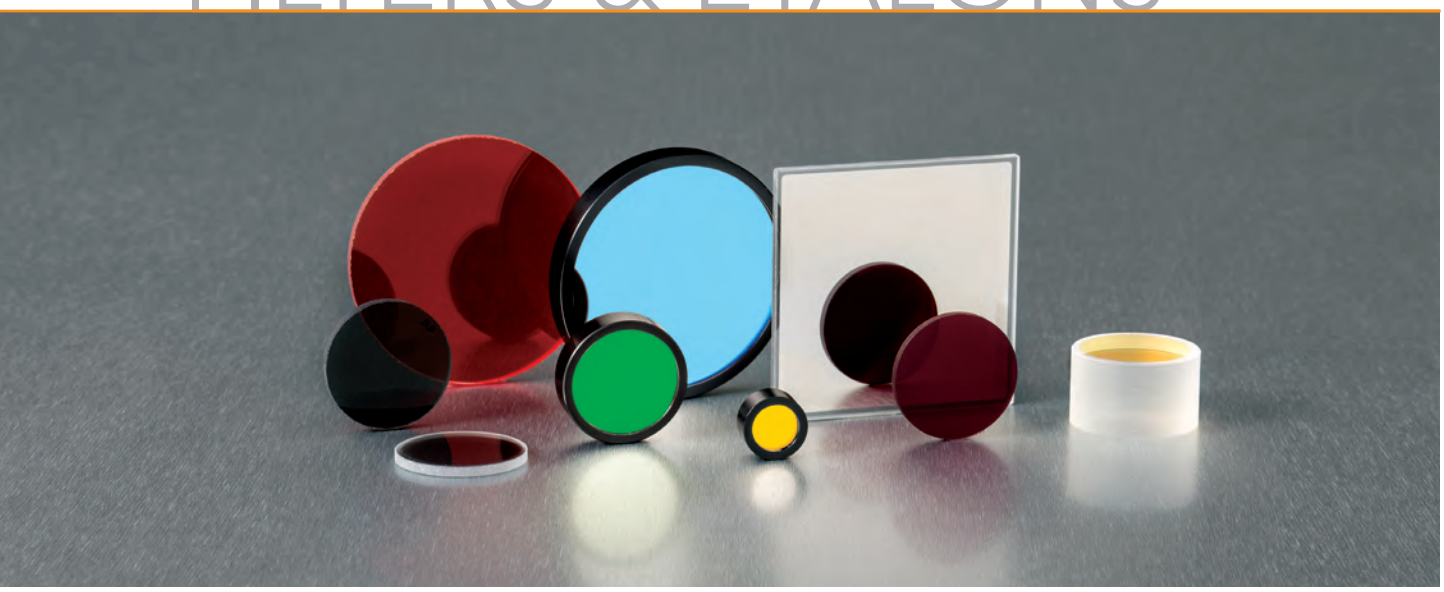

Our suite of optical filters includes everything you need to control the wavelength or intensity of light in your system. Drawing on a combination of color glass, metallic films, and dielectric coatings, we offer almost one thousand filters to allow you to balance price and performance within your application for a perfect fit.

With specifications like > 93% average transmission, OD 6 out of band blocking, and high laser damage threshold, we have the right filter for your most demanding laser applications. Calibration, color-balancing filter glass, and heat-absorbing filters round out the product line.

Etalons transmit light at a series of periodic frequencies, and with very narrow bandwidth, making them well-suited to wavelength selection, measurement and line-narrowing. We allow you to specify the wavelength, thickness, and reflectivity of your etalon and provide it on high quality optics to ensure you get the finesse required for your application.

Please see Pg. IV for the Semi Custom Selection Guide.

SELECTION GUIDE 230

INTERFERENCE FILTERS 232

DURABLE HARD COATED FILTERS 239

COLOR GLASS FILTERS 246

HEAT CONTROL FILTERS 247

NUETRAL DENSITY FILTERS 248

CALIBRATION FILTERS 258

ETALONS 260

SELECTION GUIDE

Diagram	Product Type	FWHM	Transmission (%)	Blocking Optical Density	Applications	Page
Transmission Filters						
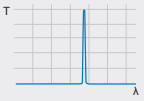	MAXLINE® LASER CLEAN-UP FILTERS	1.2 – 4.0 nm typical	> 90 (typical)	> 6	Fluorescence, Raman, Laser-line clean-up	239
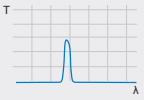	INTERFERENCE FILTERS	1.5 – 70 nm depending on CWL	12–70 (peak) depending on CWL	3 - 4	Laser-line clean-up	232
Blocking Filters						
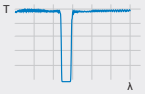	STOPLINE® SINGLE NOTCH FILTERS	17 nm at 532.0 nm	> 93 $_{avg}$	>6	Fluorescence, Raman, Laser-line blocking	244
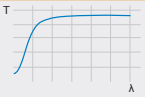	COLOR GLASS	200 - 400 nm	> 80 (typical)	up to 5	Attenuation, Isolation of Broadband Source	246

Diagram	Product Type	Transmission (%)	Blocking Optical Density	Applications	Page
Edge Filters					
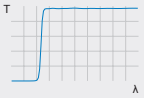	RAZOREDGE® ULTRASTEEP LONG-PASS EDGE FILTERS	>93 $_{avg}$	> 6	Fluorescence, Raman Steepest edge filters on the market E-grade: Transition width < 0.5% of λ_{long} U-grade: Transition width < 1.0% of λ_{long}	240
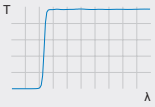	EDGEBASIC™ LONG PASS EDGE FILTERS	>90 $_{avg}$	> 6	Fluorescence, Raman Extended short-wavelength blocking Transition width < 2.5% of λ_{long}	242
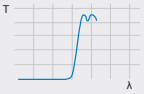	LONG WAVE PASS FILTERS	60 – 80 (peak)	3	Fluorescence, Raman	237
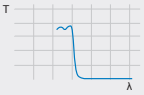	SHORT WAVE PASS FILTERS	50 – 80 (peak)	3	Fluorescence, Raman	238
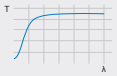	COLOR GLASS	>80 (typical)	up to 5	Attenuation, Isolation of Broadband Source	246

IDEX OPTICS & PHOTONICS MARKETPLACE

SELECTION GUIDE

Diagram	Product Type	Transmission (%)	Blocking Optical Density	Applications	Page
Neutral Density and Specialty Filters					
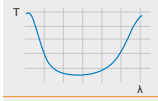	HIGH ENERGY ATTENUATORS	0.01 – 80.0	0.1 - 4.0	Attenuation of high energy laser lines Non-absorbing	246
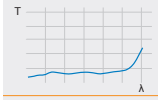	ABSORPTIVE NEUTRAL DENSITY FILTER SETS	0.001 – 89.0	0.05 - 5.0	Broadband attenuation	249
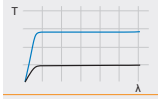	METALLIC NEUTRAL DENSITY FILTERS	0.01 – 79.43	0.1 - 4.0	Broadband attentuation	252
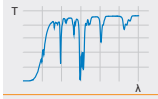	CALIBRATION FILTERS	see Product Page	see Product Page	Broadband attentuation	258
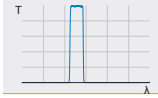	POLARIZATION BANDPASS FILTERS 45°	> 95% $_{abs}$	1,000,000:1 contrast ratio	Clean-up and detection filter	243

CVI Laser Optics

BANDPASS INTERFERENCE FILTERS, UV (193 – 399 nm)

- Out of band rejection of Optical Density 4 average and ≥ OD 3 absolute
- Custom options are available for center wavelength,bandwidth, optical blocking, and size
- Contact a CVI Laser Optics applications engineer for more information

Specifications

Product Code: F-UV

Bandpass Interference Filters: UV (193 - 399 nm)

Diameter: ø +0/–0.25 mm

Thickness: λ_c≤313 nm: 4.0 mm, λ_c ≥325 nm: 6.35 mm

Surface Figure: Commercial Polish

Surface Quality: 80-50 scratch and dig

Center Wavelength: λ_c ±0.2xFWHM, λ_c ≤ 340 nm FWHM is +3/-0 nm

Bandwidth Tolerance: FWHM ±20%

Clear Aperture: ø =12.5 mm: 9.0 mm, ø =25.0 mm: 21.0 mm, ø =50.0 mm: 45.0 mm

Mounting: Black-anodized aluminum ring

Standard Products

λ_c (nm)	FWHM (nm)	Minimum T_{peak} (%)	PART NUMBER				
			12.5 (mm.)	0.5 (in.)	25.0 (mm)	1.00 (in.)	50.0 (mm)
Bandpass Interference Filters, UV (193 - 399 nm)							
193*	15 ± 3	12	F15-193.0-4-12.5M	–	F15-193.0-4-25.0M	–	F15-193.0-4-50.0M
214	10 ± 2	12	F10-214.0-4-12.5M	–	F10-214.0-4-25.0M	–	F10-214.0-4-50.0M
248	10 ± 2	12	F10-248.0-4-12.5M	–	F10-248.0-4-25.0M	–	F10-248.0-4-50.0M
253.7	10 ± 2	12	F10-253.7-4-12.5M	–	F10-253.7-4-25.0M	–	F10-253.7-4-50.0M
265	25 ± 5.0	20	F25-265.0-4-12.5M	–	F25-265.0-4-25.0M	–	F25-265.0-4-50.0M
266	10 ± 2	12	F10-266.0-4-12.5M	–	F10-266.0-4-25.0M	–	F10-266.0-4-50.0M
280	10 ± 2	12	F10-280.0-4-12.5M	–	F10-280.0-4-25.0M	–	F10-280.0-4-50.0M
300	10 ± 2	12	F10-300.0-4-12.5M	–	F10-300.0-4-25.0M	–	F10-300.0-4-50.0M
300	25 ± 5.0	20	F25-300.0-4-12.5M	–	F25-300.0-4-25.0M	–	F25-300.0-4-50.0M
307.1	10 ± 2	20	F10-307.1-4-12.5M	–	F10-307.1-4-25.0M	–	F10-307.1-4-50.0M
310	10 ± 2	15	F10-310.0-4-12.5M	–	F10-310.0-4-25.0M	–	F10-310.0-4-50.0M
330	10 ± 2	25	F10-330.0-4-12.5M	–	F10-330.0-4-25.0M	–	F10-330.0-4-50.0M
337.1	10 ± 2	25	F10-337.1-4-12.5M	–	F10-337.1-4-25.0M	–	F10-337.1-4-50.0M
340	10 ± 2	25	–	F10-340.0-4-0.50	F10-340.0-4-25.0M	F10-340.0-4-1.00	F10-340.0-4-50.0M
350	10 ± 2	25	–	F10-350.0-4-0.50	F10-350.0-4-25.0M	F10-350.0-4-1.00	F10-350.0-4-50.0M
355	10 ± 2	25	–	F10-355.0-4-0.50	F10-355.0-4-25.0M	F10-355.0-4-1.00	F10-355.0-4-50.0M
360	10 ± 2	25	–	F10-360.0-4-0.50	F10-360.0-4-25.0M	F10-360.0-4-1.00	F10-360.0-4-50.0M
365	10 ± 2	25	–	F10-365.0-4-0.50	F10-365.0-4-25.0M	F10-365.0-4-1.00	F10-365.0-4-50.0M
370	10 ± 2	25	–	F10-370.0-4-0.50	F10-370.0-4-25.0M	F10-370.0-4-1.00	F10-370.0-4-50.0M
390	10 ± 2	25	–	F10-390.0-4-0.50	F10-390.0-4-25.0M	F10-390.0-4-1.00	F10-390.0-4-50.0M

IDEX OPTICS & PHOTONICS MARKETPLACE

CVI Laser Optics

BANDPASS INTERFERENCE FILTERS, VISIBLE (400 – 749 nm)

- Out of band rejection of Optical Density 4 average and ≥ OD 3 absolute
- Custom options are available for center wavelength, bandwidth, optical blocking, and size
- Contact a CVI Laser Optics applications engineer for more information

Specifications

Product Code: F-VIS

Bandpass Interference Filters: Visible (400 - 749 nm)

Diameter: ø=0/–0.25 mm

Thickness: 6.35 mm (nominal)

Surface Figure: Commercial Polish

Surface Quality: 80-50 scratch and dig

Center Wavelength: λ_c ± 0.2xFWHM

Bandwidth Tolerance: FWHM±20%

Clear Aperture: ø =12.5 mm: 9.0 mm, ø =25.0 mm: 21.0 mm, ø =50.0 mm: 45.0 mm

Mounting: Black-anodized aluminum ring

Blocking Range: x-ray to 1200 nm

Standard Products

λ_c (nm)	FWHM (nm)	Minimum T_{peak} (%))	PART NUMBER			
			0.50 (in.)	25.0 (mm)	1.00 (in.)	50.0 (mm)
Bandpass Interference Filters, Visible (400 - 749 nm)						
400	10 ± 2	25	F10-400.0-4-0.50	F10-400.0-4-25.0M	F10-400.0-4-1.00	F10-400.0-4-50.0M
400	40 ± 8.0	35	F40-400.0-4-0.50	F40-400.0-4-25.0M	F40-400.0-4-1.00	F40-400.0-4-50.0M
405	10 ± 2	30	F10-405.0-4-0.50	F10-405.0-4-25.0M	F10-405.0-4-1.00	F10-405.0-4-50.0M
410	10 ± 2	35	F10-410.0-4-0.50	F10-410.0-4-25.0M	F10-410.0-4-1.00	F10-410.0-4-50.0M
420	10 ± 2	40	F10-420.0-4-0.50	F10-420.0-4-25.0M	F10-420.0-4-1.00	F10-420.0-4-50.0M
430	10 ± 2	40	F10-430.0-4-0.50	F10-430.0-4-25.0M	F10-430.0-4-1.00	F10-430.0-4-50.0M
435.8	10 ± 2	40	F10-435.8-4-0.50	F10-435.8-4-25.0M	F10-435.8-4-1.00	F10-435.8-4-50.0M
440	10 ± 2	40	F10-440.0-4-0.50	F10-440.0-4-25.0M	F10-440.0-4-1.00	F10-440.0-4-50.0M
450	10 ± 2	45	F10-450.0-4-0.50	F10-450.0-4-25.0M	F10-450.0-4-1.00	F10-450.0-4-50.0M
450	40 ± 8.0	45	F40-450.0-4-0.50	F40-450.0-4-25.0M	F40-450.0-4-1.00	F40-450.0-4-50.0M
450	70 ± 14.0	55	F70-450.0-4-0.50	F70-450.0-4-25.0M	F70-450.0-4-1.00	F70-450.0-4-50.0M
460	10 ± 2	45	F10-460.0-4-0.50	F10-460.0-4-25.0M	F10-460.0-4-1.00	F10-460.0-4-50.0M
470	10 ± 2	45	F10-470.0-4-0.50	F10-470.0-4-25.0M	F10-470.0-4-1.00	F10-470.0-4-50.0M
480	10 ± 2	45	F10-480.0-4-0.50	F10-480.0-4-25.0M	F10-480.0-4-1.00	F10-480.0-4-50.0M
490	10 ± 2	45	F10-490.0-4-0.50	F10-490.0-4-25.0M	F10-490.0-4-1.00	F10-490.0-4-50.0M
500	10 ± 2	45	F10-500.0-4-0.50	F10-500.0-4-25.0M	F10-500.0-4-1.00	F10-500.0-4-50.0M
500	40 ± 8.0	50	F40-500.0-4-0.50	F40-500.0-4-25.0M	F40-500.0-4-1.00	F40-500.0-4-50.0M
500	70 ± 14.0	60	F70-500.0-4-0.50	F70-500.0-4-25.0M	F70-500.0-4-1.00	F70-500.0-4-50.0M

Standard Products

λ_c (nm)	FWHM (nm)	Minimum T_{peak} (%)	PART NUMBER			
			0.50 (in.)	25.0 (mm)	1.00 (in.)	50.0 (mm)
Bandpass Interference Filters, Visible (400 - 749 nm)						
500	70 ± 14.0	60	F70-500.0-4-0.50	F70-500.0-4-25.0M	F70-500.0-4-1.00	F70-500.0-4-50.0M
510	10 ± 2	45	F10-510.0-4-0.50	F10-510.0-4-25.0M	F10-510.0-4-1.00	F10-510.0-4-50.0M
514.5	3 ± 0.6	35	F03-514.5-4-0.50	F03-514.5-4-25.0M	F03-514.5-4-1.00	F03-514.5-4-50.0M
514.5	10 ± 2	50	F10-514.5-4-0.50	F10-514.5-4-25.0M	F10-514.5-4-1.00	F10-514.5-4-50.0M
520	10 ± 2	45	F10-520.0-4-0.50	F10-520.0-4-25.0M	F10-520.0-4-1.00	F10-520.0-4-50.0M
527	10 ± 2	45	F10-527.0-4-0.50	F10-527.0-4-25.0M	F10-527.0-4-1.00	F10-527.0-4-50.0M
530	10 ± 2	45	F10-530.0-4-0.50	F10-530.0-4-25.0M	F10-530.0-4-1.00	F10-530.0-4-50.0M
532	1.5 ± 0.3 30	30	F1.5-532.0-4-0.50	F1.5-532.0-4-25.0M	F1.5-532.0-4-1.00	F1.5-532.0-4-50.0M
532	3 ± 0.6 35	35	F03-532.0-4-0.50	F03-532.0-4-25.0M	F03-532.0-4-1.00	F03-532.0-4-50.0M
532	10 ± 2 45	45	F10-532.0-4-0.50	F10-532.0-4-25.0M	F10-532.0-4-1.00	F10-532.0-4-50.0M
546.1	10 ± 2 45	45	F10-546.1-4-0.50	F10-546.1-4-25.0M	F10-546.1-4-1.00	F10-546.1-4-50.0M
550	10 ± 2 50	50	F10-550.0-4-0.50	F10-550.0-4-25.0M	F10-550.0-4-1.00	F10-550.0-4-50.0M
550	40 ± 8.0 50	50	F40-550.0-4-0.50	F40-550.0-4-25.0M	F40-550.0-4-1.00	F40-550.0-4-50.0M
550	70 ± 14.0	60	F70-550.0-4-0.50	F70-550.0-4-25.0M	F70-550.0-4-1.00	F70-550.0-4-50.0M
560	10 ± 2	50	F10-560.0-4-0.50	F10-560.0-4-25.0M	F10-560.0-4-1.00	F10-560.0-4-50.0M
570	10 ± 2	50	F10-570.0-4-0.50	F10-570.0-4-25.0M	F10-570.0-4-1.00	F10-570.0-4-50.0M
577	10 ± 2	50	F10-577.0-4-0.50	F10-577.0-4-25.0M	F10-577.0-4-1.00	F10-577.0-4-50.0M
580	10 ± 2	50	F10-580.0-4-0.50	F10-580.0-4-25.0M	F10-580.0-4-1.00	F10-580.0-4-50.0M
589.6	1.5 ± 0.3 35	35	F1.5-589.6-4-0.50	F1.5-589.6-4-25.0M	F1.5-589.6-4-1.00	F1.5-589.6-4-50.0M
600	10 ± 2 50	50	F10-600.0-4-0.50	F10-600.0-4-25.0M	F10-600.0-4-1.00	F10-600.0-4-50.0M
600	40 ± 8.0 50	50	F40-600.0-4-0.50	F40-600.0-4-25.0M	F40-600.0-4-1.00	F40-600.0-4-50.0M
630	10 ± 2 50	50	F10-630.0-4-0.50	F10-630.0-4-25.0M	F10-630.0-4-1.00	F10-630.0-4-50.0M
632.8	10 ± 2 50	50	F10-632.8-4-0.50	F10-632.8-4-25.0M	F10-632.8-4-1.00	F10-632.8-4-50.0M
635	10 ± 2 50	50	F10-635.0-4-0.50	F10-635.0-4-25.0M	F10-635.0-4-1.00	F10-635.0-4-50.0M
650	10 ± 2 50	50	F10-650.0-4-0.50	F10-650.0-4-25.0M	F10-650.0-4-1.00	F10-650.0-4-50.0M
650	40 ± 8.0 50	50	F40-650.0-4-0.50	F40-650.0-4-25.0M	F40-650.0-4-1.00	F40-650.0-4-50.0M
656.2	1.5 ± 0.3	35	F1.5-656.2-4-0.50	F1.5-656.2-4-25.0M	F1.5-656.2-4-1.00	F1.5-656.2-4-50.0M
656.2	10 ± 2	50	F10-656.2-4-0.50	F10-656.2-4-25.0M	F10-656.2-4-1.00	F10-656.2-4-50.0M
660	10 ± 2	50	F10-660.0-4-0.50	F10-660.0-4-25.0M	F10-660.0-4-1.00	F10-660.0-4-50.0M
670	10 ± 2	50	F10-670.0-4-0.50	F10-670.0-4-25.0M	F10-670.0-4-1.00	F10-670.0-4-50.0M
676.4	3 ± 0.6	40	F03-676.4-4-0.50	F03-676.4-4-25.0M	F03-676.4-4-1.00	F03-676.4-4-50.0M
680	10 ± 2	50	F10-680.0-4-0.50	F10-680.0-4-25.0M	F10-680.0-4-1.00	F10-680.0-4-50.0M
700	10 ± 2	50	F10-700.0-4-0.50	F10-700.0-4-25.0M	F10-700.0-4-1.00	F10-700.0-4-50.0M
700	40 ± 8.0	50	F40-700.0-4-0.50	F40-700.0-4-25.0M	F40-700.0-4-1.00	F40-700.0-4-50.0M
730	10 ± 2	50	F10-730.0-4-0.50	F10-730.0-4-25.0M	F10-730.0-4-1.00	F10-730.0-4-50.0M

IDEX OPTICS & PHOTONICS MARKETPLACE

CVI Laser Optics

BANDPASS INTERFERENCE FILTERS, NEAR IR (750 – 1900 nm)

- Out of band rejection of OD 4 average and ≥ OD 3 absolute
- Custom options are available for center wavelength, bandwidth, optical blocking, and size
- Contact an applications engineer for more information on custom parts

Specifications

Product Code: F-NIR

Bandpass Interference Filters: Near IR (750 - 1900 nm)

Diameter: ø +0/–0.25 mm

Thickness: 6.35 mm (nominal)

Surface Figure: Commercial Polish

Surface Quality: 80-50 scratch and dig

Center Wavelength: λ_c ± 0.2xFWHM

Bandwidth Tolerance: FWHM ± 20%

Clear Aperture: ø=12.5 mm: 9.0 mm, ø=25.0 mm:

21.0 mm, ø=50.0 mm: 45.0 mm

Mounting: Black-anodized aluminum ring

Blocking Range: x-ray to 3500+ nm

Standard Products

λ_c (nm)	FWHM (nm)	Minimum T_{peak} (%)	PART NUMBER			
			0.50 (in.)	25.0 (mm)	1.00 (in.)	50.0 (mm)
Bandpass Interference Filters, Near IR (750 - 1900 nm)						
750	10 ± 2	50	F10-750.0-4-0.50	F10-750.0-4-25.0M	F10-750.0-4-1.00	F10-750.0-4-50.0M
750	40 ± 8	.0 50	F40-750.0-4-0.50	F40-750.0-4-25.0M	F40-750.0-4-1.00	F40-750.0-4-50.0M
770	10 ± 2	50	F10-770.0-4-0.50	F10-770.0-4-25.0M	F10-770.0-4-1.00	F10-770.0-4-50.0M
780	10 ± 2	50	F10-780.0-4-0.50	F10-780.0-4-25.0M	F10-780.0-4-1.00	F10-780.0-4-50.0M
785	10 ± 2	50	F10-785.0-4-0.50	F10-785.0-4-25.0M	F10-785.0-4-1.00	F10-785.0-4-50.0M
794.7	1.5 ± 0.3	35	F1.5-794.7-4-0.50	F1.5-794.7-4-25.0M	F1.5-794.7-4-1.00	F1.5-794.7-4-50.0M
794.7	3 ± 0.6	40	F03-794.7-4-0.50	F03-794.7-4-25.0M	F03-794.7-4-1.00	F03-794.7-4-50.0M
800	10 ± 2	50	F10-800.0-4-0.50	F10-800.0-4-25.0M	F10-800.0-4-1.00	F10-800.0-4-50.0M
800	40 ± 8	.0 45	F10-800.0-4-0.50	F10-800.0-4-25.0M	F10-800.0-4-1.00	F10-800.0-4-50.0M

Standard Products

λ_c (nm)	FWHM (nm)	Minimum T_{peak} (%)	PART NUMBER			
			0.50 (in.)	25.0 (mm)	1.00 (in.)	50.0 (mm)
Bandpass Interference Filters, Near IR (750 - 1900 nm)						
800	70 ± 14.0	60	F40-800.0-4-0.50	F40-800.0-4-25.0M	F40-800.0-4-1.00	F40-800.0-4-50.0M
810	10 ± 2	50	F70-800.0-4-0.50	F70-800.0-4-25.0M	F70-800.0-4-1.00	F70-800.0-4-50.0M
820	10 ± 2	50	F10-810.0-4-0.50	F10-810.0-4-25.0M	F10-810.0-4-1.00	F10-810.0-4-50.0M
830	10 ± 2	50	F10-820.0-4-0.50	F10-820.0-4-25.0M	F10-820.0-4-1.00	F10-820.0-4-50.0M
850	10 ± 2	50	F10-830.0-4-0.50	F10-830.0-4-25.0M	F10-830.0-4-1.00	F10-830.0-4-50.0M
850	40 ± 8	50	F10-850.0-4-0.50	F10-850.0-4-25.0M	F10-850.0-4-1.00	F10-850.0-4-50.0M
900	10 ± 2	50	F40-850.0-4-0.50	F40-850.0-4-25.0M	F40-850.0-4-1.00	F40-850.0-4-50.0M
900	40 ± 8.0	45	F10-900.0-4-0.50	F10-900.0-4-25.0M	F10-900.0-4-1.00	F10-900.0-4-50.0M
950	10 ± 2	45	F40-900.0-4-0.50	F40-900.0-4-25.0M	F40-900.0-4-1.00	F40-900.0-4-50.0M
950	40 ± 8.0	45	F10-950.0-4-0.50	F10-950.0-4-25.0M	F10-950.0-4-1.00	F10-950.0-4-50.0M
1000	10 ± 2	45	F40-950.0-4-0.50	F40-950.0-4-25.0M	F40-950.0-4-1.00	F40-950.0-4-50.0M
1000	70 ± 14.0	60	F10-1000.0-4-0.50	F10-1000.0-4-25.0M	F10-1000.0-4-1.00	F10-1000.0-4-50.0M
1030	10 ± 2	45	F70-1000.0-4-0.50	F70-1000.0-4-25.0M	F70-1000.0-4-1.00	F70-1000.0-4-50.0M
1050	10 ± 2	45	F10-1050.0-4-0.50	F10-1050.0-4-25.0M	F10-1050.0-4-1.00	F10-1050.0-4-50.0M
1053	10 ± 2	45	F10-1053.0-4-0.50	F10-1053.0-4-25.0M	F10-1053.0-4-1.00	F10-1053.0-4-50.0M
1064	3 ± 0.6	40	F03-1064.0-4-0.50	F03-1064.0-4-25.0M	F03-1064.0-4-1.00	F03-1064.0-4-50.0M
1064	10 ± 2	50	F10-1064.0-4-0.50	F10-1064.0-4-25.0M	F10-1064.0-4-1.00	F10-1064.0-4-50.0M
1070	10 ± 2	45	F10-1070.0-4-0.50	F10-1070.0-4-25.0M	F10-1070.0-4-1.00	F10-1070.0-4-50.0M
1200	10 ± 2	40	F10-1200.0-4-0.50	F10-1200.0-4-25.0M	F10-1200.0-4-1.00	F10-1200.0-4-50.0M
1550*	10 ± 2	50	F10-1550.0-3-0.50	F10-1550.0-3-25.0M	F10-1550.0-3-1.00	F10-1550.0-3-50.0M
1900*	10 ± 2	35	F10-1900.0-3-0.50	F10-1900.0-3-25.0M	F10-1900.0-3-1.00	F10-1900.0-3-50.0M

IDEX OPTICS & PHOTONICS MARKETPLACE

- Long wavepass filters are available individually or as filter sets for visible, near IR, and IR wavelength ranges
- Call CVI Laser Optics for information on IR wavelength filters

Specifications

Product Code: LPF

Clear Aperture: ø=12.5 mm: 9.0 mm, ø=25.0 mm: 21.0 mm, ø=50.0 mm: 45.0 mm

Thickness: 6.4 mm (typical)

Surface Figure: Commercial polish

Surface Quality: 80-50 scratch and dig

Mounting: Black-anodized aluminum ring

Cut-On Wavelength: $\lambda_c \pm 10$ nm, 50% of peak transmittance

Blocking Range (≥OD 3): from x-ray to 85% of cut-on

Transmittance Range: λ_c to 2500 nm

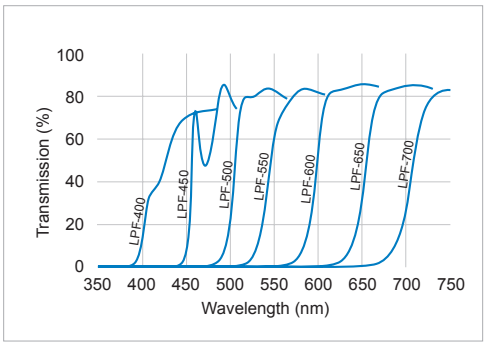

Visible long wavepass filter

LONG WAVEPASS FILTERS

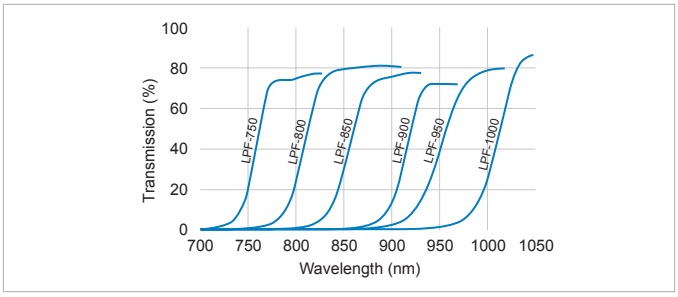

Near infrared long wavepass filter

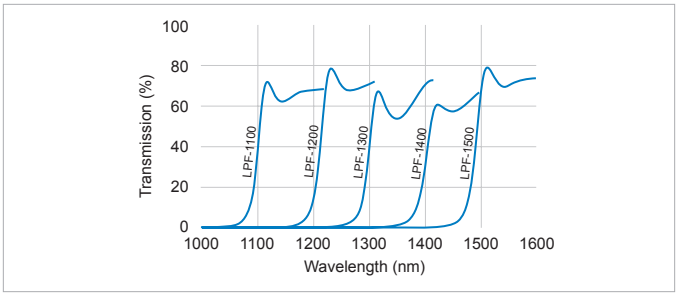

Infrared long wavepass filter

Standard Products

λ_c (nm)	PART NUMBER			
	12.7 (mm)	25.0 (mm)	1.00 (in.)	50.0 (mm)
Long Wavepass Filters				
400.0	LPF-400-0.50	LPF-400-25.0M	LPF-400-1.00	LPF-400-50.0M
450.0	LPF-450-0.50	LPF-450-25.0M	LPF-450-1.00	LPF-450-50.0M
500.0	LPF-500-0.50	LPF-500-25.0M	LPF-500-1.00	LPF-500-50.0M
550.0	LPF-550-0.50	LPF-550-25.0M	LPF-550-1.00	LPF-550-50.0M
600.0	LPF-600-0.50	LPF-600-25.0M	LPF-600-1.00	LPF-600-50.0M
650.0	LPF-650-0.50	LPF-650-25.0M	LPF-650-1.00	LPF-650-50.0M
700.0	LPF-700-0.50	LPF-700-25.0M	LPF-700-1.00	LPF-700-50.0M
750.0	LPF-750-0.50	LPF-750-25.0M	LPF-750-1.00	LPF-750-50.0M
800.0	LPF-800-0.50	LPF-800-25.0M	LPF-800-1.00	LPF-800-50.0M
850.0	LPF-850-0.50	LPF-850-25.0M	LPF-850-1.00	LPF-850-50.0M
900.0	LPF-900-0.50	LPF-900-25.0M	LPF-900-1.00	LPF-900-50.0M
950.0	LPF-950-0.50	LPF-950-25.0M	LPF-950-1.00	LPF-950-50.0M
1000.0	LPF-1000-0.50	LPF-1000-25.0M	LPF-1000-1.00	LPF-1000-50.0M
1100.0	LPF-1100-0.50	LPF-1100-25.0M	LPF-1100-1.00	LPF-1100-50.0M
1200.0	LPF-1200-0.50	LPF-1200-25.0M	LPF-1200-1.00	LPF-1200-50.0M
1300.0	LPF-1300-0.50	LPF-1300-25.0M	LPF-1300-1.00	LPF-1300-50.0M
1400.0	LPF-1400-0.50	LPF-1400-25.0M	LPF-1400-1.00	LPF-1400-50.0M
1500.0	LPF-1500-0.50	LPF-1500-25.0M	LPF-1500-1.00	LPF-1500-50.0M

CVI Laser Optics

SHORT WAVEPASS FILTERS

- Short wavepass filters are available individually or as filter sets for visible and near IR wavelength ranges
- Call CVI Laser Optics for information on IR wavelength filters

Specifications

Product Code: SPF

Clear Aperture: ø=12.5 mm: 9.0 mm, ø=25.0 mm: 21.0 mm, ø=50.0 mm: 45.0 mm

Thickness: 6.4 mm (typical)

Surface Figure: Commercial polish

Surface Quality: 80-50 scratch and dig

Mounting: Black-anodized aluminum ring

Cut-Off Wavelength*: $\lambda_c \pm 10$ nm

Blocking Range (≥OD 3): 120% of λ_c to 1200 nm

Transmittance Range: From 415 nm to λ_c, except SPF-400 and SPF-450 are from 370 nm to λ_c.

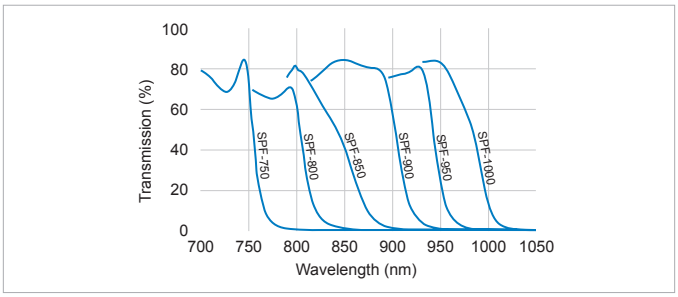

Near infrared short wavepass filter

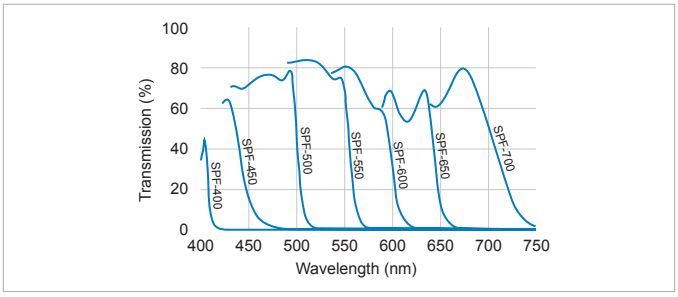

Visible short wavepass filter

Standard Products

λ_c (nm)	PART NUMBER			
	12.7 (mm)	25.0 (mm)	1.00 (in.)	50.0 (mm)
Long Wavepass Filters				
400.0	SPF-400-0.50	SPF-400-25.0M	SPF-400-1.00	SPF-400-50.0M
450.0	SPF-450-0.50	SPF-450-25.0M	SPF-450-1.00	SPF-450-50.0M
500.0	SPF-500-0.50	SPF-500-25.0M	SPF-500-1.00	SPF-500-50.0M
550.0	SPF-550-0.50	SPF-550-25.0M	SPF-550-1.00	SPF-550-50.0M
600.0	SPF-600-0.50	SPF-600-25.0M	SPF-600-1.00	SPF-600-50.0M
650.0	SPF-650-0.50	SPF-650-25.0M	SPF-650-1.00	SPF-650-50.0M
700.0	SPF-700-0.50	SPF-700-25.0M	SPF-700-1.00	SPF-700-50.0M
750.0	SPF-750-0.50	SPF-750-25.0M	SPF-750-1.00	SPF-750-50.0M
800.0	SPF-800-0.50	SPF-800-25.0M	SPF-800-1.00	SPF-800-50.0M
850.0	SPF-850-0.50	SPF-850-25.0M	SPF-800-1.00	SPF-850-50.0M
900.0	SPF-900-0.50	SPF-900-25.0M	SPF-900-1.00	SPF-900-50.0M
950.0	SPF-950-0.50	SPF-950-25.0M	SPF-950-1.00	SPF-950-50.0M
1000.0	SPF-1000-0.50	SPF-1000-25.0M	SPF-1000-1.00	SPF-1000-50.0M

IDEX OPTICS & PHOTONICS MARKETPLACE

Semrock

MAXLINE® LASER CLEAN-UP FILTERS

MaxLine® laser-line filters transmit greater than 90% of the light at a precisely defined laser line, while offering incredibly steep edges to eliminate optical noise from non-lasing (plasma) lines and spontaneous emission.

- Raman spectroscopy
- Highest laser-line transmission for clean-up
- Steep edges for maximum out-of-band rejection
- Hard dielectric sputtered coatings for proven environmental stability and durability
- Custom sizing available in less than a week (sizing fee applies)

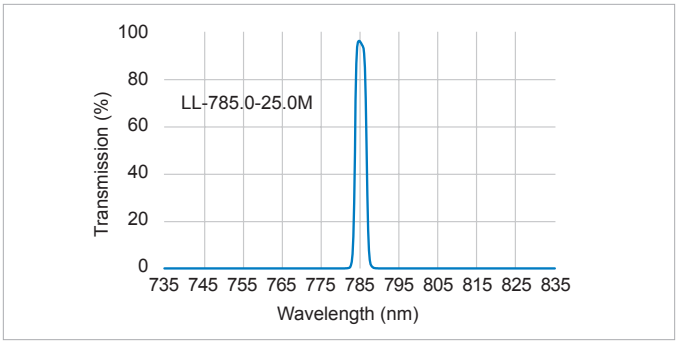

Typical transmission for Semrock MaxLine® 785.0 nm laser clean-up filter

Specifications

Product Code: LL

Clear Aperture: ø=12.5 mm: 10. mm, ø=25.0 mm: 22.0 mm

Damage Threshold: 0.1 J/cm² @ 532 nm (10 ns pulse width)

Thickness: 3.5 mm ± 0.1 mm

Surface Quality: 60–40 scratch and dig

Angle of Incidence: 0° ± 2.0°

Cone Half-angle: 0.5°

Mounting: Black-anodized aluminum ring

Orientation: Arrow on ring indicates preferred direction of propagation of light

Standard Products

λ_c (nm)	Typical Bandwidth (nm)	Maximum Bandwidth (nm)	T (%)	BLUE SHIFT OD>5$_{abs}$	BLUE SHIFT OD>6$_{abs}$	RED SHIFT OD>6$_{abs}$	RED SHIFT OD>5$_{abs}$	PART NUMBER	
				λ (nm)	λ (nm)	λ (nm)	λ (nm)	λ 12.5 mm	λ 25.0 mm
Semrock MaxLine® Laser Clean-up Filters									
325.0	1.2	2.3	> 80%	291.0–321.8	299.0–320.1	329.9–357.5	328.3–380.7	LL-325.0-12.5M	LL-325.0-25.0M
355.0	1.3	2.5	> 80%	314.8–351.5	326.6–349.7	360.3–390.5	358.6–422.5	LL-355.0-12.5M	LL-355.0-25.0M
488.0	1.9	3.4	> 90%	415.1–483.1	449.0–480.7	495.3–536.8	492.9–625.3	LL-488.0-12.5M	LL-488.0-25.0M
514.5	2.0	3.6	> 90%	434.1–509.4	473.3–506.8	522.2–566.0	519.6–669.5	LL-514.5-12.5M	LL-514.5-25.0M
532.0	2.0	3.7	> 90%	446.5–526.7	489.4–524.0	540.0–585.2	537.3–699.4	LL-532.0-12.5M	LL-532.0-25.0M
632.8	2.4	4.4	> 90%	515.4–626.5	582.2–623.3	642.3–696.1	639.1–884.7	LL-632.8-12.5M	LL-632.8-25.0M
647.1	2.5	4.5	> 90%	524.8–640.6	595.3–637.4	656.8–711.8	653.6–912.9	LL-647.1-12.5M	LL-647.1-25.0M
780.0	3.0	5.5	> 90%	609.0–772.2	717.6–768.3	791.7–858.0	787.8–1201.8	LL-780.0-12.5M	LL-780.0-25.0M
785.0	3.0	5.5	> 90%	612.0–777.2	722.2–773.2	796.8–863.5	792.9–1213.8	LL-785.0-12.5M	LL-785.0-25.0M
808.0	3.1	5.7	> 90%	625.9–799.9	743.4–795.9	820.1–888.8	816.1–1033.5	LL-808.0-12.5M	LL-808.0-25.0M
1064.0	4.0	7.4	> 90%	978.9–1053.4	978.9–1048.0	1080.0–1170.4	1074.6–1428.9	LL-1064 - 12.5M	LL-1064.0-25.0M

RAZOREDGE® ULTRASTEEP LONG-PASS EDGE FILTERS

- Ideal for Raman spectroscopy measurements
- Steepest edge filters on the market (E grade designs)
- Long wave pass edge filters for 0°
- Custom sizing available in less than a week (sizing fee applies)

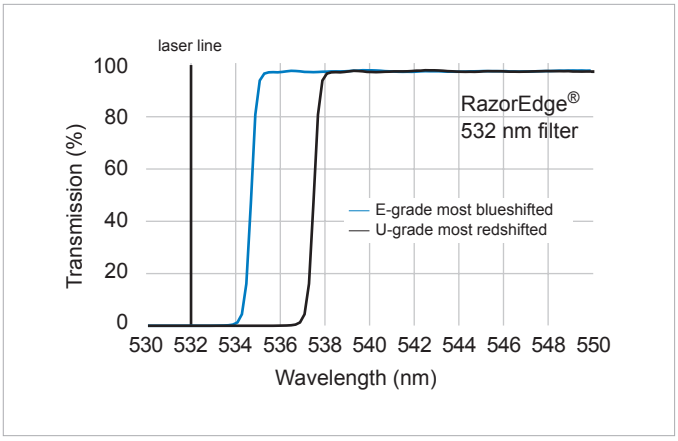

Specifications

Product Code: LPRE

Coating Technology: "Hard" Ion Beam Sputtering

Optical Material: Fused Silica

Laser Line Blocking: > OD 6_{abs} at λc

Angle of Incidence: 0° ± 2°

Cone Half–angle: <5°

Laser Damage Threshold: 0.5 J/cm^2, 10 nsec at 266 nm, 1 J/cm^2, 10 nsec at 532 nm

Diameter: 25.0 mm

Diameter Tolerance: +0.0/- 0.1 mm

Clear Aperture: ≥ 22.0 mm

Thickness: 3.5 mm

Thickness Tolerance: ± 0.1 mm

Surface Quality: 60-40 scratch and dig

Mounting: Black Anodized Aluminum Ring

Orientation: Arrow on ring indicates preferred direction of propagation of light

Standard Products

Laser λ_c (nm)	Typical Blocking Band (OD 6_{avg})	Transmission Band (T > $90\%_{avg}$)	Transition Width (nm)	Transition Width (cm^{-1})	Edge Steepness (%)	Edge Steepness (nm)	Edge Steepness (cm^{-1})	PART NUMBER
Semrock RazorEdge® Ultrasteep Long-pass Edge Filters								
266.0	217.0 – 266.0 nm	272.4 – 600.0 nm	2.7	372	0.8	2.1	298.4	LPRE-266.0-U-25.0M
325.0	200.0 – 325.0 nm	329.2 – 733.1 nm	3.3	305	0.5	1.6	153.1	LPRE-325.0-U-25.0M
355.0	200.0 – 355.0 nm	357.3 – 800.8 nm	1.8	140	0.2	0.7	56.0	LPRE-355.0-E-25.0M
355.0	200.0 – 355.0 nm	359.6 – 800.8 nm	3.6	279	0.5	1.8	140.1	LPRE-355.0-U-25.0M
488.0	394.0 – 488.0 nm	491.2 – 1100.8 nm	2.4	102	0.2	1.0	40.9	LPRE-488.0-E-25.0M
488.0	394.0 – 488.0 nm	494.3 – 1100.8 nm	4.9	203	0.5	2.4	101.9	LPRE-488.0-U-25.0M
514.5	416.0 – 514.5 nm	517.8 – 1160.5 nm	2.6	97	0.2	1.0	38.8	LPRE-514.5-E-25.0M
514.5	416.0 – 514.5 nm	521.2 – 1160.5 nm	5.1	192	0.5	2.6	96.7	LPRE-514.5-U-25.0M
532.0	430.0 – 532.0 nm	535.4 – 1200.0 nm	2.7	90	0.2	1.1	37.5	LPRE-532.0-E-25.0M
532.0	430.0 – 532.0 nm	538.9 – 1200.0 nm	5.3	186	0.5	2.7	93.5	LPRE-532.0-U-25.0M
632.8	513.0 – 632.8 nm	636.9 – 1427.4 nm	3.2	79	0.2	1.3	31.5	LPRE-633.0-E-25.0M
632.8	513.0 – 632.8 nm	641.0 – 1427.4 nm	6.3	156	0.5	3.2	78.6	LPRE-633.0-U-25.0M
785.0	638.0 – 785.0 nm	790.1 – 1770.7 nm	3.9	63	0.2	1.6	25.4	LPRE-785.0-E-25.0M
785.0	638.0 – 785.0 nm	795.2 – 1770.7 nm	7.9	126	0.5	3.9	63.4	LPRE-785.0-U-25.0M
1064.0	831.0 – 1064.0 nm	1077.8 – 2000.0 nm	10.6	93	0.5	5.3	46.8	LPRE-1064.0-U-25.0M

Semrock

EDGEBASIC™ LONG PASS EDGE FILTERS

Semrock EdgeBasic™ Long Pass Edge Filters offer an ideal combination of performance and value for applications including Raman spectroscopy and fluorescence imaging and measurements.

- Deep laser-line blocking (OD > 6)
- Extended short-wavelength blocking
- Custom sizing available in less than a week (sizing fee applies)

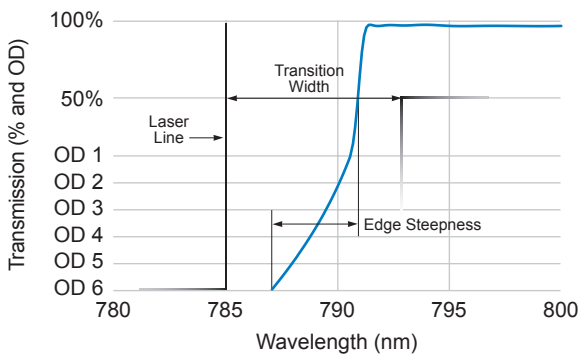

Transition Width = maximum allowed spectral width between the laser line (where OD > 6) and the 50% transmission point

Edge Steepness = actual steepness of a filter measured from the OD 6 point to the 50% transmission point

Specifications

Product Code: LPEB

Edge Steepness (typical): 1.5% of λ_{long}
Measured from OD 6 to 50%

Blocking at Laser: OD > 6 from 80% of λ_{short} to λ_{long}

Wavelengths: OD > 5 from 270 nm to 80% of λ_{short}

Transition Width: < 2.5% of λ_{long}

Guaranteed Transmission: > $93\%_{avg}$ over Passband

Typical Transmission: > $98\%_{avg}$ over Passband

Minimum Transmission: > 90% over Passband

Angle of Incidence: 0.0° ± 2.0°

Cone Half Angle: < 5°

Substrate Material: Fused Silica

Clear Aperture: > 22 mm

Outer Diameter: 25.0 +0.0/- 0.1 mm

Overall Thickness: 3.5 ± 0.1 mm

Beam Deviation: < 10 arc seconds

Surface Quality: 60–40 scratch and dig

Filter Orientation: Arrow on ring indicates preferred direction of propagation of light

Standard Products

Nominal Laser Wavelength	λ_{short}	λ_{long}	Passband	ø mm	PART NUMBER
Semrock EdgeBasic™ Long Pass Edge Filters					
405 nm	400.0 nm	410.0 nm	421.5 – 900.0 nm	25.0	LPEB-405.0-25.0M
458 nm	439.0 nm	457.9 nm	470.0 – 900.0 nm	25.0	LPEB-458.0-25.0M
488 nm	486.0 nm	491.0 nm	504.7 – 900.0nm	25.0	LPEB-488.0-25.0M
515 nm	505.0 nm	515.0 nm	529.4 – 900.0 nm	25.0	LPEB-514.0-25.0M
532 nm	532.0 nm	532.0 nm	546.9 – 900.0 nm	25.0	LPEB-532.0-25.0M
561 nm	561.0 nm	568.0 nm	584.1 – 900.0 nm	25.0	LPEB-561.0-25.0M
594 nm	593.5 nm	594.1 nm	610.9 – 900.0 nm	25.0	LPEB-594.0-25.0M
635 nm	632.8 nm	642.0 nm	660.0 – 1200.0 nm	25.0	LPEB-635.0-25.0M
785 nm	780.0 nm	790.0 nm	812.1 – 1200.0 nm	25.0	LPEB-785.0-25.0M

IDEX OPTICS & PHOTONICS MARKETPLACE

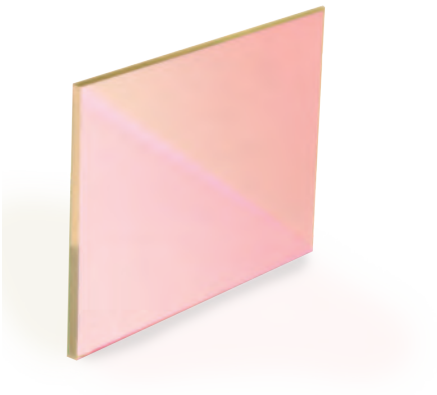

Semrock

POLARIZATION BANDPASS FILTERS, 45°

Semrock Polarization Bandpass Filters combine a highly efficient polarizer and a bandpass filter in a single optical component. These excellent linear polarizers have a contrast ratio exceeding 1,000,000 to 1. Because of their high-performance bandpass characteristics, they make excellent laser clean-up filters as well as detection filters.

- Contrast ratio > 1,000,000:1
- High Transmission >95%
- Optimized passband for *p*-polarized light
- Wide AOI range when used with nominal laser wavelength
- Hard coating reliablity
- High laser damage threshold 1 J/cm²
- Custom sizing available in less than a week (sizing fee applies)

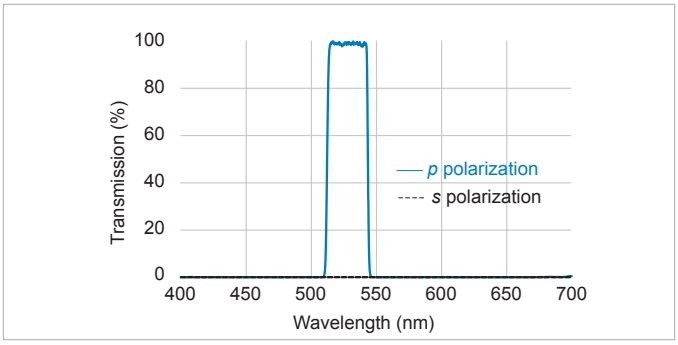

Semrock Polarization Bandpass Filters offer a superior linear polarizer and optimized bandpass filter in a single optical component

Specifications

Product Code: PBP

Guaranteed Transmission: > 95% *p*–polarized light

Contrast: 1,000,000:1

Nominal Angle of Incidence: 45°

Substrate Material: Ultra-low autofluorescence fused silica

Dimension & Tolerance: 25.2 mm x 35.6 mm x 2.0 mm ± 0.1mm

Laser Damage Threshold: 1 J/cm² @ 532 nm

Clear Aperture: ≥85%

Transmitted Wavefront Error: < λ/4 RMS at λ = 633 nm

Beam Deviation: ≥ 10 arc seconds

Surface Quality: 40–20 scratch and dig

Orientation Coating: away from light as a polarizer. Coating towards light as an analyzer

Standard Products

Normal Laser Wavelength	Wavelength Range for AOI = 45°±0.5°	AOI Range for Normal Laser Wavelength	OD 2 Avg Polarization Blocking Range	OD 6 S-Pol Blocking Range	OD6 P-Pol Blocking Range	PART NUMBER
Semrock Polarization Bandpass Filters 45°						
405 nm	400 – 410 nm	41° – 51°	300 – 332 nm 490 – 1100 nm	320 – 516 nm	332 – 388 nm 422 – 490 nm	PBP-405.0-25x36M
532 nm	518 – 541 nm	38° – 52°	300 – 418 nm 664 – 1100 nm	400 – 695 nm	418 – 502 nm 557 – 664 nm	PBP-529.0-25x36M
640 nm	628.5 – 650 nm	40.5° – 51°	300 – 511 nm 795 – 1100 nm	488 – 840 nm	511 – 602 nm 675 – 795 nm	PBP-639.0-25x36M
1064 nm	1038 – 1081 nm	39° – 51°	300 – 851 nm 1307 – 1750 nm[1]	720 – 1393 nm	851 – 996 nm 1120 – 1307 nm	PBP-1059.0-25x36M

[1] OD 2.5 Average for PBP-1059-25x36M

Semrock

STOPLINE®
SINGLE NOTCH FILTERS

Semrock StopLine® single-notch filters offer high transmission over wide passbands. They offer deep laser-line blocking with OD > 6 for maximum laser rejection, and rejected light is reflected for best alignment and stray light control. Ideal for Raman spectroscopy, laser-based fluorescence instruments and biomedical laser systems.

- Notch Filters for Raman and fluorescence applications
- OD > 6 for maximum laser rejection
- High transmission outside the notch to detect the weakest signals
- Hard dielectric sputtered coatings for proven environmental stability and durability

Specifications

Product Code: NF

Laser Line Blocking: Optical Density > 6
50% Notch Bandwidth:

Typical: NBW=$55 \times 10^{-6} \times \lambda_c^2 + 14 \times 10^{-3} \times \lambda_c - 5.9$
[e.g.,17 nm (600cm^{-1}) for a 532.0 nm filter]

Maximum: <1.1xNBW

90% Notch Bandwidth Passband: <1.3xNBW

Average Transmission: >90%

Transmission Ripple: <2.5%

Angle of Incidence: 0.0°±5.0°

Angle Tuning Range*: –1.0 % of laser wavelength
(e.g., –5.3 nm or +190 cm^{-1} for a 532 nm filter)

Coating Technology: "Hard" ion-beam sputtered

Clear Aperture: ≥ 22 mm

Damage Threshold: 1 J/cm^2, 10 nsec, 20 Hz @ 532 nm

Optical Material:Fused silica with ultralow autofluorescence

Diameter: 25.0 mm +0/–0.1 mm

Thickness: 3.5mm ± 0.1 mm

Surface Quality: 60-40 scratch and dig

Mounting: Black-anodized aluminum ring

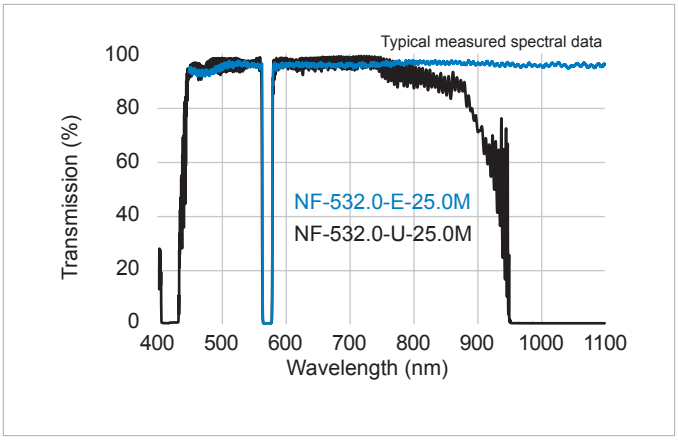

Semrock's new "E-grade" StopLine® notch filter offers ultrawide transmission up to 1600.0 nm. The renowned "U-grade" StopLine™ notch filter offers deep rejection for 532.0 nm as well as efficent rejection of the primary Nd:YAG wavelength.

IDEX OPTICS & PHOTONICS MARKETPLACE

Standard Products

λ_c (nm)	BLUE SHIFT Passband Range T_{avg} > 80% λ (nm)	BLUE SHIFT Passband Range T_{avg} > > 93% λ (nm)	RED SHIFT Passband Range T_{avg} > > 93% λ (nm)	Typical 50% Notch Bandwidth	Laser Line Blocking	PART NUMBER
Semrock StopLine® Single Notch Filters						
405.0	330.0 – 380.0	380.0 – 395.3	414.7 – 1600.0	9.0	OD > 6	NF-405.0-E-25.0M
488.0	350.0 – 400.0	400.0 – 472.6	503.4 – 1600.0	14.0	OD > 6	NF-488.0-E-25.0M
514.5	350.0 – 400.0	400.0 – 497.1	531.9 – 1600.0	16.0	OD > 6	NF-514.5-E-25.0M
532.0	—	399.0 – 513.2**	550.8 – 709.3**	17.0	OD > 6	NF-532.0-U-25.0M
532.0	350.0 – 400.0	400.0 – 513.2	550.8 – 1600.0	17.0	OD > 6	NF-532.0-E-25.0M
561.0	350.0 – 400.0	400.0 – 540.2	582.6 – 1600.0	19.0	OD > 6	NF-561.0-E-25.0M
594.0	350.0 – 400.0	400.0 – 570.1	618.1 – 1600.0	21.8	OD > 6	NF-594.0-E-25.0M
633.0	350.0 – 400.0	400.0 – 605.3	660.3 – 1600.0	25.0	OD > 6	NF-632.8-E-25.0M
658.0	350.0 – 400.0	400.0 – 628.2	687.8 – 1600.0	27.0	OD > 6	NF-658.0-E-25.0M
785.0	350.0 – 400.0	400.0 – 742.1	827.9 – 1600.0	39.0	OD > 6	NF-785.0-E-25.0M
808.0	350.0 – 400.0	400.0 – 762.5	853.5 – 1600.0	41.0	OD > 6	NF-808.0-E-25.0M

** Transmission for the NF-532.0-U-25.0M is > $90\%_{avg}$ over passband

Specifications

Product Code: CG

Optical Material: Schott optical glass

Size Options: ø 12.5 mm, ø 25.0 mm, ø 50.0 mm and ø 50.0 mm x 50.0 mm

Size Tolerance: +0.0/-0.20mm

Thickness Options: 1.0 mm, 2.0 mm, 2.5 mm, and 3.0 mm

Thickness Tolerance: ±0.20 mm

Clear Aperture: 90% of dimensions

Surface Quality: 60-40

Semi Custom

Use the selection menu below to build your own part

YOUR CUSTOM PART NUMBER	CG	—	UG-11	—	25.0M	—	2.0

PRODUCT CODE

CG

GLASS TYPE

see table

SIZE CODE	Dimensions
0.50	ø 12.7 mm
25.0 M	ø 25.0 mm
1.00	ø 25.4 mm

THICKNESS in mm

2.0
3.0

CVI Laser Optics

SCHOTT COLOR GLASS FILTERS

Standard Products

Schott Glass Type	Glass Color	Correction Factor
Longpass Color Glass Filters		
WG-280	colorless	0.920
GG-400	yellow	0.920
GG-420	yellow	0.920
GG-435	yellow	0.920
GG-455	yellow	0.920
GG-475	yellow	0.920
GG-495	yellow	0.920
OG-515	yellow	0.920
OG-530	yellow	0.920
OG-550	orange	0.920
OG-570	orange	0.920
OG-590	red	0.920
RG-610	red	0.920
RG-630	red	0.920
RG-645	red	0.920
RG-665	red	0.910
RG-695	black	0.910
RG-715	black	0.910
RG-9	black	0.920
RG-780	black	0.910
RG-830	black	0.910
RG-850	black	0.910
RG-1000	black	0.910
Heat Absorbing Color Glass Filters		
KG-2	colorless	0.920
KG-3	colorless	0.920
KG-5	colorless	0.920
Bandpass Color Glass Filter Types		
UG-1	dark violet-black	0.910
UG-5	dark violet	0.910
UG-11	dark red-black	0.910
BG-3	blue	0.910
BG-7	blue	0.910
BG-18	bright blue-green	0.910
BG-39	bright blue-green	0.910
BG-40	bright blue-green	0.910

IDEX OPTICS & PHOTONICS MARKETPLACE

HEAT-ABSORBING FILTERS

CVI Laser Optics heat-absorbing filters separate infrared radiation from visible radiation by absorption.

Spectral transmittance curves are supplied with each standard heat-absorbing filter. The accuracy of the measurement is ±2% of full scale. Transmittance curves for the tempered heat-absorbing filters are available by special request at time of purchase.

The two graphs show the transmittance of KG1, KG2, KG3, and KG4 Schott heat-absorbing glass types.

- The typical internal transmittance curves shown are for 3 mm thick filters and do not consider reflectance losses at the surface.
- Multiplying the correction factor by the internal transmittance curve yields an external transmittance curve that includes surface reflectance losses.

Specifications

Product Code: FCG

Dimensions:
Round: 25.0 +0/–0.15 mm
Square: 50.8x50.8 mm (±0.2 mm)

Thickness: 3.0±0.25 mm

Surface Quality: 80-50 scratch and dig

Maximum Service: 250°C (482°F). Irreversible temperature transmittance changes may occur at higher temperatures.

Parallelism: 3 arc minutes

Optical Material: Schott colored glass

Correction Factor: 0.92 for visible spectrum

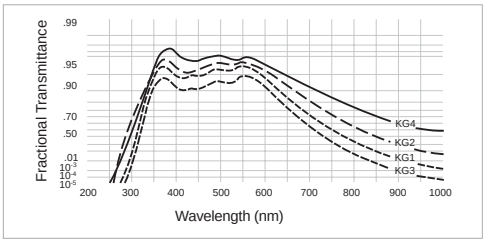

Typical internal transmittance curves in the visible range

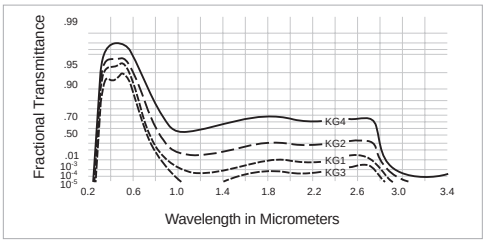

Typical internal transmittance curves in the infra-red range

Standard Products

Shape	Size (mm)	Schott Glass Type	Transmission Maximum	PART NUMBER
Standard Heat-Absorbing Filters				
Round	25.0	KG2	94% at 375 nm	CG-KG-2-25.0M-3
Round	25.0	KG3	92% at 375 nm	CG-KG-3-25.0M-3
Round	25.0	KG5	92% at 375 nm	CG-KG-5-25.0M-3
Square	50.8x50.8	KG2	94% at 375 nm	CG-KG-2-2X2-3.0
Square	50.8x50.8	KG3	92% at 375 nm	CG-KG-3-2X2-3.0
Square	50.8x50.8	KG5	92% at 375 nm	CG-KG-5-2X2-3.0

NEUTRAL DENSITY FILTERS

Neutral density (ND) filters attenuate, split, or combine beams in a wide range of irradiance ratios with no significant dependence on wavelength. These carefully prepared filters find wide application for precise attenuation or control of light. For example, beams can be attenuated to levels where photometers or radiometers are most accurate and linear, thereby extending their useful range.

All CVI Laser Optics ND filters pass stringent optical and mechanical tests. Individual ND filters and ND filter sets are in stock and ready to ship. Our applications engineers will be pleased to assist you in the selection and application of standard or custom filters. Optical density (D) is defined as the base 10 logarithm of the reciprocal of transmittance (T):

$D=\log(1/T)$, or $T=10^{-D}$

Optical density is analogous to the definition of decibel as used in electronics. ND filters used in combinations are additive if multiple reflections between filters do not occur in the direction of interest. The reciprocal of transmittance, $1/T$, is called opacity. Also in widespread use is relative optical density, D_r, the difference between density D of a coated substrate and density D_0 of an uncoated region of the same substrate:

$D_r = D - D_0$
or $D = D_r + D_0$.

$D_o = 2 \log (n + 1)^2 / 4n.$

In terms of refractive index n,

At 550 nm, D_0 is typically about 0.0376 for BK7, and about 0.0309 for synthetic fused silica. Relative density D_r, not absolute density D, is the quantity that appears on individual microdensitometer traces supplied with CVI Laser Optics circular variable filters, because many variable filter applications require focal plane position or plate aberration constancy. This requirement prohibits removal or perforation of the substrate to achieve D=0.0 accurately. In such instruments, performance is referenced to a blank, and density differences, not the densities themselves, are important.

Transmittance and density values may, like reflectance values, refer to either small angular fields (specular or undeviated values) or very large angular fields (diffuse or hemispherical values). The measurements that determine hemispherical values include both specular and scattered contributions. Density and relative density values for CVI Laser Optics ND filters are specular values based on external transmittance.

Because of Beer's and Fechner's laws (sensation proportional to logarithm of stimulus, applicable to vision as a special case), it has been historically convenient to use the logarithmic density scale, instead of a transmittance scale. While optical density is dimensionless, the notation 0.50 D is sometimes used to mean 0.50 density units, or simply a density of 0.50. Two or more ND filters can be used to achieve values of transmittance or density not otherwise available. If they are arranged so that multiple reflections between them do not occur in the direction of interest, transmittance values are multiplicative, whereas optical densities are additive. By combining various filters, many separate density values may be achieved.

CVI Laser Optics provides two types of ND filters: metallic (reflective) and glass (absorptive).

METALLIC NEUTRAL DENSITY FILTERS

All CVI Laser Optics metallic ND filters are made with N-BK7 fine annealed glass, or optical-quality synthetic fused silica.Vacuum deposition is used to apply a thin film of several special metallic alloys to the substrate. These alloys have been chosen to create a spectral-density curve that is flatter over a wider range than the curves of most pure metals. Substrate materials are chosen for homogeneity, transmittance uniformity, finishing characteristics, and (in the case of synthetic fused silica) ultraviolet transmittance.

Substrates are polished to minimize light scattering. Metallic ND filters can be used at any wavelength between 200 and 2500 nm (fused silica), or between 350 and 2500 nm (N-BK7).Their operation depends on absorption in, and reflection from, the thin metallic film.

When used in high-intensity beams,ND filters should be oriented with the metallic film facing toward the source to minimize substrate absorption and heating. Alloy films are corrosion resistant and do not age at normal temperatures.Adhesion of alloy films to their substrates is tenacious and unaffected by moisture and most solvents from -73°C (-100°F) to +150°C (302°F). Exposure to higher temperatures should be avoided because it causes film oxidation and increased transmittance. These filters are not suitable for use with high-power pulsed lasers.

ABSORPTIVE NEUTRAL DENSITY FILTERS

Absorptive ND filters provide an alternative to metallic ND filters. The neutrality of the filter is a function of material and thickness. Since there can be large variations between glass melts, actual thickness and glass material may vary in order to guarantee optical density. These filters are recommended for low-power applications only, because of their absorbing properties.

FILTER SET CONTENTS

Each individual filter is checked, and an optical density spectrophotometer curve from the coating run is included with each filter. Measured ranges are from 200 to 700 nm for sets on synthetic fused silica, and from 350 to 700 nm for sets on N-BK7 substrates. Individual spectrophotometer curves are available on special request.

Some sets include a blank (uncoated) substrate of the same material and thickness used for the filters. This blank is often very helpful for aligning and focusing optical systems before inserting the ND filter.

Each ND filter set is packaged in a wooden case.

CVI Laser Optics

ABSORPTIVE NEUTRAL DENSITY FILTERS

Absorptive ND filters provide an alternative to metallic ND filters. The absorptivity of the filter is a function of material and thickness. Since there can be large variations between glass melts, actual thickness and glass material may vary in order to guarantee optical density.

- Light is absorbed rather than reflected
- No back reflections or scattering occur
- These filters are recommended for low-power applications because of their absorbing properties

Specifications

Product Code: ANG

Optical Material: Schott optical glass or equivalent

Optical Density: Nominal at 546 nm

Thickness: 0.5 mm to 4.0 mm, depending on optical density

Surface Finish: ≤3 arc minutes

Surface Quality: 80-50 scratch and dig

Clear Aperture: 90% of central dimension

Standard Products

Nominal Density at 546 nm	Transmission (%)	Optical Material	PART NUMBER			
			⌀ 25.0	⌀ 25.4	☐ 50.0 x 50.0	☐ 50.8 x 50.8
Absorptive Neutral Density Filters						
0.10	79.43	NG 11	ANG-10-25.0M	ANG-10-1.00	ANG-10-50.0X50.0M	ANG-10-2X2
0.20	63.10	NG 11	ANG-20-25.0M	ANG-20-1.00	ANG-20-50.0X50.0M	ANG-20-2X2
0.30	50.12	NG 11	ANG-30-25.0M	ANG-30-1.00	ANG-30-50.0X50.0M	ANG-30-2X2
0.50	31.62	NG 5	ANG-50-25.0M	ANG-50-1.00	ANG-50-50.0X50.0M	ANG-50-2X2
0.60	25.12	NG 5	ANG-60-25.0M	ANG-60-1.00	ANG-60-50.0X50.0M	ANG-60-2X2
0.80	15.85	NG 5	ANG-80-25.0M	ANG-80-1.00	ANG-80-50.0X50.0M	ANG-80-2X2
0.90	12.59	NG 4	ANG-90-25.0M	ANG-90-1.00	ANG-90-50.0X50.0M	ANG-90-2X2
1.00	10.00	NG4 or NG 3	ANG-100-25.0M	ANG-100-1.00	ANG-100-50.0X50.0M	ANG-100-2X2
1.50	3.16	NG 3	ANG-150-25.0M	ANG-150-1.00	ANG-150-50.0X50.0M	ANG-150-2X2
2.00	1.00	NG 3	ANG-200-25.0M	ANG-200-1.00	ANG-200-50.0X50.0M	ANG-200-2X2
3.00	0.10	NG 3	ANG-300-25.0M	ANG-300-1.00	ANG-300-50.0X50.0M	ANG-300-2X2
4.00	0.01	NG 9 or NG 1	ANG-400-25.0M	ANG-400-1.00	ANG-400-50.0X50.0M	ANG-400-2X2

IDEX OPTICS & PHOTONICS MARKETPLACE

CVI Laser Optics

ABSORPTIVE NEUTRAL DENSITY FILTER SETS

CVI Laser Optics offers twelve absorptive ND filter sets to provide the greatest flexablity in size and variable optical density options needed for your application.

- Multiple filters can be stacked to vary density
- Filters should be loosely mounted to avoid external stress
- These sets are recommended for low-power applications because of the filters' absorbing properties
- Custom options are available; contact CVI Laser Optics for more information

Specifications

Product Code: ANGS • FSA

Optical Material: Schott optical glass or equivalent

Optical Density: Nominal at 546 nm

Thickness: 0.5 mm to 4.0 mm, depending on optical density

Surface Finish: ≤3 arc minutes

Surface Quality: 60-40 scratch and dig

Clear Aperture: 90% of central dimension

Standard Products

Number of Elements	Included Densities	Size (mm)	Shape	PART NUMBER
Absorptive Neutral-Density Filter Sets				
5	0.3, 0.5, 1.0, 2.0, 3.0	⌀25	Round	FSA-25.0M
5	0.3, 0.5, 1.0, 2.0, 3.0	□ 50.8x50.8	Square	FSA-2X2
8	0.1, 0.2, 0.4, 0.6, 0.8, 1.0, 2.0, 4.0	⌀25.0	Round	ANGS-25.0M
8	0.1, 0.2, 0.4, 0.6, 0.8, 1.0, 2.0, 4.0	⌀25.4	Round	ANGS-1.00
8	0.1, 0.2, 0.4, 0.6, 0.8, 1.0, 2.0, 4.0	□ 50.8x50.8	Square	ANGS-2X2

Specifications

Product Code: ND • NDQ

Dimension Tolerance: ±0.2 mm

Thickness: 2.0 ± 0.2 mm

Surface Quality: 80-50 scratch and dig

Surface Flatness: <3λ per 25 mm area

Density Tolerance: 85% of optical density at 546 nm

Accuracy of Spectrophotometer Curves: Between 200 nm and 700 nm ±1% of full scale

Parallelism: 3 arc minutes

METALLIC NEUTRAL DENSITY FILTERS

CVI Laser Optics metallic ND filters attenuate light through a combination of reflection and absorption. The alloy Inconel® creates a spectral-density curve that is flatter over a wider range than the curves of most pure metals and therefore allows the relative spectral distribution to be maintained. Filters are available in crown glass or fused silica for applications in the ultraviolet.

- Uniform light attenuation over a broad spectrum
- Operational temperture range: -73°C to +150°C
- Typical Laser Damage Threshold ≤25 Watts/cm²
- Ideal for wide aperture applications

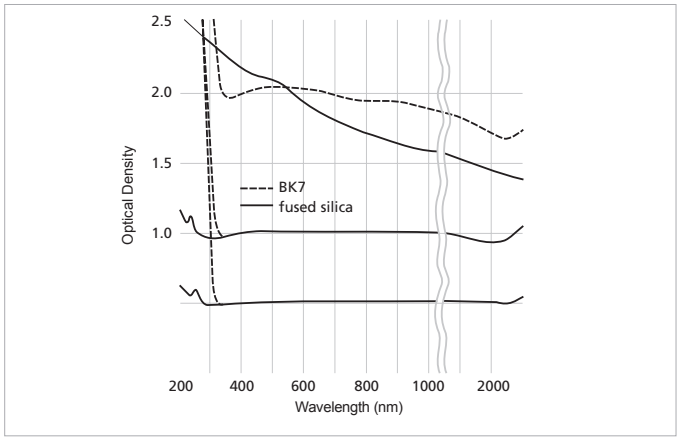

Typical density curves

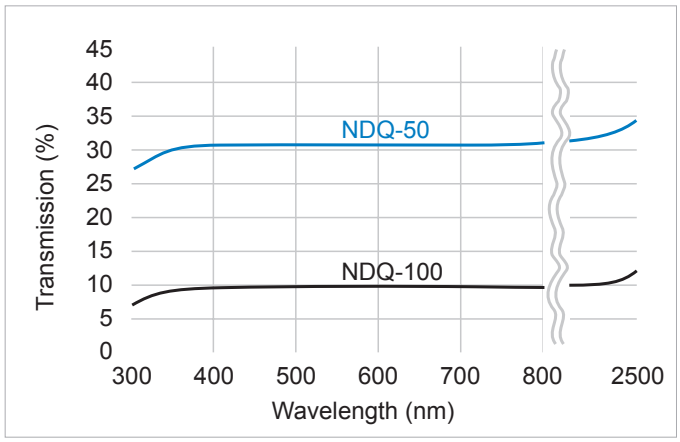

Transmission vs. wavelength for NDQ-50 and NDQ-100 metallic neutral density filters

OPTICS & PHOTONICS MARKETPLACE

Standard Products

Nominal Density at 546 nm	Transmission (%)	PART NUMBER (mm)			
		⌀ 25.0	ø 25.4	☐ 50.0 x 50.0	☐ 50.8 x 50.8
Metallic Neutral-Density Filters, N-BK7					
0.10	79.43	ND-10-25.0M	ND-10-1.00	ND-10-50.0X50.0M	ND-10-2X2
0.20	63.10	ND-20-25.0M	ND-20-1.00	ND-20-50.0X50.0M	ND-20-2X2
0.30	50.12	ND-30-25.0M	ND-30-1.00	ND-30-50.0X50.0M	ND-30-2X2
0.40	39.81	ND-40-25.0M	ND-40-1.00	ND-40-50.0X50.0M	ND-40-2X2
0.50	31.62	ND-50-25.0M	ND-50-1.00	ND-50-50.0X50.0M	ND-50-2X2
0.60	25.12	ND-60-25.0M	ND-60-1.00	ND-60-50.0X50.0M	ND-60-2X2
0.70	19.95	ND-70-25.0M	ND-70-1.00	ND-70-50.0X50.0M	ND-70-2X2
0.80	15.85	ND-80-25.0M	ND-80-1.00	ND-80-50.0X50.0M	ND-80-2X2
0.90	12.59	ND-90-25.0M	ND-90-1.00	ND-90-50.0X50.0M	ND-90-2X2
1.00	10.00	ND-100-25.0M	ND-100-1.00	ND-100-50.0X50.0M	ND-100-2X2
1.50	3.16	ND-150-25.0M	ND-150-1.00	ND-150-50.0X50.0M	ND-150-2X2
2.00	1.00	ND-200-25.0M	ND-200-1.00	ND-200-50.0X50.0M	ND-200-2X2
3.00	0.10	ND-300-25.0M	ND-300-1.00	ND-300-50.0X50.0M	ND-300-2X2
4.00	0.01	ND-400-25.0M	ND-400-1.00	ND-400-50.0X50.0M	ND-400-2X2
Metallic Neutral Density Filters, Fused Silica					
0.10	79.43	NDQ-10-25.0M	NDQ-10-1.00	NDQ-10-50.0X50.0M	NDQ-10-2X2
0.20	63.10	NDQ-20-25.0M	NDQ-20-1.00	NDQ-20-50.0X50.0M	NDQ-20-2X2
0.30	50.12	NDQ-30-25.0M	NDQ-30-1.00	NDQ-30-50.0X50.0M	NDQ-30-2X2
0.40	39.81	NDQ-40-25.0M	NDQ-40-1.00	NDQ-40-50.0X50.0M	NDQ-40-2X2
0.50	31.62	NDQ-50-25.0M	NDQ-50-1.00	NDQ-50-50.0X50.0M	NDQ-50-2X2
0.60	25.12	NDQ-60-25.0M	NDQ-60-1.00	NDQ-60-50.0X50.0M	NDQ-60-2X2
0.70	19.95	NDQ-70-25.0M	NDQ-70-1.00	NDQ-70-50.0X50.0M	NDQ-70-2X2
0.80	15.85	NDQ-80-25.0M	NDQ-80-1.00	NDQ-80-50.0X50.0M	NDQ-80-2X2
0.90	12.59	NDQ-90-25.0M	NDQ-90-1.00	NDQ-90-50.0X50.0M	NDQ-90-2X2
1.00	10.00	NDQ-100-25.0M	NDQ-100-1.00	NDQ-100-50.0X50.0M	NDQ-100-2X2
1.50	3.16	NDQ-150-25.0M	NDQ-150-1.00	NDQ-150-50.0X50.0M	NDQ-150-2X2
2.00	1.00	NDQ-200-25.0M	NDQ-200-1.00	NDQ-200-50.0X50.0M	NDQ-200-2X2
3.00	0.10	NDQ-300-25.0M	NDQ-300-1.00	NDQ-300-50.0X50.0M	NDQ-300-2X2
4.00	0.01	NDQ-400-25.0M	NDQ-400-1.00	NDQ-400-50.0X50.0M	NDQ-400-2X2

Semi Custom Use the selection menu below to build your own part

YOUR CUSTOM PART NUMBER NDQ — 100 — 50.0 X 50.0 M

PRODUCT CODE	Substrate Material
ND	N-BK7
NDQ	fused silica

OPTICAL DENSITY CODE	Optical Density
10	0.10
20	0.20
30	0.30
40	0.40
50	0.50
60	0.60
70	0.70
80	0.80
90	0.90
100	1.00
150	1.50
200	2.00
250	2.50
300	3.00
400	4.00

SIZE CODE	SIZE
0.50	12.7mm
25.0 M	25.0mm
1.00	25.4mm
50.0 X 50.0 M	50.0mm x 50.0mm
2X2	50.8mm x 50.8mm

IDEX OPTICS & PHOTONICS MARKETPLACE

CVI Laser Optics

METALLIC NEUTRAL DENSITY FILTER SETS

- CVI Laser Optics offers a selection of metallic ND filter sets to provide a broad range of filter options.
- Filters include individual density curves and wooden storage box

Specifications

Product Code: FSG • FSQ • NDS • NDQS

Optical Material: Fused Silica or BK7

Optical Density Tolerance: 85% of OD at 550 nm for density ≤1.0, ± 0.02 density for density >1.0

Thickness: 2.0 ± 0.2 mm

Surface Finish: ≤3λ per 25 mm area

Surface Quality: 80-50 scratch and dig

Standard Products

Size (mm)	Number of Elements	Included Densities (@ 550 nm)	PART NUMBER
Metallic Neutral Density, Filter Sets			
⌀ 25	7	0.04*, 0.1, 0.3, 0.5, 1.0, 2.0, 3.0	FSG-25.0M
□ 50 x 50	7	0.04*, 0.1, 0.3, 0.5, 1.0, 2.0, 3.0	FSG-25.0M
⌀ 25.4	10	0.1, 0.2, 0.3, 0.4, 0.5, 0.6, 0.7, 0.8, 0.9 and 1.0	NDS-1.00
□ 50.8 x 50.8	10	0.1, 0.2, 0.3, 0.4, 0.5, 0.6, 0.7, 0.8, 0.9 and 1.0	NDS-2X2
Metallic Neutral Density Filters, Fused Silica			
⌀ 25.0	7	0.03*, 0.1, 0.3, 0.5, 1.0, 2.0, 3.0	FSQ-25.0M
□ 50.0 x 50	7	0.03*, 0.1, 0.3, 0.5, 1.0, 2.0, 3.0	FSQ-50.0X50.0M
⌀ 25.4	10	0.1, 0.2, 0.3, 0.4, 0.5, 0.6, 0.7, 0.8, 0.9 and 1.0	NDQS-1.00
□ 50.8 x 50.8	10	0.1, 0.2, 0.3, 0.4, 0.5, 0.6, 0.7, 0.8, 0.9 and 1.0	NDQS-2X2

* This includes a blank substrate of N-BK7 (D0=0.0376) or fused silica (D0=0.0309), as appropriate.

High-energy attenuators are designed for transmissive applications where nonabsorbing coating and substrate materials are required. Transmitted wavefront distortion is less than λ/4 over central 6 mm diameter. These are intended for use at zero degree incident angle.

Warning: reflected energy from uncoated surfaces may cause injury.

- All dielectric, nonabsorbing attenuators, T+R = 1
- Designed for transmissive applications
- High-energy attenuator kits available, call CVI Laser Optics

Specifications

Product Code: UVDA

Coating Technology: Electron-beam multilayer dielectric

Transmitted:
Transmitted: λ/4 at 633 nm
Wavefront Error: over central 6 mm) ø
Reflected: Not specified

Adhesion and Durability: Per MIL-C-675C. Insoluble in lab solvents.

Angle of Incidence: 0° ± 10°

Damage Threshold: 2 J/cm², 20 nsec, 20 Hz @ 355 nm

Optical Material: UV-grade fused silica

Thickness: 200±50 µm

Housing: Black-anodized aluminum

HIGH ENERGY DIELECTRIC UV ATTENUATORS

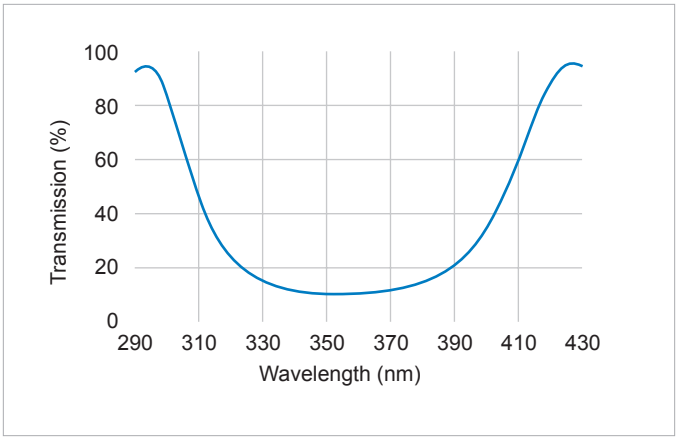

UVDA-355-1.00-10

Semi Custom

Use the selection menu below to build your own part

YOUR CUSTOM PART NUMBER UVDA — 248 — 1.30 — 20

PRODUCT CODE

UVDA

CENTER WAVELENGTH nm

248	266	308	355

OPTICAL DENSITY

0.10	0.50	2.00
0.30	1.00	2.50

SIZE CODE	Housing Diameter	Housing Thickness	Clear Aperture
10	25.4 mm	3.2 mm	15.0 mm

CVI Laser Optics

HIGH ENERGY DIELECTIC ATTENUATORS

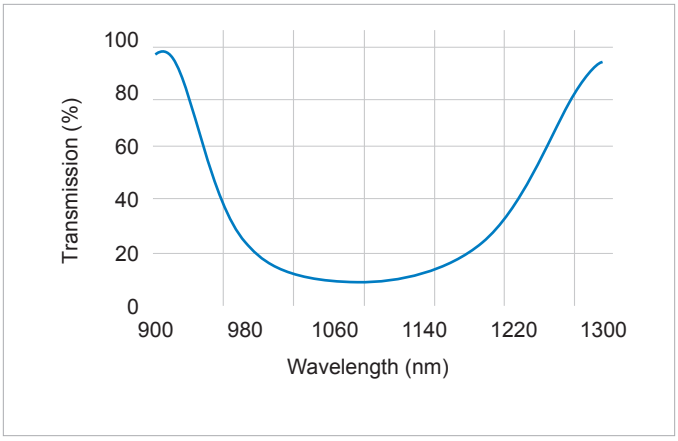

HPDA-1064-1.00-20

High-energy attenuators are designed for transmissive applications where nonabsorbing coating and substrate materials are required. Transmitted wavefront distortion is less than λ/4 over central 6 mm diameter. These are intended for use at zero degrees incident angle.

Warning: Reflected energy from uncoated surfaces may cause injury.

- All dielectric, nonabsorbing attenuators, T+R= 1
- Designed for transmissive applications
- High-energy attenuator kits available, call CVI Laser Optics

Specifications

Product Code: HPDA

Coating Technology: Electron-beam multilayer dielectric

Transmitted: λ/4 at 633 nm

Wavefront Error: over central 6 mm) ø
Reflected: Not specified

Adhesion and Durability: Per MIL-C-675C. Insoluble in lab solvents.

Angle of Incidence: 0°±10°

Damage Threshold: 20 J/cm², 20 nsec, 20 Hz @ 1064 nm

Optical Material: N-BK7 glass

Thickness: 200±50 µm

Housing: Black-anodized aluminum

Semi Custom

Use the selection menu below to build your own part

YOUR CUSTOM PART NUMBER HPDA — 1064 — 1.00 — 10

PRODUCT CODE

HPDA

CENTER WAVELENGTH nm

532	800	1064

OPTICAL DENSITY

0.10	0.50	2.00
0.30	1.00	2.50

SIZE CODE	Housing Diameter	Housing Thickness	Clear Aperture
10	25.4 mm	3.2 mm	15.0 mm

CVI Laser Optics

UV-VISIBLE SPECTROPHOTOMETER CALIBRATION FILTERS

UV-Visible spectrophotometer calibration filter sets are designed as secondary spectrophotometer calibration standards for ultraviolet and visible wavelengths.

The set consists of three metallic-coated neutral-density filters, a holmium oxide filter, a blank filter holder, and a hardwood case. The filters are mounted in a cuvette-sized holder made of a non-metallic material to protect filters from damage.

Nominal neutral density filter transmittance values are 10%, 30%, and 80%. Each filter is individually calibrated for transmittance at 250.0 nm, 280.0 nm, 340.0 nm, 360.0 nm, 400.0 nm, 465.0 nm, 500.0 nm, 546.1 nm, and 635.0 nm.

Spectrophotometer calibration filters are primarily used to calibrate various transmittance values and are derived from the National Institute of Standards and Technology (SRM 2031, 2034, etc.). Uncertainty of the transmittance values is ±1.0%. The calibration will not vary more than ±1.0% over a period of one year.

The holmium oxide filter has distinctive transmittance valleys between 279.3 nm and 637.5 nm. This filter is especially useful for wavelength calibration of spectrophotometers.

Specifications

Product Code: CF-UVV

Transmittance Values: 10%, 30%, 80%

Calibration wavelengths: 250.0, 280.0, 340.0, 360.0, 400.0, 465.0, 500.0, 546.1, and 635.0 nm

Standard Product

Description	PART NUMBER
UV-Visible Spectrophotometer Calibration Filters	
UV-VIS spectrophotometer calibration set	CFS-UVV-1.00
Calibration Set includes	
0.1 optical density filter (79.4% T)	
0.5 optical density filter (31.6% T)	
1.0 optical density (10.0% T)	
1.0 optical density filter (10.0% T)	
Holmium oxide filter	
Blank filter holder	
Hardwood filter case	

IDEX OPTICS & PHOTONICS MARKETPLACE

CVI Laser Optics

VISIBLE SPECTROPHOTOMETER CALIBRATION FILTERS

Visible spectrophotometer calibration filter sets are designed as secondary spectrophotometer calibration standards for visible wavelengths.

The set consists of four metallic-coated neutral-density filters, a holmium oxide filter, a blank filter holder, and a hardwood case. The filters are mounted in a cuvette-sized holder made of a nonmetallic material to protect filters from damage.

Nominal neutral density filter transmittance values are 10%, 30%, 50%, and 80%. Each filter is individually calibrated for transmittance at 440.0 nm, 465.0 nm, 546.1 nm, 590.0 nm, and 635.0 nm.

Spectrophotometer calibration filters are primarily used to calibrate various transmittance values and are derived from the National Institute of Standards and Technology (SRM 2031, 2034, etc.). Uncertainty of the transmittance values is within ±1.0%.The calibration will not vary more than ±1.0% over the peroid of one year and may be recalibrated at that time.

The holmium oxide filter has distinctive transmittance valleys between 279.3 nm and 637.5 nm. This filter is especially useful for wavelength calibration of spectrophotometers.

Specifications

Product Code: CF-VIS

Transmittance Values: 10%, 30%, 50%, 80%

Calibration wavelengths: 440.0, 465.0, 546.1, 590.0, and 635.0 nm

Standard Product

Description	PART NUMBER
Visible Spectrophotometer Calibration Filters	
VIS spectrophotometer calibration set	CFS-VIS-1.00
Calibration Set includes	
0.1 optical density filter (79.4% T)	
0.5 optical density filter (31.6% T)	
1.0 optical density (10.0% T)	
1.0 optical density filter (10.0% T)	
Holmium oxide filter	
Blank filter holder	
Hardwood filter case	

SOLID ETALONS

Specify any center wavelength from 190 – 2100 nm and the reflectivity required to achieve the desired finesse. The spectral bandwidth and variation in reflectance over that bandwidth will depend on a number of factors including center wavelength and exact coating design. Custom etalons on in-stock substrates are available with a two-week delivery time.

Specifications

Product Code: ET

Optical Material: UV-grade fused silica

Surface Quality:10-5 scratch and dig

Diameter: 25.4+0/–0.25 mm

Wedge: ≤1 arc sec

Chamfer: 0.35 mm at 45° (typical)

Coating Technology: Electron-beam multilayer dielectric

Adhesion and Durability: Per MIL-C-675C. Insoluble in lab solvents.

Reflectance: User specified

Center Wavelength: User specified

Transmitted Wavefront Error: λ/10 at 633 nm

Clear Aperture: ≥21.5 mm

Damage Threshold:
Pulsed: 10 J/cm^2, 20 nsec, 20 Hz @ 1064 nm
cw: 1 MW/cm^2 @ 1064 nm

Step 1 - Choose your substrate

t (mm)	FSR at 600 nm (cm^{-1})	Substrate
0.25	13.4	ET-25.4-0.25-UV
0.30	11.2	ET-25.4-0.30-UV
0.50	6.7	ET-25.4-0.50-UV
0.70	4.8	ET-25.4-0.70-UV
1.00	3.4	ET-25.4-1.00-UV
1.50	2.2	ET-25.4-1.50-UV
2.00	1.7	ET-25.4-2.00-UV
3.00	1.1	ET-25.4-3.00-UV
4.00	0.84	ET-25.4-4.00-UV
5.00	0.67	ET-25.4-5.00-UV
6.00	0.56	ET-25.4-6.00-UV
7.00	0.48	ET-25.4-7.00-UV
8.00	0.42	ET-25.4-8.00-UV
10.00	0.34	ET-25.4-10.00-UV
10.50	0.32	ET-25.4-10.50-UV
15.00	0.22	ET-25.4-15.00-UV

Semi Custom Use the selection menu below to build your own part

YOUR CUSTOM PART NUMBER ET — 25.4-1.00-UV — 1064 — 80

PRODUCT CODE

ET

SUBSTRATE PART NUMBER

(from table)

CENTER WAVELENGTH (nm)

193	248	308
488/515	532	1047
1064	1550	

REFLECTANCE (%)

30	40	60
74	82	86
90	93	95

ROTOR DRIVE SHUTTERS

Melles Griot rotor drive shutters incorporate a new generation of actuator technology for applications that require a small space envelope and unprecedented reliability, even under severe operating conditions. Our actuator technology has a design life of several million cycles, and its open architecture is easily configurable for custom packages and requirements.

These shutters are easily customizable for new and existing applications. They are extremely lightweight with few moving parts, and consume power only while moving the blades.

SELECTION GUIDE 264
FLAG SHUTTERS 265
PADDLE SHUTTERS 266
RDS SHUTTERS 267
SAFECLOSE SHUTTERS 269
ROTARY DRIVE INTEGRATED CONTROLLER SHUTTERS 270

SELECTION GUIDE

Product Type	Actuator Type	Unpowered State	Operating Temperature	Controller	Blade Coating	Applications	Page
FLAG SHUTTERS	Proprietary Rotor Drive	Bi-stable	-40°C to + 70°C	04 RSC 450 or similar	Flat black, high IR emissivity	Night vision, thermography, imaging, lab/research	265
PADDLE SHUTTERS	Proprietary Rotor Drive	Bi-stable	-40°C to + 70°C	04 RSC 450 or similar	Flat black, high IR emissivity	Night vision, thermography, imaging, lab/research	266
RDS SHUTTERS	Proprietary Rotor Drive	Bi-stable	-40°C to + 70°C	04 RSC 450 or similar	Flat black, high IR emissivity	Night vision, thermography, imaging, lab/research	267
SAFECLOSE SHUTTERS	Proprietary Rotor Drive	Normally Closed	-40°C to + 70°C	Not required	High LDT	Laser safety, instrumentation, lab/ research	269
ROTARY DRIVE INTEGRATED CONTROLLER SHUTTERS	Proprietary Rotor Drive	Bi-stable	-40°C to + 70°C	Not required, accepts TTL input	Flat black, high IR emissivity	Night vision, thermography, imaging, lab/research	270

IDEX OPTICS & PHOTONICS MARKETPLACE

MELLES GRIOT

FLAG SHUTTERS

Melles Griot Rotor Drive flag shutters are the ideal, economical solution for compact, portable applications. They are available in both single- and multi-blade formats to meet vertical fit design space requirements. They are often used in portable hand held thermal cameras and devices for first responder, inspection, and surveillance applications. Designed to withstand extreme temperature conditions, these shutters resist shock and vibration, and can operate reliably for several million cycles. The shutters accept onboard battery-powered integrated drive circuitry.

- Easily customized for new and existing configurations
- Designed for extreme temperature conditions (-40°C to +70°C)
- Consume power only while moving the blades (bi-stable)
- Extremely lightweight with few moving parts
- Sized for security & surveillance cameras, 17 micron pixels, 320 x 240 to 640 x 480 CCD

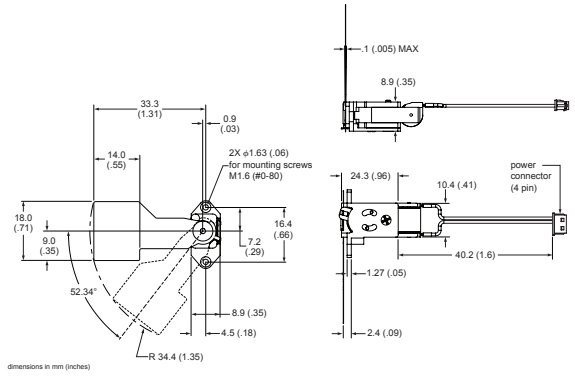

04 RDS 5x1 Flag Shutter Drawing

Standard Products

Aperture (mm)	Drive Voltage[1] (Vdc)	Actuation Speed[2] (msec)	Number of Blades	PART NUMBER
Flag Shutters (No holding current required)				
19 x 15	9	20	1	04 RDS 501
19 x 15	3	20	1	04 RDS 531
19 x 15	6	20	1	04 RDS 561

[1] Nominal @ 20°C
[2] Typical, excluding bounce settling time (10 - 40 msec depending on the pulse drive power and wave form)

MELLES GRIOT

PADDLE SHUTTERS

Melles Griot rotor drive paddle shutters are the ideal, economical solution for compact, portable applications. They are available in both single- and multi-blade formats to meet horizontal fit design space requirements. They are often used in cameras and devices for transportation and field portable applications. Designed to withstand extreme temperature conditions, these shutters resist shock and vibration, and can operate reliably for several million cycles. The shutters accept onboard battery-powered integrated drive circuitry.

- Easily customized for new and existing configurations
- Designed for extreme temperature conditions (-40°C to +70°C)
- Consume power only while moving the blades (bi-stable)
- Extremely lightweight with few moving parts
- The suspended-blades' shape and coatings are optimized for visible and IR imaging

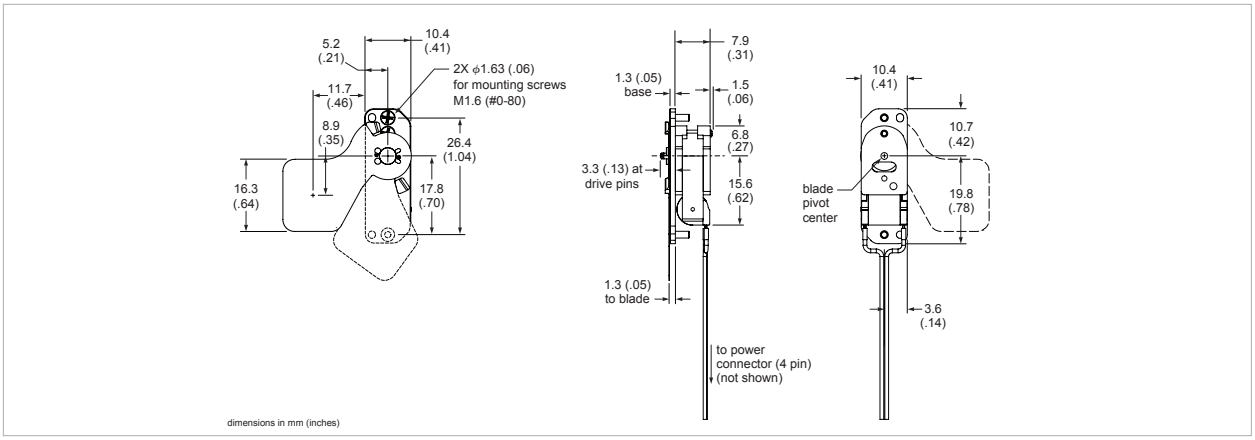

04 RDS 7x1 Paddle Shutter Drawing

Standard Products

Aperture (mm)	Drive Voltage[1] (Vdc)	Actuation Speed[2] (msec)	Number of Blades	PART NUMBER
Paddle Shutters (No holding current required)				
15.3 x 12.6	9	20	1	04 RDS 701
15.3 x 12.6	3	20	1	04 RDS 731
15.3 x 12.6	6	20	1	04 RDS 761

[1] Nominal @ 20°C
[2] Typical, excluding bounce settling time (10 - 40 msec depending on the pulse drive power and wave form)

IDEX OPTICS & PHOTONICS MARKETPLACE

MELLES GRIOT

RDS SHUTTERS

Melles Griot rotor drive iris shutters are excellent for small-space applications. They are available in both single- and multi-blade formats to meet compact design space requirements. They are often used in night vision, thermography, IR imaging, and laboratory research applications. Designed to withstand extreme temperature conditions, these shutters resist shock and vibration, and can operate reliably for several million cycles. The shutters accept onboard battery-powered integrated drive circuitry.

- Easily customized for new and existing configurations
- Designed for extreme temperature conditions (-40°C to +70°C)
- Consume power only while moving the blades (bi-stable)
- Extremely lightweight with few moving parts
- High torque robust actuators

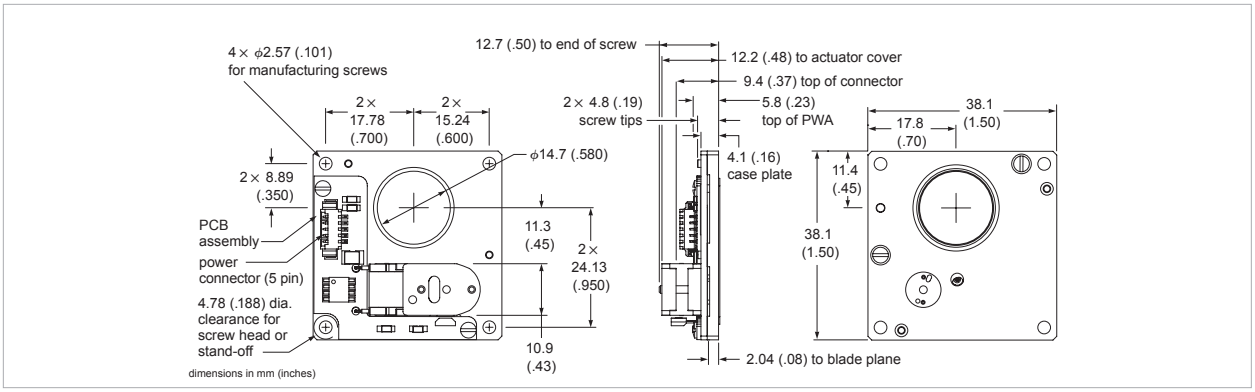

04 RDS 0x1 Rotor Drive Shutter Drawing

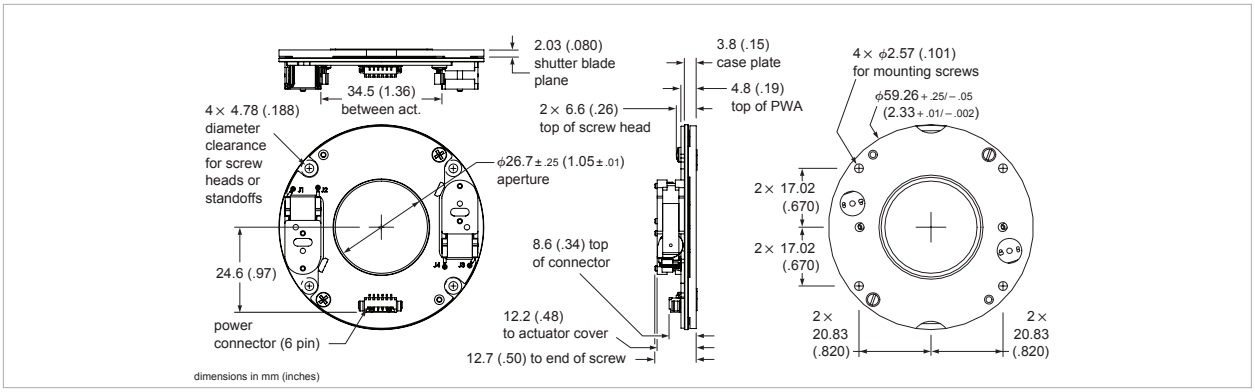

04 RDS 0x2 Rotor Drive Shutter Drawing

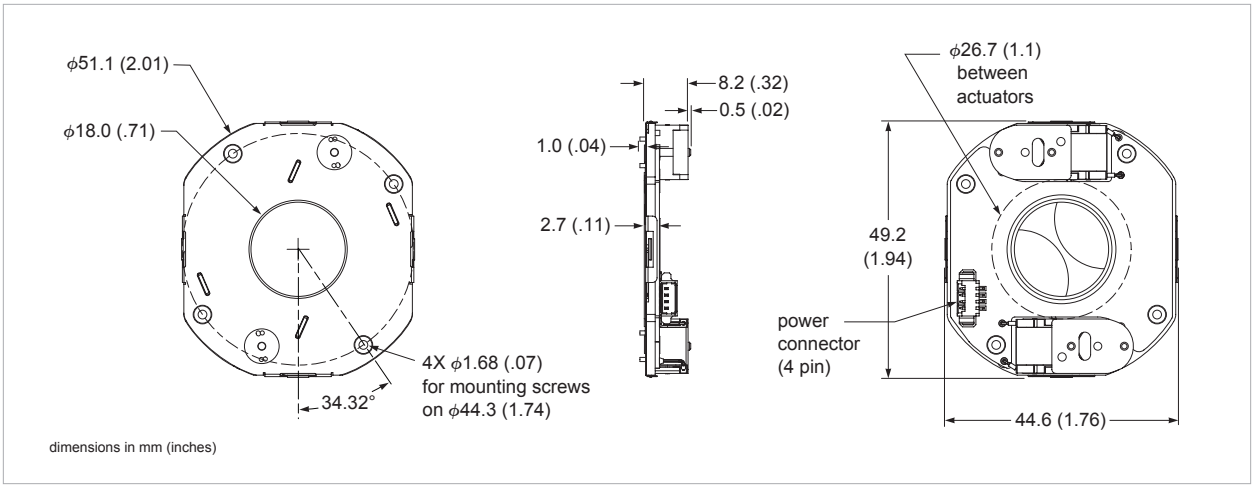

04 RDS 3x2 Rotor Drive Shutter Drawing

Standard Products

Aperture (mm)	Required Drive Current (mA)	Drive Voltage[3] (Vdc)	Actuation Speed[4] (msec)	Number of Blades	PART NUMBER
Rotor Drive Shutters (No holding current required)					
ø14.7	±225	9	20	1	04 RDS 001
ø18	±450[1]/±225[2]	9[1]/18[2]	20	2	04 RDS 302
ø18	±660[1]/±330[2]	3[1]/6[2]	20	2	04 RDS 332
ø26.7	±450[1]/±225[2]	9[1]/18[2]	20	2	04 RDS 002
ø26.7	±660[1]/±330[2]	3[1]/6[2]	20	2	04 RDS 032
ø35	±280[1]/±140[2]	5.6[1]/11.2[2]	35	4	04 RDS 004
ø45	±1120[1]	9[1]	25	5	04 RDS 205
ø58	±1120[1]	9[1]	30	5	04 RDS 005

[1] For a parallel-wired shutter
[2] For a series-wired shutter
[3] Nominal @ 20°C
[4] Typical, excluding bounce settling time (10 - 40 msec depending on the pulse drive power and wave form)

IDEX OPTICS & PHOTONICS MARKETPLACE

MELLES GRIOT

SAFECLOSE SHUTTERS

Melles Griot SafeClose™ laser shutters are based on proven rotor drive actuation technology with automatic closing on power down operation. This innovative design means there's no need for a separate controller just a 9V power signal is required to actuate the shutter and hold it open indefinitely. The blade will close upon signal removal. The shutters can withstand harsh environmental conditions, including wide temperature variations, high shock, and vibration in a clean environment. They are used in applications like analytical instrumentation, laser safety, and research.

- Multimillion cycle life
- Fail-safe magnetic return
- No separate controller required
- High shock and vibration resistance
- Reliable operation from -40°C to +70°C
- High LDT blade coating

Specifications

Controller: No separate controller required

Construction: Fail-safe magnetic return

Durability: Multimillion cycle life

Power handling: High LDT blade coating

Operating Temperature: Reliable operation from -40°C to +70°C

Performance/Reliability: High shock and vibration resistance

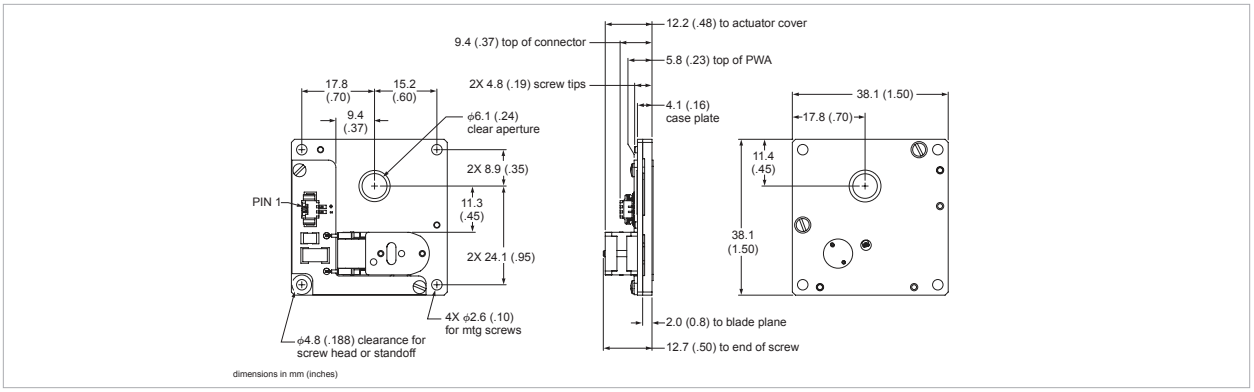

04 LSC 001 SafeClose Laser Shutter Drawing

Standard Products

Aperture (mm)	Configuration	Actuation Voltage (Vdc)	Peak Current[1] (mA)	Open/Close Speed[2] (msec)	Electrical Reset Time[3] (msec)	Maximum Repetition Rate (Hz)	Number of Blades	PART NUMBER
SafeClose Laser Shutters								
6	Normally Closed	9	225	15	80	10	1	04 LSC 001

[1] Current drops from 225 to 70 mA in 10 msec on open
[2] Typical transition time to full blade rest
[3] After close electrical drive circuit must reset

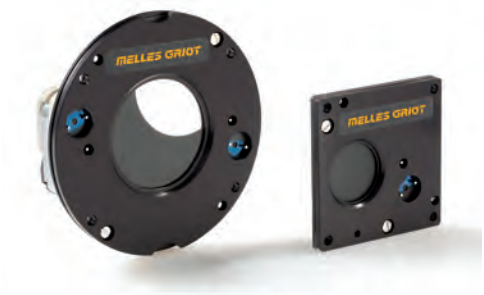

MELLES GRIOT

ROTARY DRIVE INTEGRATED CONTROLLER SHUTTERS

These shutters offer the same capabilities and performance characteristics as our regular rotor drive shutters, with an integrated controller built-in to enable rapid integration into your application with minimal investment. We ensure that the controller is properly integrated, eliminating shutter malfunctions that can occur from an incorrect actuation signal. Our actuator technology has a design life of several million cycles, and its open architecture is easily configurable for custom packages and requirements. Shutters are available in both single- and multi-blade formats. They are often used in night vision, thermography, IR imaging, and laboratory research applications.

- Accept state-controlling TTL input directly
- Can be powered by AA batteries
- Non-optical sensors provide indication of the shutter closed state via a separate TTL signal

Specifications

Actuation Type: TTL, separate channels for "Open" and "Close" signals

Actuation Signal:
Open: High (>3V)
Close: High (>3V)

Actuation Pulse Time: 60 msec

Actuation Rate Continuous: 4 Hz Maximum

Minimum Time Between Actuations[1]: 125 msec

State Sensing Signal:
Open: Low (<0.5V)
Close: High (>4.5V)

Standard Products

Clear Aperture (mm)	Supply Voltage (Vdc)	Supply Quiescent Current (mA)[2]	Supply Current During Actuation (mA)	Actuation Speed (msec)[3]	Connector	Number of Blades	PART NUMBER
Shutters with Integrated Controller							
14.7	4.4 – 8.0	2 Max	500 Max	20	Molex 5 pin, part number 53261-0571	1	04 RDI 231
26.7	4.8 – 9.0	11 Max	750 Max	20	Molex 5 pin, part number 53261-0571	1	04 RDI 232

[1] Limit: one cycle per second
[2] At Supply Voltage = 5.0V
[3] Typical, excluding bounce settling time (10 - 40 msec depending on the pulse drive power and wave form)

IDEX OPTICS & PHOTONICS MARKETPLACE

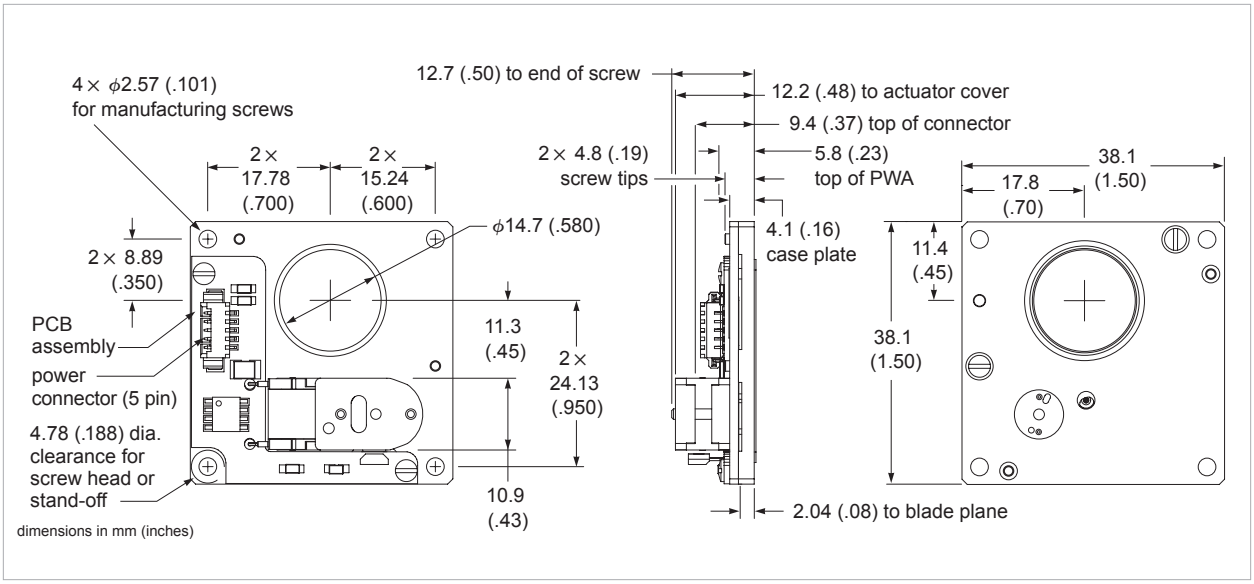

04 RDI 131 Shutter Drawing

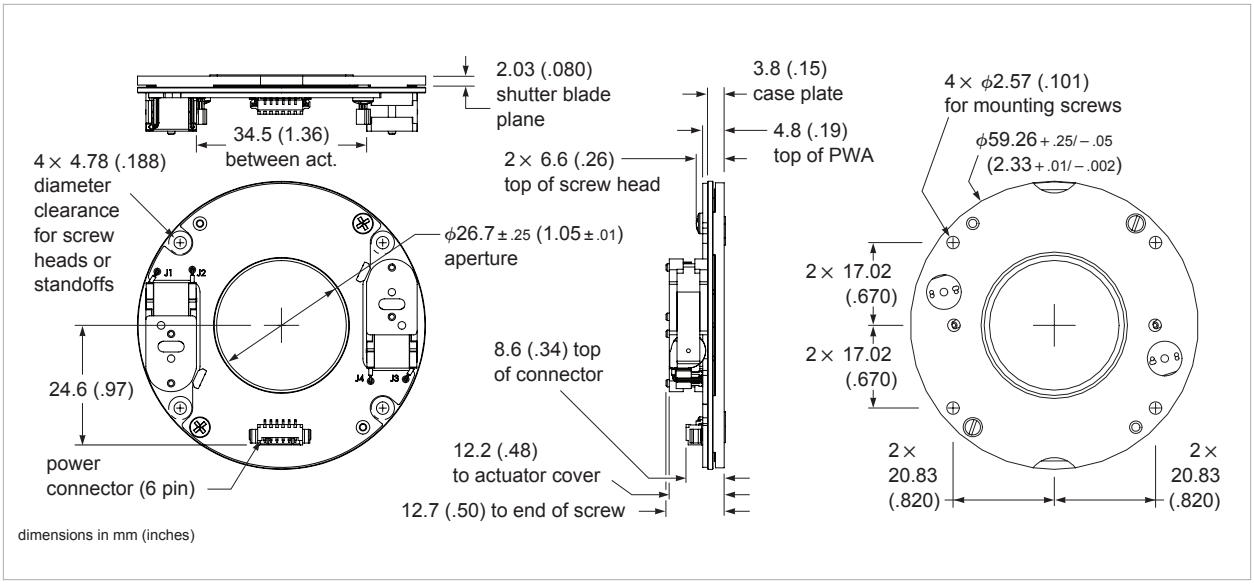

04 RDI 132 Shutter Drawing

STEPPER MOTOR SHUTTERS

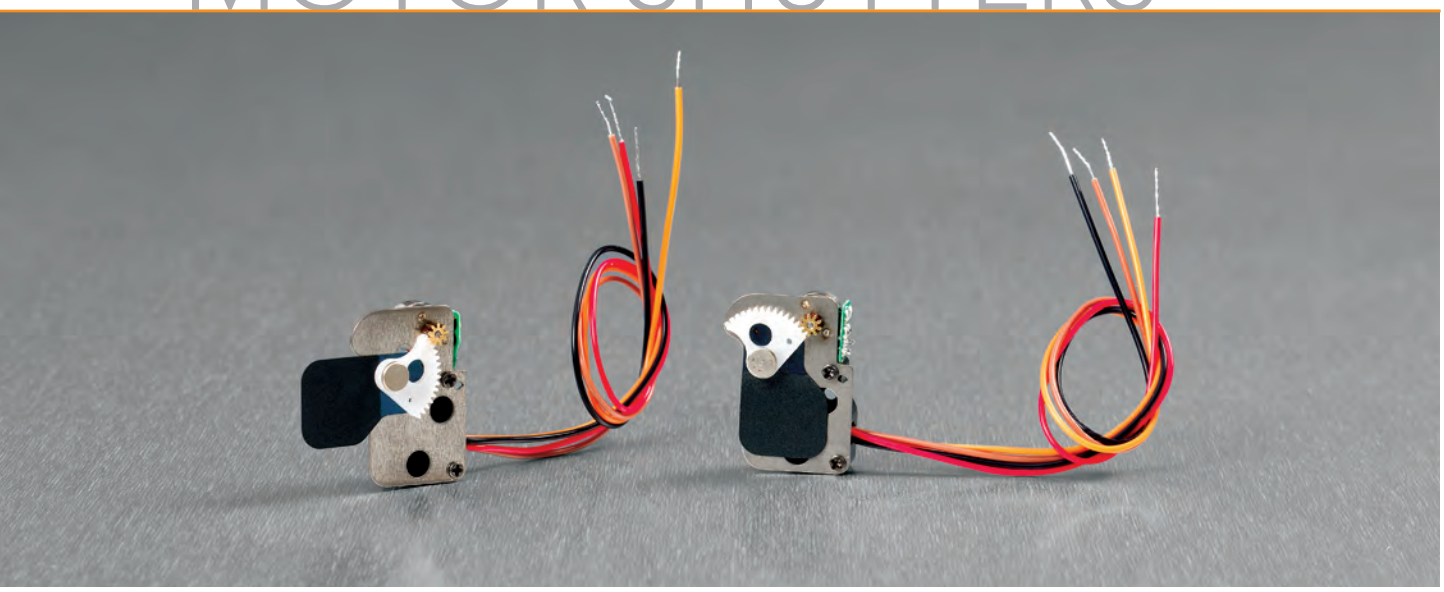

Melles Griot stepper shutters use miniature stepper motors and geared drives, providing reliable low-power performance in a very compact package. Blade shape and coatings are optimized for visible and IR imaging, making them ideal for applications such as miniaturized night vision cameras and sights. The controlled speed/motion of the stepper drive minimizes blade stop impact, for long life, low wear, and low noise. The shutters are designed to withstand harsh environmental conditions, including shock, vibration and extreme temperatures typical in transportation and field portable applications.

SELECTION GUIDE 274

STEPPER SHUTTERS 275

SELECTION GUIDE

Product Type	Actuator Type	Unpowered State	Operating Temperature	Controller	Blade Coating	Applications	Page
STEPPER SHUTTERS	Stepper Motor	Bi-stable	-40°C to + 70°C	Stepper Motor Controller	Flat black, high IR emissivity	Night vision, thermography, imaging, lab/research	275

IDEX OPTICS & PHOTONICS MARKETPLACE

MELLES GRIOT

STEPPER SHUTTERS

Melles Griot stepper shutters use miniature stepper motors and geared drives, providing reliable low-power performance in a very compact package. Blade shape and coatings are optimized for visible and IR imaging, making them ideal for applications such as miniaturized night vision cameras and sights. The controlled speed/motion of the stepper drive minimizes blade stop impact, for long life, low wear, and low noise. The shutters are designed to withstand harsh environmental conditions, including shock, vibration and extreme temperatures typical in transportation and field portable applications.

- Micro-miniature package
- Low weight
- Low power consumption

Specifications

Durability: Long life

Durability: Low impact/Low wear

Performance/Reliability: Repeatable speed/time control

Performance/Reliability: Shock and vibration resistance

Performance/Reliability: Reliable operation from -40°C to +70°C

Standard Products

Aperture (mm)	Electric Drive	Required Drive Current[1] (mA)	Drive Voltage (Vdc)	Actuation Speed[2] (msec)	Holding Current (mA)	Number of Blades	PART NUMBER
Stepper Shutters							
Rectangular 9.84 x 8.48	Bipoar Stepper, 2 Phase	70	3.0 - 5.0	60	0 (not required)	1	04 SMS 001
Rectangular 15.92 x 13.20	Bipoar Stepper, 2 Phase	140	3.0 - 5.0	60	0 (not required)	1	04 SMS 002

[1] Per phase, @ 20°C,
[2] Maximum transition time

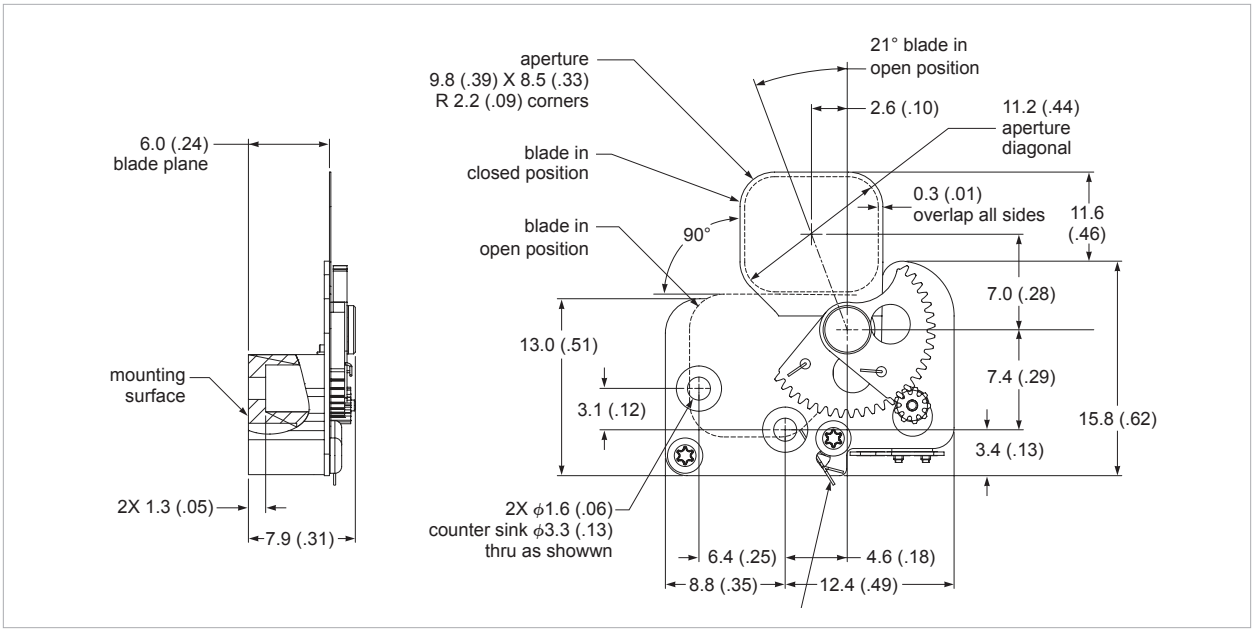

04 SMS 001 Stepper Shutter Drawing

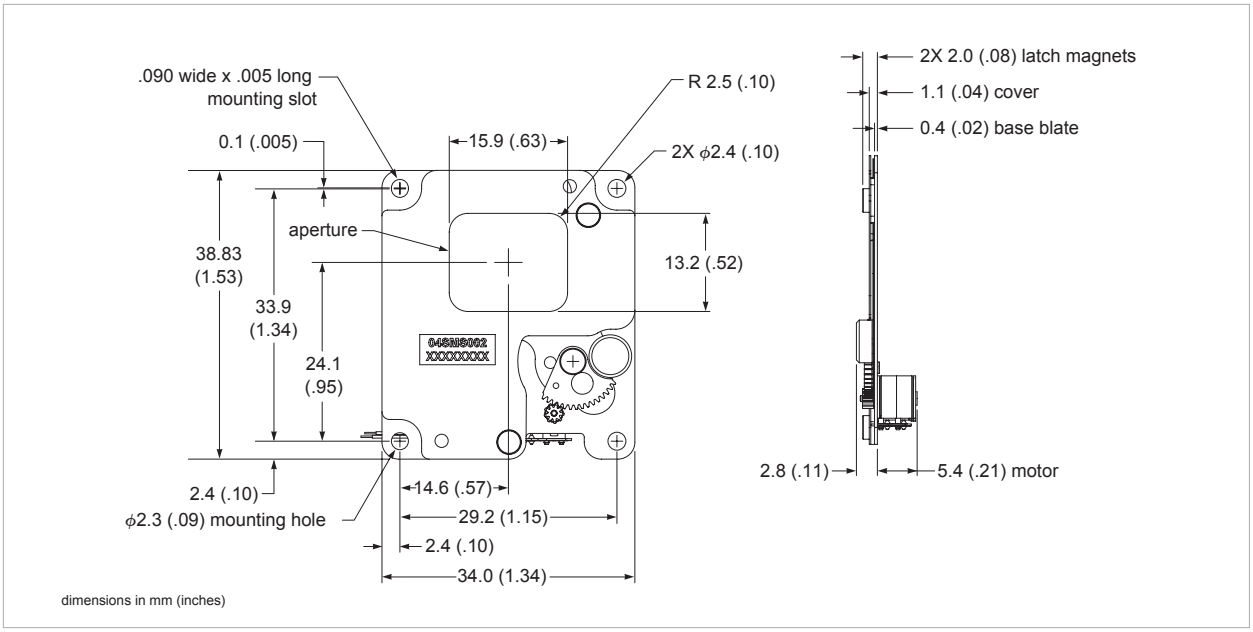

04 SMS 002 Stepper Shutter Drawing

IDEX OPTICS & PHOTONICS MARKETPLACE

SOLENOID SHUTTERS

Melles Griot solenoid shutters offer high-performance in a range of operating conditions. They are frequently used in imaging applications and laboratory research. Our family of solenoid shutters includes high-performance IES shutters, UltraThin electronic shutters, and Extreme Service shutters for harsh environments.

SELECTION GUIDE 278

IES SHUTTERS 279

ULTRA THIN SHUTTERS 281

EXTREME SERVICE SHUTTERS 283

SELECTION GUIDE

Product Type	Actuator Type	Unpowered State	Operating Temperature	Controller	Blade Coating	Applications	Page
IES SHUTTERS	Solenoid	Normally closed	-10°C to + 40°C	04 ISC 850 or similar	Flat black	Imaging, lab/research	279
ULTRATHIN SHUTTERS	Solenoid	Normally open and normally closed models	-10°C to + 40°C	04 ISC 850 or similar	Flat black	Imaging, lab/research	281
EXTREME SERVICE SHUTTERS	Solenoid	Normally open and normally closed models	-40°C to + 70°C	04 ISC 850 or similar	Flat black, high IR emissivity	Night vision, thermography, imaging, lab/research	283

IDEX OPTICS & PHOTONICS MARKETPLACE

MELLES GRIOT

IES SHUTTERS

Melles Griot IES™-series electronic shutters are ideal for laboratory and OEM applications that demand the ability to shutter light beams with 100% transmission and high extinction. An iris diaphragm allows adjustment of the shutter's clear aperture from maximum to approximately 10% of maximum. For electronic flash synchronization or event triggering, IES shutters include an X-synchronization switch that provides electrical continuity when the shutter blades are fully open. For ease of setup, a manual actuation lever permits the opening and closing of the shutters without an electrical signal. All shutters are supplied with a mounting flange that threads onto the shutter's rear outer mounting threads.

Specifications

Compatibility: Controllers are available for 12 Vdc shutters.

Construction: Spring-steel blades with a Teflon®-impregnated, black matte finish provide smooth and dependable operation.

Construction: Include an adjustable iris diaphragm, X synchronization, and a manual actuation lever that allows the shutter to operate without an electrical signal.

Performance/Reliability: Reliable, multiblade shutter mechanism guarantees high operational speed and near 100% light extinction.

Performance/Reliability: 12 Vdc continuous rated solenoid coils are standard (requiring minimum 48 Vdc pulse drive). Solenoids are also available in 3, 6, 24, and 48 Vdc.

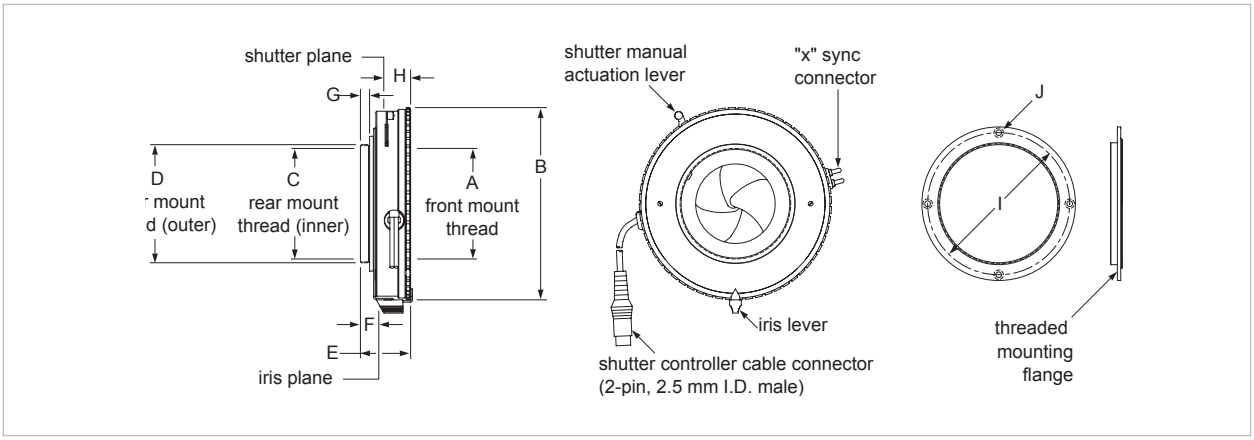

04 IES-series electronic shutter

Standard Products

Dimension Code	A (mm)	B (mm)	C (mm)	D (mm)	E (mm)	F (mm)	G (mm)	H (mm)	I (mm)
IES™ Electronic Shutters, Mechanical Dimensions									
Type 1	M31.2 x 0.50	63.0	M31.2 x 0.50	M33.7 x 0.60	23.9	8.5	6.5	13.4	42
Type 2	M45.0 x 0.50	87.3	M45.0 x 0.50	M48.6 x 0.64	26.4	9.5	6.2	14.9	60.6
Type 3	M59.6 x 0.64	103.3	M59.6 x 0.64	M63.5 x 0.85	27.0	9.8	4.7	15.7	76.4
Type 4	M76.2 x 0.85	132.0	M76.2 x 0.85	M82.1 x 0.85	34.0	9.5	6.0	22.5	97.2

Standard Products

Maximum Aperture (mm)	Minimum Aperture (mm)	Actuation Speed (msec)	Diaphragm Blades	Shutter Blades	Rated Solenoid Voltage (Vdc)	Connector Included	Dimension Code	PART NUMBER
IES™ Electronic Shutters, (Configuration: normally closed)								
25.4	1.6	17	10	5	3	No	Type 1	04 IES 212
25.4	1.6	17	10	5	6	No	Type 1	04 IES 218
25.4	1.6	17	10	5	12	Yes	Type 1	04 IES 211
25.4	1.6	17	10	5	24	No	Type 1	04 IES 220
25.4	1.6	17	10	5	48	No	Type 1	04 IES 222
34.9	2.2	17	10	5	6	No	Type 2	04 IES 224
34.9	2.2	17	10	5	12	Yes	Type 2	04 IES 213
34.9	2.2	17	10	5	24	No	Type 2	04 IES 226
34.9	2.2	17	10	5	48	No	Type 2	04 IES 228
42.7	3.4	33	10	5	6	No	Type 3	04 IES 230
42.7	3.4	33	10	5	12	Yes	Type 3	04 IES 214
42.7	3.4	33	10	5	24	No	Type 3	04 IES 232
42.7	3.4	33	10	5	48	No	Type 3	04 IES 234
63.5	5.1	33	12	6	6	No	Type 4	04 IES 236
63.5	5.1	33	12	6	12	Yes	Type 4	04 IES 215
63.5	5.1	33	12	6	24	No	Type 4	04 IES 238
63.5	5.1	33	12	6	48	No	Type 4	04 UTS 240

IDEX OPTICS & PHOTONICS MARKETPLACE

MELLES GRIOT

ULTRA THIN SHUTTERS

Melles Griot UltraThin™-series electronic shutters are optimized for OEM applications that require compact size, low weight, and low-voltage operation. A reliable, multiblade shutter mechanism guarantees high operational speed and near 100% light extinction. Spring-steel blades with a Teflon®-impregnated, black matte finish provide smooth and dependable operation. 12 Vdc continuous rated solenoid coils are standard (requiring minimum 48-Vdc pulse drive). 3, 6, 24, and 48-Vdc solenoids are also available.

- Smooth and dependable operation
- Shutters may be mounted in any orientation

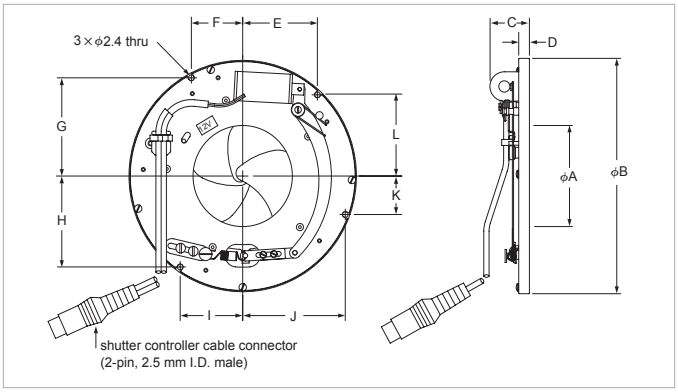

04 UTS-series UltraThin™ electronic shutter

Specifications

Compatibility: Controllers are available for 12 Vdc shutters.

Construction: Designed to fit into restricted spaces.

Construction: Spring-steel blades with a Teflon®-impregnated, black matte finish provide smooth and dependable operation.

Performance/Reliability: Reliable, multiblade shutter mechanism guarantees high operational speed and near 100% light extinction.

Performance/Reliability: 12 Vdc continuous rated solenoid coils are standard (requiring minimum 48 Vdc pulse drive). Solenoids are also available in 3, 6, 24, and 48 Vdc.

Performance/Reliability: Normally closed and normally open blade configurations are available.

Standard Products

Dimension Code	A (mm)	B (mm)	C (mm)	D (mm)	E (mm)	F (mm)	G (mm)	H (mm)	I (mm)	J (mm)	K (mm)	L (mm)
UltraThin™ Electronic Shutters, Mechanical Dimensions												
Type1	25.2	57.8	13.6	3.4	17.6	17.5	18.8	-	-	3.4	25.1	18.0
Type1 a	25.2	57.8	13.6	3.4	17.8	23.7	9.3	25.1	4.3	-	-	18.2
Type2	34.9	82.5	16.5	4.2	-	15.2	35.2	23.5	29.9	31.9	20.9	-
Type3	42.7	99.4	17.2	4.8	-	24.2	40.3	39.8	24.8	44.9	13.9	-
Type4	63.5	126.0	24.3	6.6	22.9	-	-	7.5	58.2	35.0	47.2	53.9

Standard Products

Clear Aperture (mm)	Actuation Speed (msec)	Shutter Blades	Peak Pulse Current (mA)	Rated Solenoid Voltage (Vdc)	Connector Included	Dimension Code	PART NUMBER
UltraThin™ Electronic Shutters, (Configuration: normally closed)							
25.2	17	5	4000	3	No	Type 1	04 UTS 206
25.2	17	5	2000	6	No	Type 1	04 UTS 208
25.2	17	5	1000	12	Yes	Type 1	04 UTS 201
25.2	17	5	1000	12	No	Type 1	04 UTS 210
25.2	17	5	460	24	No	Type 1	04 UTS 212
25.2	17	5	230	48	No	Type 1	04 UTS 214
25.2	17	5	4000	3	No	Type 1a	04 UTS 216
25.2	17	5	2000	6	No	Type 1a	04 UTS 218
25.2	17	5	1000	12	No	Type 1a	04 UTS 220
25.2	17	5	460	24	No	Type 1a	04 UTS 222
25.2	17	5	230	48	No	Type 1a	04 UTS 224
34.9	17	5	2800	6	No	Type 2	04 UTS 226
34.9	17	5	1600	12	Yes	Type 2	04 UTS 203
34.9	17	5	1600	12	No	Type 2	04 UTS 228
34.9	17	5	740	24	No	Type 2	04 UTS 230
34.9	17	5	380	48	No	Type 2	04 UTS 232
34.9	17	5	2800	6	No	Type 2	04 UTS 234
34.9	17	5	1600	12	No	Type 2	04 UTS 236
34.9	17	5	740	24	No	Type 2	04 UTS 238
34.9	17	5	380	48	No	Type 2	04 UTS 240
42.7	33	5	2800	6	No	Type 3	04 UTS 242
42.7	33	5	1600	12	Yes	Type 3	04 UTS 204
42.7	33	5	1600	12	No	Type 3	04 UTS 244
42.7	33	5	740	24	No	Type 3	04 UTS 246
42.7	33	5	380	48	No	Type 3	04 UTS 248
42.7	33	5	2800	6	No	Type 3	04 UTS 250
42.7	33	5	1600	12	No	Type 3	04 UTS 252
42.7	33	5	740	24	No	Type 3	04 UTS 254
42.7	33	5	380	48	No	Type 3	04 UTS 256
63.5	33	6	4000	6	No	Type 4	04 UTS 258
63.5	33	6	2000	12	Yes	Type 4	04 UTS 205
63.5	33	6	2000	12	No	Type 4	04 UTS 260
63.5	33	6	1100	24	No	Type 4	04 UTS 262
63.5	33	6	460	48	No	Type 4	04 UTS 264
63.5	33	6	4000	6	No	Type 4	04 UTS 266
63.5	33	6	2000	12	No	Type 4	04 UTS 268
63.5	33	6	1100	24	No	Type 4	04 UTS 270
63.5	33	6	460	48	No	Type 4	04 UTS 272

IDEX OPTICS & PHOTONICS MARKETPLACE

MELLES GRIOT

EXTREME SERVICE SHUTTERS

ExtremeService™ shutters from Melles Griot offer industry-leading reliability in harsh environmental conditions. Their robust, temperature insensitive design thrives at temperatures as low as -40°C and as high as 70°C. The coating on the blades is highly emissive in the infrared spectral region, making these shutters an ideal choice for calibrating uncooled sensors in FLIR systems. ExtremeService™ shutters provide the reliability and control needed for night-vision and infrared-illumination systems, as well as for a wide range of analytical, metrology, and photonics instrumentation.

- Operates reliably from -40°C to +70°C
- Proprietary low-friction, high-IR emissivity blade coating
- Offered in normally closed and normally open configurations
- Available with 12 Vdc or 3 Vdc solenoids
- Controllers are available for 12 Vdc shutter

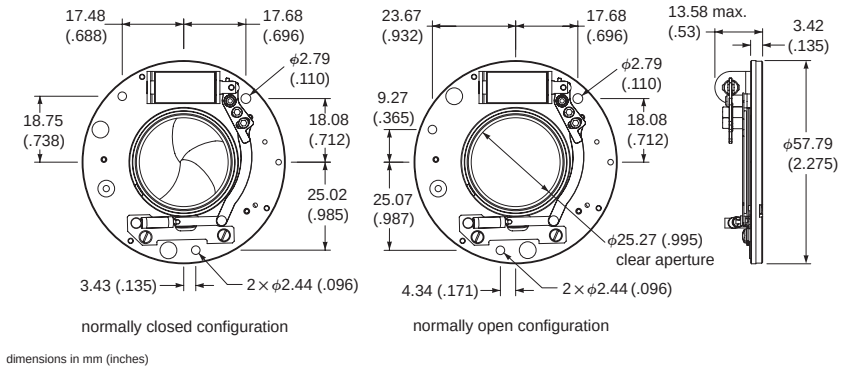

04 ESC- and ES0-series shutters

Standard Products

Clear Aperture	Maximum Speed (sec)	Shutter Blades	Peak Pulse Current (mA)	Holding Current (mA)	Rated Solenoid Voltage (Vdc)	Configuration	PART NUMBER
ExtremeService™ Electronic Shutters							
25.20	1/60	5	1000	120	12	normally open	04 ESO 121
25.20	1/60	5	1000	120	12	normally closed	04 ESC 121
25.20	1/60	5	4000	500	3	normally open	04 ESO 031
25.20	1/60	5	4000	500	3	normally closed	04 ESC 031

SHUTTER ACCESSORIES

Our shutter products are complemented with accessories to assist with integration to your operating environment.

We provide controllers, power supplies and shutter mounts to meet your regional voltage and computing requirements.

Please refer to our web site marketplace.idexop.com for updated information.

SELECTION GUIDE 286

ELECTRONIC SHUTTER MOUNTS 287

ROTOR DRIVE SHUTTER CONTROLLERS 288

ELECTRONIC SHUTTER CONTROLLERS 289

SELECTION GUIDE

Product Type	Page
ELECTRONIC SHUTTER MOUNTS	287
ROTOR DRIVE SHUTTER CONTROLLERS	288
ELECTRONIC SHUTTER CONTROLLERS	289

MELLES GRIOT

ELECTRONIC SHUTTER MOUNTS

These mounts provide a simple, straightforward way to secure a Melles Griot electronic shutter to a post. To mount a shutter, the mounting ring of the shutter is removed, the shutter is inserted into the mount and held in place by rethreading the mounting ring onto the shutter. The mounting post has an M6-threaded hole and can be easily affixed to other Melles Griot posts.

- Electronic-shutter mounts allow quick, easy mounting of IES-series electronic shutters
- Mounting post has M6 thread and can be easily secured to other Melles Griot posts
- Durable, black finish provides control of light reflections

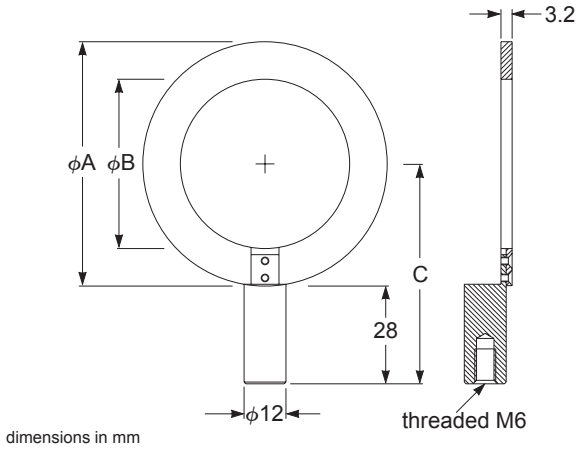

Electronic-shutter mounts

Standard Products

Electronic Shutter	ØA (mm)	ØB (mm)	C (mm)	PART NUMBER
Electronic Shutter Mounts				
04 IES 211, 04 IES 212, 04 IES 218, 04 IES 220, 04 IES 222	50.5	34.0	55.5	07 HIS 001
04 IES 213, 04 IES 224, 04 IES 226, 04 IES 228	70.0	49.0	63.0	07 HIS 003

MELLES GRIOT

ROTOR DRIVE SHUTTER CONTROLLERS

Melles Griot rotor drive shutter controllers provide actuation signals to rotor drive shutters and can operate locally via manual push button, or remotely via TTL signal. The rotor drive shutter controller is supplied with the adaptor cable for connecting the controller to any 9V rotor drive shutter. The unit is powered by the 12 V power supply available separately.

- Drives Melles Griot rotor drive shutters
- Local or remote operation
- Compliant with safety and environmental standards for commercial electronics
- Actuate with manual push button or standard TTL input signal
- OEM (unpackaged) control board available

Specifications

Input Voltage: 12 Vdc

Input Current: 2.5 A Minimum

TTL Input: 2.4 – 5.0 Vdc, 2 mA

Maximum Repetition Rate: 3 Hz

Weight: 2.44 kg (1.11 lb)

Output Voltage: 9 Vdc

Output Current:
Single Blade Shutter: 0.22 A
Dual Blade Shutter: 0.45 A

Input Voltage: 90 – 264 Vac, 47 – 63 Hz

Dimensions (L x W x H)[4]:
152 x 84 x 48 mm (6 x 3.4 x 1.9 inches)

Connectors:
dc Input: Coaxial barrel (panel mounted)
Shutter Drive: Molex 51021 - 0400 (adaptor cable)
TTL Input: BNC (panel mounted)

Standard Products

Description	Plug Style	PART NUMBER
Electronic Shutter Controller		
RDS Controller		04 RSC 450
Shutter Controller Power Supplies		
12-Vdc Power Supply	3 prong North American	04 IPS 833
12-Vdc Power Supply	2 prong European	04 IPS 835
12-Vdc Power Supply	Japanese	04 IPS 837

IDEX OPTICS & PHOTONICS MARKETPLACE

MELLES GRIOT

ELECTRONIC SHUTTER CONTROLLERS

Melles Griot electronic shutter controllers facilitate the operation of all standard Melles Griot 12 volt IES™ and UltraThin™ shutters. For convenience, a number of shutter control functions are designed into the controller, including eight preset shutter speeds ranging from 1/60th of a second to two seconds. For local operation, these functions are actuated using the controller's manual pushbutton trigger switch. For remote operation, the functions are actuated using a TTL pulse or signal. A shutter control board, which can be panel mounted, is available separately for OEM applications.

- Drives all Melles Griot 12 V IES™ and UltraThin™ shutters
- Local or remote operation
- CE compliant
- 8 preset shutter speeds
- Actuate with manual pushbutton or standard TTL input signal
- Infinitely adjustable shutter speeds from 1/60th of a second to 30 seconds
- Easy control of long shutter speeds via B (bulb) and T (time) control functions
- OEM (unpackaged) control board also available

Specifications

Input Voltage: 12 Vdc

Input Current: 2.5 A Minimum

Output Voltage:

Initial Pulse: 48 Vdc for 10 – 20 msec

Holding Voltage: 6 Vdc

Preset Shutter Speeds: 2, 1, 1/2, 1/4, 1/8, 1/15, 1/30,1/60 sec

TTL Input: 3 – 7 Vdc, 15 mA (opto-isolated, floating ground)

Maximum Repetition Rate: 2 Hz

Minimum Recharge Time: 200 msec

Input Voltage: 90 – 264 Vac, 47 – 63 Hz

Dimensions (L x W x H): 149.9 x 79.5 x 46.2 mm (5.90 x 3.13 x 1.82 in.)

Weight: 0.32 kg (11.2 oz)

Connectors, Packaged Controller:
dc Input: Coaxial barrel
Shutter Drive: 50 Q coaxial barrel

TTL Input: BNC

Connectors, OEM Controller Board:
dc Input: Coaxial barrel
TTL and Shutter Drive: 6 in. pigtailed leads

Standard Products

Description	Plug Style	PART NUMBER
Electronic Shutter Controller		
Controller		04 ISC 450
OEM Controller Board		59 OSC 205
Shutter Controller Power Supplies		
12-Vdc Power Supply	3 prong North American	04 IPS 833
12-Vdc Power Supply	2 prong European	04 IPS 835
12-Vdc Power Supply	Japanese	04 IPS 837

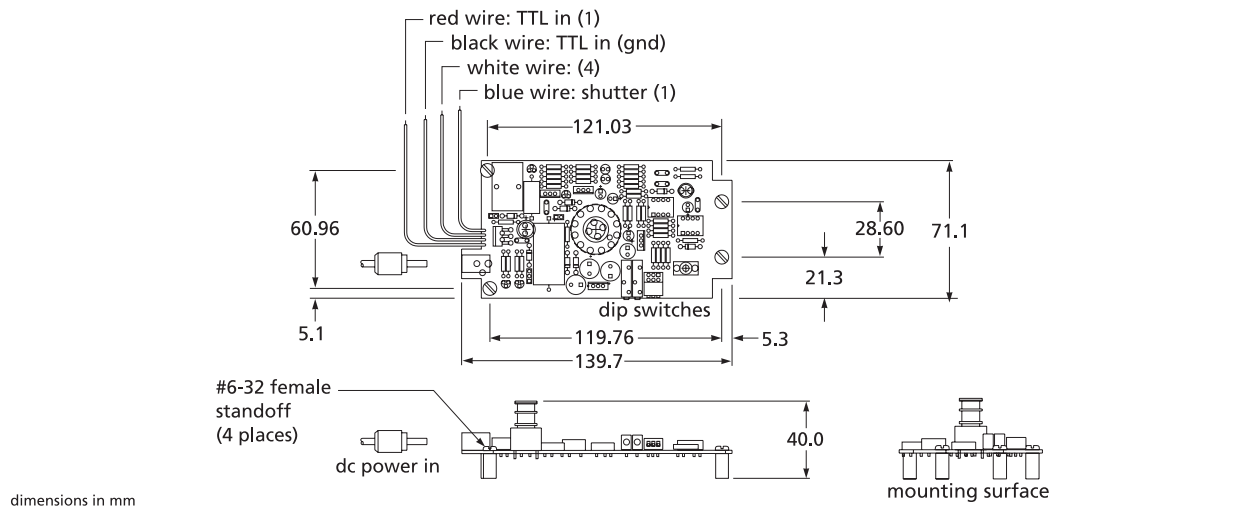

59 OSC 205 Electronic Shutter Controller Board Drawing

APPLICATION NOTE

TTL Operation

In the TTL setting, the shutter will actuate for an uncalibrated time when the manual trigger is pressed. To prevent the shutter from actuating as a result of electronic noise and spurious pulses, disconnect the TTL input plug when not in use.

OPTICS & PHOTONICS MARKETPLACE

HELIUM NEON LASERS

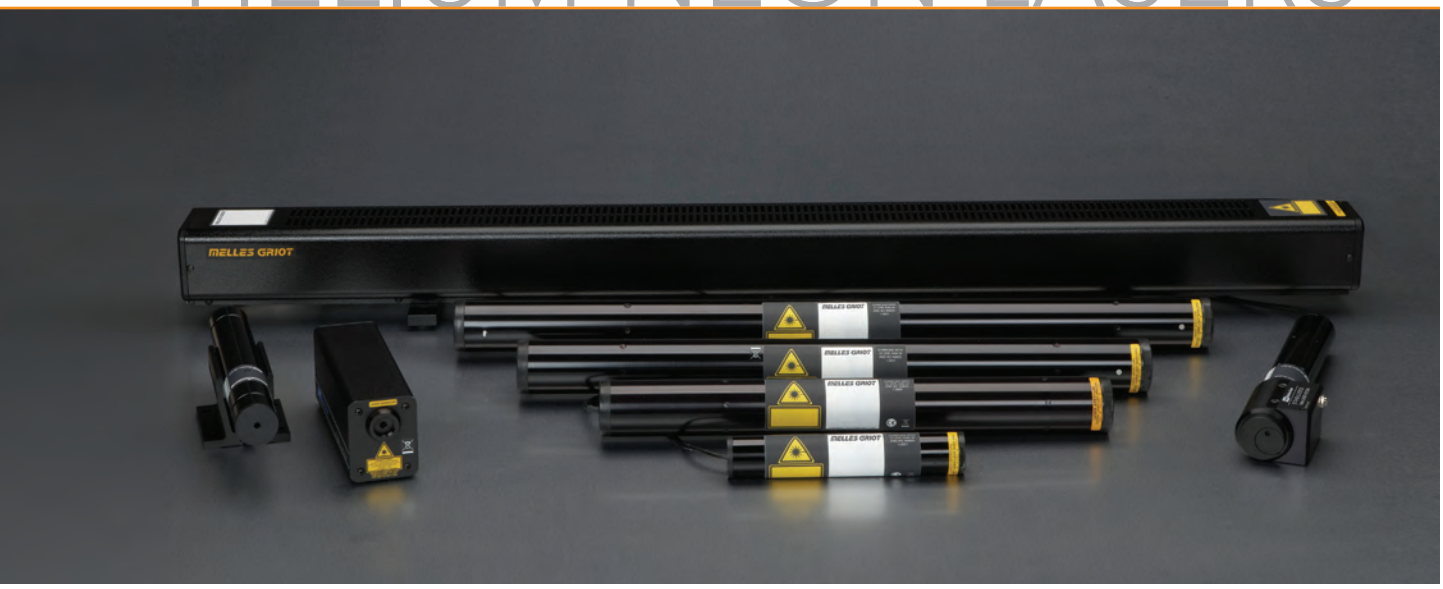

Melles Griot is a world leader in gas laser technology with over 35 years of experience and more than 3 million lasers shipped. Our helium neon lasers exhibit long life, excellent stability, and field-proven performance. We offer a broad range of wavelengths with randomly or linearly polarized output. Products include full turnkey systems with laser head and controller. For OEM's, we offer plasma tubes and fully customized configurations.

SELECTION GUIDE 292

RED (632.8 nm)
LINEAR POLARIZATION: LHP 293
RANDOM POLARIZATION: LHR 294

GREEN (543.5 nm)
LINEAR POLARIZATION: LGP 295
RANDOM POLARIZATION: LGR 296

YELLOW (594.1 nm)
LINEAR POLARIZATION: LYP 297
RANDOM POLARIZATION: LYR 298

FREQUENCY STABILIZED
(632.8 nm): STP 299

SELECTION GUIDE

Product Type	Wavelength	Page
RED: LHP SERIES (LINEAR POLARIZATION)	632.8 nm	293
RED: LHR SERIES (RANDOM POLARIZATION)	632.8 nm	294
GREEN: LGP SERIES (LINEAR POLARIZATION)	543.5 nm	295
GREEN: LGR SERIES (RANDOM POLARIZATION)	543.5 nm	296
YELLOW: LYP SERIES (LINEAR POLARIZATION)	594.1 nm	297
YELLOW: LYR SERIES (RANDOM POLARIZATION)	594.1 nm	298
FREQUENCY STABILIZED: STP SERIES	632.8 nm	299

MELLES GRIOT

RED (632.8 nm) LINEAR POLARIZATION: LHP

The LHP Series linearly polarized lasers have output power of up to 35 mW, making them ideal for Raman spectroscopy, holography, fast scanning, and test and measurement applications. All laser heads are mounted in rugged aluminum housings and come with a matched power supply. All systems meet CDRH and IEC requirements for laser equipment safety, and the 230 Vac versions are CE compliant. They can be mounted in a variety of orientations without sacrificing power or performance. Systems are convection cooled and operate from standard 115 Vac or 230 Vac outlets.

- Complete systems, including power supply
- 115 or 230 Vac versions available

Features

Product Code: LHP

Beam Quality: > 90% TEM_{00}

Output Power: Up to 35 mW

Pointing Stability: < 0.03 mrad

Polarization: Linear

Power Stability: ± 2.5%

Regulatory Approvals: CDRH, IEC, and CE (230 Vac only) compliant

Wavelength: 632.8 nm

Standard Products

Power (mW)	Beam Diameter (1/e²) Nominal (mm)	Beam Divergence (1/e²) Nominal (mrad)	Laser Head Dimensions Length x Diameter (mm)	Power Supply Dimensions W x H x L (mm)	Safety Classification		PART NUMBER
					CDRH	IEC	
LHP							
0.5	0.46	1.8	177.8 x 31.8	128.3 x 61.0 x 133.4	Class II	Class 2	25-LHP-213
1	0.59	1.4	271.8 x 44.5	128.3 x 61.0 x 133.4	Class IIIa	Class 3R	25-LHP-111
2	0.76	1.1	279.9 x 35.1	128.3 x 61.0 x 133.4	Class IIIa	Class 3R	25-LHP-073
2	0.59	1.4	271.8 x 44.5	128.3 x 61.0 x 133.4	Class IIIa	Class 3R	25-LHP-121
2.5	0.52	1.5	224.8 x 31.8	128.3 x 61.0 x 133.4	Class IIIa	Class 3R	25-LHP-691
5	0.8	1.0	396.2 x 44.5	128.3 x 61.0 x 133.4	Class IIIb	Class 3B	25-LHP-151
7	1.02	0.8	455.9 x 44.5	128.3 x 61.0 x 133.4	Class IIIb	Class 3B	25-LHP-171
10	0.65	1.3	483.9 x 44.5	160.8 x 53.9 x 241.3	Class IIIb	Class 3B	25-LHP-991
17	0.96	0.9	637.3 x 44.5	160.8 x 53.9 x 241.3	Class IIIb	Class 3B	25-LHP-925
25	1.23	0.7	Rectangular: 1030.0 (L) x 78.7 (W) x 75.6 (H)	160.8 x 53.9 x 241.3	Class IIIb	Class 3B	25-LHP-828
35	1.23	0.7	Rectangular: 1030.0 (L) x 78.7 (W) x 75.6 (H)	160.8 x 53.9 x 241.3	Class IIIb	Class 3B	25-LHP-928

MELLES GRIOT

RED (632.8 nm) RANDOM POLARIZATION: LHR

LHR series randomly polarized lasers have output power of up to 17 mW, making them ideal for Raman spectroscopy, holography, fast scanning, and test and measurement applications. All laser heads are mounted in rugged aluminum housings and include a matched power supply. All systems meet CDRH and IEC requirements for laser equipment safety, and the 230 Vac versions are CE compliant. They can be mounted in a variety of orientations without sacrificing power or performance. Systems are convection cooled and operate from standard 115 Vac or 230 Vac outlets.

- Complete systems, including power supply
- 115 or 230 Vac versions available

Features

Product Code: LHR

Beam Quality: > 90% TEM_{00}

Output Power: Up to 17 mW

Pointing Stability: < 0.03 mrad

Polarization: Random

Power Stability: ± 2.5%

Regulatory Approvals: CDRH, IEC, and CE (230 Vac only) compliant

Wavelength: 632.8 nm

Standard Products

Power (mW)	Beam Diameter (1/e²) Nominal (mm)	Beam Divergence (1/e²) Nominal (mrad)	Laser Head Dimensions Length x Diameter (mm)	Power Supply Dimensions W x H x L (mm)	Safety Classification		PART NUMBER
					CDRH	IEC	
LHR							
0.5	0.46	1.8	177.8 x 31.8	128.3 x 61.0 x 133.4	Class II	Class 2	25-LHR-213
1	0.59	1.4	271.8 x 44.5	128.3 x 61.0 x 133.4	Class IIIa	Class 3R	25-LHR-111
2	0.76	1.1	279.9 x 35.1	128.3 x 61.0 x 133.4	Class IIIa	Class 3R	25-LHR-073
2	0.59	1.4	271.8 x 44.5	128.3 x 61.0 x 133.4	Class IIIa	Class 3R	25-LHR-121
2.5	0.52	1.6	224.8 x 31.8	128.3 x 61.0 x 133.4	Class IIIa	Class 3R	25-LHR-691
5	0.8	1.1	396.2 x 44.5	128.3 x 61.0 x 133.4	Class IIIb	Class 3B	25-LHR-151
7	1.02	0.8	455.9 x 44.5	128.3 x 61.0 x 133.4	Class IIIb	Class 3B	25-LHR-171
10	0.65	1.3	483.9 x 44.5	160.8 x 53.9 x 241.3	Class IIIb	Class 3B	25-LHR-991
17	0.96	0.9	637.3 x 44.5	160.8 x 53.9 x 241.3	Class IIIb	Class 3B	25-LHR-925

IDEX OPTICS & PHOTONICS MARKETPLACE

MELLES GRIOT

GREEN (543.5 nm) LINEAR POLARIZATION: LGP

Melles Griot offers a variety of green cylindrical HeNe linearly polarized laser systems, to match your application requirements. All laser heads are mounted in rugged aluminum housings and come with a matched power supply. All systems meet CDRH and IEC requirements for laser equipment safety, and the 230 Vac versions are CE compliant. Systems are convection cooled and operate from standard 115 Vac or 230 Vac outlets.

- Complete systems, including power supply
- 115 or 230 Vac versions available

Features

Product Code: LGP

Beam Quality: > 90% TEM_{00}

Output Power: Up to 1.0 mW

Pointing Stability: < 0.03 mrad

Polarization: Linear

Power Stability: ± 2.5%

Regulatory Approvals: CDRH, IEC, and CE (230 Vac only) compliant

Wavelength: 543.5 nm

Standard Products

Power (mW)	Beam Diameter (1/e²) Nominal (mm)	Beam Divergence (1/e²) Nominal (mrad)	Laser Head Dimensions Length x Diameter (mm)	Power Supply Dimensions W x H x L (mm)	Safety Classification		PART NUMBER
					CDRH	IEC	
LGP							
0.3	0.77	0.9	396.2 x 44.5	128.3 x 61.0 x 133.4	Class IIIa	Class 3R	25-LGP-151
0.3	0.79	0.9	455.9 x 44.5	128.3 x 61.0 x 133.4	Class IIIa	Class 3R	25-LGP-173
1	0.86	0.8	510.3 x 44.5	160.8 x 53.9 x 241.3	Class IIIa	Class 3R	25-LGP-193

MELLES GRIOT

GREEN (543.5 nm) RANDOM POLARIZATION: LGR

Melles Griot offers a variety of green cylindrical HeNe randomly polarized laser systems, to match your application requirements. All laser heads are mounted in rugged aluminum housings and come with a matched power supply. All systems meet CDRH and IEC requirements for laser equipment safety, and the 230 Vac versions are CE compliant. Systems are convection cooled and operate from standard 115 Vac or 230 Vac outlets.

- Complete systems, including power supply
- 115 or 230 Vac versions available

Features

Product Code: LGR

Beam Quality: > 90% TEM_{00}

Output Power: Up to 2.0 mW

Pointing Stability: < 0.03 mrad

Polarization: Random

Power Stability: ± 2.5%

Regulatory Approvals: CDRH, IEC, and CE (230 Vac only) compliant

Wavelength: 543.5 nm

Standard Products

Power (mW)	Beam Diameter (1/e²) Nominal (mm)	Beam Divergence (1/e²) Nominal (mrad)	Laser Head Dimensions Length x Diameter (mm)	Power Supply Dimensions W x H x L (mm)	Safety Classification		PART NUMBER
					CDRH	IEC	
LGR							
0.5	0.77	0.9	396.2 x 44.5	128.3 x 61.0 x 133.4	Class IIIa	Class 3R	25-LGR-151
0.8	0.79	0.9	455.9 x 44.5	128.3 x 61.0 x 133.4	Class IIIa	Class 3R	25-LGR-173
1.5	0.86	0.8	510.3 x 44.5	160.8 x 53.9 x 241.3	Class IIIa	Class 3R	25-LGR-193
2	0.86	0.8	510.3 x 44.5	160.8 x 53.9 x 241.3	Class IIIa	Class 3R	25-LGR-393

IDEX OPTICS & PHOTONICS MARKETPLACE

MELLES GRIOT

YELLOW (594.1 nm) LINEAR POLARIZATION: LYP

Melles Griot manufactures a wide variety of yellow cylindrical HeNe linearly polarized laser systems. All laser heads are mounted in rugged aluminum housings and come with a matched power supply. All systems meet CDRH and IEC requirements for laser equipment safety, and the 230 Vac versions are CE compliant. Systems are convection cooled and operate from standard 115 Vac or 230 Vac outlets.

- Complete systems, including power supply
- 115 or 230 Vac versions available

Features

Product Code: LYP

Beam Quality: > 90% TEM_{00}

Output Power: Up to 2.0 mW

Pointing Stability: < 0.03 mrad

Polarization: Linear

Power Stability: ± 2.5%

Regulatory Approvals: CDRH, IEC, and CE (230 Vac only) compliant

Wavelength: 594.1 nm

Standard Product

Power (mW)	Beam Diameter (1/e²) Nominal (mm)	Beam Divergence (1/e²) Nominal (mrad)	Laser Head Dimensions Length x Diameter (mm)	Power Supply Dimensions W x H x L (mm)	Safety Classification		PART NUMBER
					CDRH	IEC	
LYP							
2	0.83	0.9	455.9 x 44.5	128.3 x 61.0 x 133.4	Class IIIa	Class 3R	25-LYP-173

MELLES GRIOT

YELLOW (594.1 nm) RANDOM POLARIZATION: LYR

Melles Griot offers a variety of yellow cylindrical HeNe randomly polarized laser systems, to match your application requirements. All laser heads are mounted in rugged aluminum housings and come with a matched power supply. All systems meet CDRH and IEC requirements for laser equipment safety, and the 230 Vac versions are CE compliant. Systems are convection cooled and operate from standard 115 Vac or 230 Vac outlets.

- Complete systems, including power supply
- 115 or 230 Vac versions available

Features

Product Code: LYR Series

Beam Quality: > 90% TEM_{00}

Output Power: Up to 2.0 mW

Pointing Stability: < 0.03 mrad

Polarization: Random

Power Stability: ± 2.5%

Regulatory Approvals: CDRH, IEC, and CE (230 Vac only) compliant

Wavelength: 594.1 nm

Standard Product

Power (mW)	Beam Diameter (1/e²) Nominal (mm)	Beam Divergence (1/e²) Nominal (mrad)	Laser Head Dimensions Length x Diameter (mm)	Power Supply Dimensions W x H x L (mm)	Safety Classification		PART NUMBER
					CDRH	IEC	
LYR							
2	0.83	0.9	455.9 x 44.5	128.3 x 61.0 x 133.4	Class IIIa	Class 3R	25-LYR-173

IDEX OPTICS & PHOTONICS MARKETPLACE

MELLES GRIOT

FREQUENCY STABILIZED (632.8 nm): STP

STP laser systems come with power supply, laser, and frequency controller in a very small package. A patented frequency adaptor allows frequency locking within 10 minutes, convenient for both the OEM and end user. The 25 STP 910 is a CDRH Class II (IEC Class 2) system and is limited to less than 1 mW output. The 25 STP 912 is a CDRH Class IIIa (IEC Class 3R) system. Both power and frequency can be manually adjusted.

These systems are ideal for use in systems and applications with space constraints or with fast response-time requirements.

- Frequency stability: better than 1 MHz
- Extremely compact
- Rapid warm-up to frequency lock (<10 minutes)
- Complete system, including power supply

Features

Product Code: STP

Beam Quality: > 90% TEM_{00}

Output Power: Up to 1.4 mW

Polarization: Linear

Power Stability: within ± 0.2%

Regulatory Approvals: CDRH, IEC, and CE (230 Vac only) compliant

Wavelength: 632.8 nm

Frequency Stability (8 Hours):< ± 1 MHz

Coherence Length (m): 300 (1 Hour)

Stabilizer Head Dimensions W x H x L (mm): 42.4 x 54.5 x 82.3

Standard Products

Power (mW)	Beam Diameter (1/e²) Nominal (mm)	Beam Divergence (1/e²) Nominal (mrad)	Safety Classification		Laser Head Dimensions Length x Diameter (mm)	Laser System Dimensions Overall Length (mm)	Power Supply Dimensions W x H x L (mm)	PART NUMBER
			CDRH	IEC				
STP								
0.5	0.48	1.7	Class II	Class 2	176.8 x 34.5	259.1	76.2 x 50.8 x 120.6	25-STP-910
1	0.54	1.5	Class IIIa	Class 3R	219.7 x 34.5	302.0	76.2 x 50.8 x 120.6	25-STP-912

DIODE LASERS

Melles Griot diode laser modules provide extremely compact and reliable sources of laser light with minimal thermal footprint and maximum resistance to mechanical shock and vibration. They provide excellent output power and pointing stability from an ultra-compact laser head. This is achieved through state-of-the art thermal management and mechanical design, which improves performance and reliability in harsh environments. A small footprint, versatile system integration, and product customization make our diode laser systems ideal for OEM applications in flow cytometry, confocal microscopy, and other medical applications.

SELECTION GUIDE 302
VIOLET: VDD SERIES 408 nm DIODE LASER 303
INDIGO: IDD SERIES 442 nm DIODE LASER 304
BLUE: BDD SERIES 488 nm DIODE LASER 305
GREEN: GDD SERIES 515 nm DIODE LASER 306
RED: RDD SERIES 640 nm DIODE LASER 307
CRN AND CFS SERIES DIODE LASERS 308

SELECTION GUIDE

Product Type	Wavelength	Page
VIOLET: VDD SERIES	408 nm	303
INDIGO: IDD SERIES	442 nm	304
BLUE: BDD SERIES	488 nm	305
GREEN: GDD SERIES	515 nm	306
RED: RDD SERIES	640 nm	307
CRN AND CFS SERIES	405 – 642 nm	308

IDEX OPTICS & PHOTONICS MARKETPLACE

MELLES GRIOT

VDD 408 nm DIODE LASER

The 26 VDD series diode laser systems provide extremely compact and reliable sources of laser light with minimal heat generation and maximum resistance to mechanical shock and vibration. They provide excellent output power and pointing stability from an ultra-compact laser head. This is achieved through state-of-the-art thermal management and mechanical design, which improves performance and reliability in harsh environments. A small footprint and versatile system integration make these diode laser systems ideal for OEM applications in flow cytometry, confocal microscopy, and other biomedical applications.

- Wavelength: 408 nm
- Analog and digital modulation
- Circular laser beam output
- Adjustable power
- CDRH, IEC, and CE compliant
- Excellent beam quality (M^2 <1.4)

Features

Output Power: 100 mW

Power Stability: ±2% peak-to-peak over 8 hours (ambient ±2°C)

Amplitude Noise:
Peak-to-Peak: <2% (20 Hz to 2 MHz, ambient ±2°C)
rms: <0.5% (20 Hz to 2 MHz, ambient ±2°C)

Pointing Stability: < 10 µrad/°C

Power Consumption: As low as 30 W

Communications: RS-232, Analog, and Digital modulation interfaces

Standard Product

λ (nm)	Power (mW)	Beam Diameter (1/e²) Nominal (mm)	Far Field Beam Divergence (1/e²) Nominal (mrad)	PART NUMBER
VDD				
408 ± 5	100	0.75 ± 0.15	1.2	26-VDD-301

MELLES GRIOT

IDD 442 nm DIODE LASER

The 26 IDD series diode laser systems provide extremely compact and reliable sources of laser light with minimal heat generation and maximum resistance to mechanical shock and vibration. They provide excellent output power and pointing stability from an ultra-compact laser head. This is achieved through state-of-the art thermal management and mechanical design, which improves performance and reliability in harsh environments. A small footprint and versatile system integration make these diode laser systems ideal for OEM applications in flow cytometry, confocal microscopy, and other biomedical applications.

- Wavelength: 442 nm
- Analog and digital modulation
- Circular laser beam output
- Adjustable power
- CDRH, IEC, and CE compliant
- Excellent beam quality (M^2 <1.4)

Features

Output Power: 40 mW

Power Stability: ± 2% peak-to-peak over 8 hours (ambient ±2° C)

Amplitude Noise:
Peak-to-Peak: <2% (20 Hz to 2 MHz, ambient ±2° C)
rms: <0.5% (20 Hz to 2 MHz, ambient ±2° C)

Pointing Stability: < 10 µrad/° C

Power Consumption: As low as 30 W

Communications: RS-232, Analog, and Digital modulation interfaces

Standard Product

λ (nm)	Power (mW)	Beam Diameter (1/e²) Nominal (mm)	Far Field Beam Divergence (1/e²) Nominal (mrad)	PART NUMBER
IDD				
442 ± 5	40	0.87± 0.17	1.2	26-IDD-101

IDEX OPTICS & PHOTONICS MARKETPLACE

MELLES GRIOT

BDD 488 nm DIODE LASER

The 26 BDD series diode laser systems provide extremely compact and reliable sources of laser light with minimal heat generation and maximum resistance to mechanical shock and vibration. They provide excellent output power and pointing stability from an ultra-compact laser head. This is achieved through state-of-the art thermal management and mechanical design, which improves performance and reliability in harsh environments. A small footprint and versatile system integration make these diode laser systems ideal for OEM applications in flow cytometry, confocal microscopy, and other biomedical applications.

- Wavelength: 488 nm
- Analog and digital modulation
- Circular laser beam output
- Adjustable power
- CDRH, IEC, and CE compliant
- Excellent beam quality (M^2 <1.4)

Features

Output Power: 45 mW

Power Stability: ±2% peak-to-peak over 8 hours (ambient ±2° C)

Amplitude Noise:
Peak-to-Peak: <2% (20 Hz to 2 MHz, ambient ±2° C)
rms: <0.5% (20 Hz to 2 MHz, ambient ±2° C)

Pointing Stability: < 10 µrad/°C

Power Consumption: As low as 30 W

Communications: RS-232, Analog, and Digital modulation interfaces

Standard Product

λ (nm)	Power (mW)	Beam Diameter (1/e²) Nominal (mm)	Far Field Beam Divergence (1/e²) Nominal (mrad)	PART NUMBER
BDD				
488 ± 5	45	0.7 ± 0.14	1.6	26-BDD-201

MELLES GRIOT

GDD 515 nm DIODE LASER

The 26 GDD series diode laser systems provide extremely compact and reliable sources of laser light with minimal heat generation and maximum resistance to mechanical shock and vibration. They provide excellent output power and pointing stability from an ultra-compact laser head. This is achieved through state-of-the art thermal management and mechanical design, which improves performance and reliability in harsh environments. A small footprint and versatile system integration make these diode laser systems ideal for OEM applications in flow cytometry, confocal microscopy, and other biomedical applications.

- Wavelength: 515 nm
- Analog and digital modulation
- Circular laser beam output
- Adjustable power
- CDRH, IEC, and CE compliant
- Excellent beam quality (M^2 <1.4)

Features

Output Power: 15 mW

Power Stability: ±2% peak-to-peak over 8 hours (ambient ±2° C)

Amplitude Noise:
Peak-to-Peak: <2% (20 Hz to 2 MHz, ambient ±2° C)
rms: <0.5% (20 Hz to 2 MHz, ambient ±2° C)

Pointing Stability: < 10 µrad/° C

Power Consumption: As low as 30 W

Communications: RS-232, Analog, and Digital modulation interfaces

Standard Product

λ (nm)	Power (mW)	Beam Diameter (1/e²) Nominal (mm)	Far Field Beam Divergence (1/e²) Nominal (mrad)	PART NUMBER
GDD				
515 ± 5	15	0.8 ± 0.16	1.5	26-GDD-001

IDEX OPTICS & PHOTONICS MARKETPLACE

MELLES GRIOT

RDD 640 nm DIODE LASER

The 26 RDD series diode laser systems provide extremely compact and reliable sources of laser light with minimal heat generation and maximum resistance to mechanical shock and vibration. They provide excellent output power and pointing stability from an ultra-compact laser head. This is achieved through state-of-the art thermal management and mechanical design, which improves performance and reliability in harsh environments. A small footprint and versatile system integration make these diode laser systems ideal for OEM applications in flow cytometry, confocal microscopy, and other biomedical applications.

- Wavelength: 640 nm
- Analog and digital modulation
- Circular laser beam output
- Adjustable power
- CDRH, IEC, and CE compliant
- Excellent beam quality (M^2 <1.4)

Features

Output Power: 100 mW

Power Stability: ±2% peak-to-peak over 8 hours (ambient ±2° C)

Amplitude Noise:
Peak-to-Peak: <2% (20 Hz to 2 MHz, ambient ±2° C)
rms: <0.5% (20 Hz to 2 MHz, ambient ±2° C)

Pointing Stability: < 10 µrad/° C

Power Consumption: As low as 30 W

Communications: RS-232, Analog, and Digital modulation interfaces

Standard Product

λ (nm)	Power (mW)	Beam Diameter (1/e²) Nominal (mm)	Far Field Beam Divergence (1/e²) Nominal (mrad)	PART NUMBER
RDD				
640 ± 5	100	0.9 ± 0.18	1.6	26-RDD-301

MELLES GRIOT

CRN AND CFS SERIES DIODE LASERS (405 – 642 nm)

The new 56-CRN and 57-CFS-series series diode laser systems from Melles Griot provide excellent beam performance and pointing stability from a compact self-contained package. This industry standard 70mm x 40mm x 40mm package is a must for your OEM application by incorporating analog and digital drive electronics to provide a smaller footprint at a reduced cost. Our unique design allows us to customize the laser beam parameters to simplify your optical system design requirements, giving you flexibility to focus on your core competencies. Controlling the laser has never been easier, now with a USB interface, full control of the CRN and CFS series laser is a simple connection away. For those applications that need an end user interface, an optional external controller box is available for CDRH compliance requirements.

- Excellent power and beam pointing stability
- Low noise operation
- Wide thermal operating range
- Excellent high speed analog and digital modulation
- Internal controller
- Fiber coupled and free space versions
- Available accessories: CDRH Remote Control Box (Part Number 56RLC100)

Features

Power Stability:
Free Space: ± 1%
Fiber Coupled: ± 2%

Amplitude Noise
Free Space: ± 0.1% rms
Fiber Coupled: ± 0.2% rms

Pointing Stability:
Free Space: < 5µrad / ° C
Fiber Coupled: N/A

Power Consumption: < 15 W

Communications: USB

Fiber Coupled only:
Fiber Type: Single Mode
Fiber Termination: FC/APC
Fiber Length Nominal (m): 1
Typical NA: 0.12

Standard Products

λ (nm)	Power (mW)	Beam Diameter (1/e²) Nominal (mm)	Far Field Beam Divergence (1/e²) Nominal (mrad)	PART NUMBER
Free Space				
405 ± 5	100	0.80 ± 0.25	<1.3	56-CRN-405-100
445 ± 5	40	0.70 ± 0.18	<1.5	56-CRN-445-040
488 ± 5	50	0.76 ± 0.24	<1.8	56-CRN-488-050
515 ± 5	60	0.66 ± 0.22	<2.1	56-CRN-515-060
642 ± 5	100	0.92 ± 0.34	<2.2	56-CRN-642-100
Fiber Coupled				
405 ± 5	50	0.80 ± 0.25	<1.3	57-CFS-405-050
445 ± 5	25	0.70 ± 0.18	<1.5	57-CFS-445-025
488 ± 5	50	0.76 ± 0.24	<1.8	57-CFS-488-050
515 ± 5	25	0.66 ± 0.22	<2.1	57-CFS-515-025
642 ± 5	50	0.92 ± 0.34	<2.2	57-CFS-642-050

IDEX OPTICS & PHOTONICS MARKETPLACE

DPSS LASERS

Melles Griot DPSS lasers provide compact and reliable laser light with a low thermal footprint and maximum resistance to mechanical shock and vibration. These lasers feature a compact laser head with excellent output power and pointing stability. This is achieved through state-of-the art thermal management and current control, which improves performance and reliability in harsh environments. In addition to free space beam delivery, fiber optic beam delivery is also available for most products.

SELECTION GUIDE 310

BLUE: BDD SERIES 488 nm DPSS LASER 311

GREEN: GCA SERIES 532 nm DPSS LASERS 312

YELLOW: YCA SERIES 561 nm DPSS LASERS 313

SELECTION GUIDE

Product Type	Wavelength	Page
BLUE: BDD SERIES	488 nm	311
GREEN: GCA SERIES	532 nm	312
YELLOW: YCA SERIES	561 nm	313

IDEX OPTICS & PHOTONICS MARKETPLACE

MELLES GRIOT

BDD BLUE DPSS LASERS: 488 nm

The 85-BDD is available with up to 50 mW of output power and features automatic power control (APC) for excellent power stability. The 85-BDD series can be used as a direct replacement for air-cooled argon-ion lasers in many bioanalytical and medical applications (e.g., flow cytometry, confocal microscopy, DNA analysis), thereby reducing power consumption from 1000 W to less than 15 W, vastly simplifying thermal management, and increasing system life.

- Up to 50 mW
- Automatic power control (APC)
- Excellent beam quality ($M^2 < 1.2$)
- Low-noise output: rms: <0.5%, 20 Hz to 1 MHz (typical) <0.75%; (maximum) peak-to-peak: <1%, 20 Hz to 20 kHz
- Stable operation at baseplate temperatures from +10°C to +50°C
- Highly reliable solid-state design for long life-time
- Minimal heat-sinking requirements

Features

Product Code: BDD

Output Power: Available up to 50 mW

Power Stability: As low as ± 2%

Power Consumption: As low as 15 W

Power Feedback Mode: Automatic Power Control or Constant Current

Communications: RS-232 interface

Regulatory Approvals: CDRH, IEC and CE compliant

Standard Product

λ (nm)	Power (mW)	Beam Diameter (1/e²) Nominal (mm)	Far Field Beam Divergence (1/e²) Nominal (mrad)	PART NUMBER
BDD				
488 ± 0.5	20	0.7 ±0.05	1.2	85-BDD-020

MELLES GRIOT

GCA GREEN DPSS LASERS: 532 nm

The GCA series of green DPSS lasers deliver diffraction-limited, TEM_{00} output from a compact, self-contained package that includes drive electronics and thermoelectric cooling. Automatic power control provides excellent power stability over a broad operating temperature range, and the highly efficient electronics require only 10 W at 5 Vdc input. These lasers are ideal for spectroscopy, laser-induced fluorescence, medical diagnostics, alignment, and a wide variety of testing applications.

Systems are available in research and ultra-compact OEM configurations with a variety of standard and custom beam-delivery systems.

- Up to 20 mW
- Stable output from 10°C to 40°C
- Highly reliable solid-state design for long life-time
- Excellent beam quality (M^2 <1.2)
- Low power consumption
- Interface for remote monitoring and operation
- Integrated laser controller

Features

Product Code: GCA

Output Power: 20 mW

Power Stability: As low as ± 2%

Power Consumption: < 10 W

Power Feedback Mode: Automatic Power Control

Communications: Interface for remote monitoring and operation

Regulatory Approvals: CDRH, IEC and CE compliant

Optical Noise: <3% Peak to Peak (20Hz to 2MHz)

Standard Product

λ (nm)	Power (mW)	Beam Diameter (1/e²) Nominal (mm)	Far Field Beam Divergence (1/e²) Nominal (mrad)	PART NUMBER
GCA				
532 ± 1.0	20	1.1 ±0.2	1.3	85-GCA-020

IDEX OPTICS & PHOTONICS MARKETPLACE

MELLES GRIOT

YCA YELLOW DPSS LASERS: 561 nm

YCA series yellow DPSS lasers provide up to 50 mW at 561 nm, with excellent stability over a wide operating temperature range. Their wavelength make them ideally suited for bio-fluorescent dyes and as a highly reliable direct replacement for krypton-argon and many green lasers. The excellent beam quality, narrow linewidth, and low optical noise of YCA series lasers are ideal for confocal microscopy, metrology, spectroscopy, medical diagnostics, fluorescence, and interferometric applications. The small size, low power consumption, minimal heat-sinking requirements, and RS-232 control and monitoring interface are particularly suitable for compact, self-contained systems for OEM applications.

- Single longitudinal mode
- <0.5% rms noise (20 Hz to 2 MHz)
- Stable output from 15°C to 35°C
- Low power consumption
- Excellent beam quality (M^2 <1.2)
- 0.67 mm beam diameter for easy retrofit from krypton ion lasers
- Lightweight and compact

Features

Product Code: YCA

Output Power: Available up to 50 mW

Power Stability: As low as ± 2.5%

Power Consumption: < 30 W

Power Feedback Mode: Automatic Power Control or Constant Current Mode

Communications: RS-232 computer interface or analog

Regulatory Approvals: CDRH, IEC and CE compliant

Standard Product

λ (nm)	Power (mW)	Beam Diameter (1/e²) Nominal (mm)	Far Field Beam Divergence (1/e²) Nominal (mrad)	PART NUMBER
YCA				
561 ± 0.5	20	0.67 ± 0.05	1.2	85-YCA-020

APPENDIX & INDICES

OPTICAL SPECIFICATIONS A240

INDEX OF REFRACTION A242

DISPERSION EQUATIONS A244

SURFACE QUALITY & SURFACE FIGURE A246

LASER INDUCED DAMAGE THRESHOLD A247

RADIUS OF CURVATURE A248

STANDARD SIZE CODES AND RADII OF CURVATURE A249

MARKING A250

GENERAL PRODUCT INDEX A251

PRODUCT CODE INDEX A252

TECHNICAL GUIDE INDEX A254

OPTICAL SPECIFICATIONS

SUBSTRATE MATERIAL

The material from which an optic is made.

The most common materials are N-BK7, UV grade fused silica, MgF_2, and CaF_2. CVI Laser Optics has experience with a wide variety of glasses, fused silicas, and crystalline materials.

SURFACE FIGURE

The deviation from the ideal surface.

CVI Laser Optics specifies surface figure in terms of waves peak-to-valley (p-v) at 633 nm, prior to coating. The peak-to-valley specification is more stringent than an RMS or average surface specification and assures high quality parts for all applications. We manufacture flats to λ/20 and spherical surfaces to λ/10 accuracy on a routine basis. A coated surface figure may also be specified.

COSMETIC SURFACE QUALITY

Surface quality describes a level of defects visually detected on the surface of an optical component.

100% visual inspection is performed on all optics. Surface quality becomes critically important in high energy laser applications or where scatter must be reduced for better signal to noise performance.

MIL-PRF-13830B

This inspection criteria was adopted in 1997.The first number denotes the size and concentration of scratches as compared to a known NIST standard. The second number defines the largest pit by its diameter in hundredths of millimeters. For example: 10 dig = ½ (Length of dig =Width of dig) = 0.1 mm diameter.

CVI LASER OPTICS LASER QUALITY

We have extensive experience in delivering high laser damage threshold optics and have developed a proprietary inspection method to consistently meet our customers' laser induced damage requirements. This proprietary inspection method utilizes significantly brighter light sources than those specified in MIL-PRF-13830B.

CVI Laser Optics also utilizes magnification when required to detect scratches, digs and other defects.

LASER GRADE

Laser grade is the highest level of inspection criteria in the optics industry.

Laser grade optics are virtually defect-free. High power magnification is used to detect and measure defects.

WEDGE

The angle between the two surfaces of an optical element.

This can also be expressed as the difference in edge thickness around the part, for example a 25.4 mm diameter optic with an edge thickness variation (ETV) of 0.025 mm has a wedge of 3.44 minutes of arc.

RADIUS OF CURVATURE

The radius of the sphere coincident with the optical surface.

A flat has radius of curvature equal to infinity.The reciprocal of the radius is called the curvature of the surface. CVI Laser Optics can manufacture a wide range of curvatures using its existing tooling and test plates and has the capability to make new test plates if required.

CVI Laser Optics's standard radius tolerance is 80.5% and 80.1% is available for selected radii.

CONCENTRICITY/CENTRATION

The deviation between the optical and mechanical axes of a lens.

Concentricity error is the measured maximum edge thickness variation. CVI Laser Optics's standard concentricity is ≤ 0.05 mm edge thickness variation and the standard centration error is ≤ 3 arc minutes.

CLEAR APERTURE

The central area over which the optical specifications apply.

CVI Laser Optics specifies clear aperture in terms of the diameter or linear dimensions of this central area.

IDEX OPTICS & PHOTONICS MARKETPLACE

ANGLE AND PLANE OF INCIDENCE

The angle formed between the normal to the optical surface and the incident ray.

An incidence angle of zero degrees is referred to as normal incidence.The plane of incidence is the plane containing the incident ray and the normal.

POLARIZATION

The orientation and phase shift of the electric field when resolved into components parallel and perpendicular to the plane of incidence.

Light that is *p*-polarized has the electric field polarized parallel to the plane of incidence. Light that is *s*-polarized has the electric field polarized perpendicular to the plane of incidence. UNP refers to unpolarized light, which is a random mixture of equal amounts of *s*- and *p*-polarization states. Specify the polarization state whenever ordering an optic for use at non-normal incidence angle.

ULTRAVIOLET AND VISIBLE MATERIALS

Ultraviolet Materials

Wavelength (nm)	MgF_2 η_e	MgF_2 η_o	CaF_2	Sapphire η_e	Sapphire η_o	Crystal Quartz η_e	Crystal Quartz η_o	Fused Silica
193	1.44127	1.42767	1.50153	1.91743	1.92879	1.67455	1.66091	1.56077
213	1.42933	1.41606	1.48544	1.87839	1.88903	1.64452	1.63224	1.53539
222	1.42522	1.41208	1.47996	1.86504	1.87540	1.63427	1.62238	1.52669
226	1.42358	1.41049	1.47779	1.85991	1.87017	1.63033	1.61859	1.52335
244	1.41735	1.40447	1.46957	1.84075	1.85059	1.61562	1.60439	1.51086
248	1.41618	1.40334	1.46803	1.83719	1.84696	1.61289	1.60175	1.50855
257	1.41377	1.40102	1.46488	1.82972	1.83932	1.60714	1.59620	1.50368
266	1.41164	1.39896	1.46209	1.82358	1.83304	1.60242	1.59164	1.49968
280	1.40877	1.39620	1.45836	1.81509	1.82437	1.59589	1.58533	1.49416
308	1.40429	1.39188	1.45255	1.80198	1.81096	1.58577	1.57556	1.48564
325	1.40216	1.38983	1.44981	1.79582	1.80467	1.58102	1.57097	1.48164
337	1.40086	1.38859	1.44814	1.79206	1.80082	1.57812	1.56817	1.47919
351	1.39952	1.38730	1.44642	1.78825	1.79693	1.57518	1.56533	1.47672
355	1.39917	1.38696	1.44597	1.78732	1.79598	1.57446	1.56463	1.47612

Visible Materials

Wavelength (nm)	Schott N-BK7	Schott N-F2	Schott N-SF2	Schott N-SF10	Schott N-SF11	Schott N-BaK4	Crystal Quartz η_e	Crystal Quartz η_o	Fused Silica
400	1.53085	1.65243	1.68453	1.77826	1.84542	1.58695	1.56730	1.55772	1.47012
442	1.52607	1.64063	1.67098	1.75964	1.82254	1.58069	1.56266	1.55324	1.46622
458	1.52461	1.63718	1.66704	1.75428	1.81602	1.57879	1.56119	1.55181	1.46498
488	1.52224	1.63178	1.66091	1.74597	1.80595	1.57574	1.55885	1.54955	1.46301
515	1.52046	1.62783	1.65644	1.73996	1.79871	1.57346	1.55711	1.54787	1.46156
532	1.51947	1.62569	1.65403	1.73672	1.79482	1.57220	1.55610	1.54690	1.46071
590	1.51670	1.61984	1.64746	1.72797	1.78435	1.56870	1.55333	1.54421	1.45838
633	1.51508	1.61656	1.64378	1.72312	1.77858	1.56669	1.55171	1.54264	1.45702
670	1.51391	1.61424	1.64119	1.71971	1.77454	1.56524	1.55051	1.54148	1.45601
694	1.51323	1.61293	1.63973	1.71780	1.77228	1.56441	1.54981	1.54080	1.45542
755	1.51172	1.61010	1.63659	1.71374	1.76749	1.56260	1.54827	1.53932	1.45414
780	1.51118	1.60911	1.63550	1.71233	1.76583	1.56196	1.54771	1.53878	1.45367
800	1.51078	1.60838	1.63469	1.71130	1.76462	1.56148	1.54729	1.53837	1.45332
820	1.51039	1.60770	1.63394	1.71033	1.76349	1.56102	1.54688	1.53798	1.45298
860	1.50966	1.60644	1.63256	1.70858	1.76144	1.56018	1.54612	1.53724	1.45234
980	1.50779	1.60335	1.62919	1.70438	1.75655	1.55807	1.54409	1.53531	1.45067
1064	1.50663	1.60159	1.62730	1.70207	1.75390	1.55682	1.54282	1.53410	1.44963
1320	1.50346	1.59723	1.62268	1.69667	1.74776	1.55358	1.53922	1.53068	1.44669
1550	1.50065	1.59380	1.61914	1.69275	1.74340	1.55087	1.53596	1.52761	1.44402
2010	1.49435	1.58680	1.61204	1.68531	1.73528	1.54507	1.52863	1.52073	1.43794

IDEX OPTICS & PHOTONICS MARKETPLACE

INFRARED MATERIALS

Infrared Materials

Wavelegnth (nm)	Zinc Selenide (ZnSe)	Calcium Fluoride (CaF_2)	Germanium (Ge)	Silicon (Si)
0.6328	2.590	1.43289	5.3900	3.9200
1.40	2.461	1.42673	4.3400	3.4900
1.50	2.458	1.42626	4.3500	3.4800
1.66	2.454	1.42551	4.3300	3.4700
1.82	2.449	1.42475	4.2900	3.4600
2.05	2.446	1.42360	4.2500	3.4500
2.06	2.446	1.42355	4.2400	3.4900
2.15	2.444	1.42308	4.2400	3.4700
2.44	2.442	1.42146	4.0700	3.4700
2.50	2.441	1.42110	4.2200	3.4400
2.58	2.440	1.42062	4.0600	3.4364
2.75	2.439	1.41954	4.0526	3.4335
3.00	2.438	1.41785	4.0540	3.4307
3.42	2.436	1.41469	4.0370	3.4277
3.50	2.435	1.41404	4.0356	3.4272
4.36	2.432	1.40609	4.0227	3.4223
5.00	2.430	1.39896	4.0177	3.4203
6.00	2.426	1.38560	4.0138	3.4188
6.24	2.425	1.38197	4.0100	3.4185
7.50	2.420	1.36000	4.0095	3.4171
8.66	2.414	1.33504	4.0071	3.4161
9.50	2.410	1.31375	4.0064	3.4158
9.72	2.409	1.30768	4.0062	3.4155
10.60	2.400	1.28116	4.0058	3.4155
11.00	2.400	1.26783	4.0059	3.4155
11.04	2.400	1.26645	4.0059	3.4155
12.50	2.390	1.20951	4.0000	3.4155
13.02	2.385	1.18573	4.0000	3.4155
13.50	2.380	1.16187	4.0000	3.4155
15.00	2.370	1.07290	4.0000	3.4155
16.00	2.360	0.99783	4.0000	3.4155
16.90	2.350	0.91507	4.0000	3.4155
17.80	2.340	0.81173	4.0000	3.4155
18.60	2.330	0.69336	4.0000	3.4155
19.30	2.320	0.55456	4.0000	3.4155
20.00	2.310	0.34029	4.0000	3.4155

DISPERSION EQUATIONS

DISPERSION EQUATIONS FOR OPTICAL MATERIALS

Typically either a Sellmeier or Laurent series equation is used to describe glass dispersion.

SELLMEIER SERIES EQUATION

The Sellmeier series equation is:

$$\eta^2 = 1 + \frac{B_1\lambda^2}{\lambda^2 - C_1} + \frac{B_2\lambda^2}{\lambda^2 - C_2} + \frac{B_3\lambda^2}{\lambda^2 - C_3}$$

where the wavelength, λ, is expressed in μm.

Dispersion Equation Constants - Sellmeier series equation

	B_1	B_2	B_3	C_1	C_2	C_3
MgF_2 η_e	4.13440230E-01	5.04974990E-01	2.49048620E+00	1.35737865E-03	8.23767167E-03	5.65107755E+02
MgF_2 η_o	4.87551080E-01	3.98750310E-01	2.31203530E+00	1.88217800E-03	8.95188847E-03	5.66135591E+02
Sapphire η_e	1.50397590E+00	5.50691410E-01	6.59273790E+00	5.48041129E-03	1.47994281E-02	4.02895140E+02
Sapphire η_o	1.43134930E+00	6.50547130E-01	5.34140210E+000	5.27992610E-03	1.42382647E-02	3.25017834E+02
CaF_2	5.67588800E-01	4.71091400E-01	3.84847230E+00	2.52642999E-03	1.00783328E-02	1.20055597E+03
Fused Silica	6.96166300E-01	4.07942600E-01	8.97479400E-01	4.67914826E-03	1.35120631E-02	9.79340025E+01
Schott N-BK7	1.03961212E+00	2.31792344E-01	1.01046945E+00	6.00069867E-03	2.00179144E-02	1.03560653E+02
Schott F2	1.34533359E+00	2.09073118E-01	9.37357162E-01	9.97743871E-03	4.70450767E-02	1.11886764E+02
Schott N-F2	1.39757037E+00	1.59201403E-01	1.26865430E+00	9.95906143E-03	5.46931752E-02	1.19248346E+02
Schott SF2	1.40301821E+00	2.09073176E-01	9.39056586E-01	1.05795466E-02	4.93226978E-02	1.12405955E+02
Schott N-SF2	1.47343127E+00	1.63681849E-01	1.36920899E+00	1.09019098E-02	5.85683687E-02	1.27404933E+02
Schott SF5	1.46141885E+00	2.47713019E-01	9.49995832E-01	1.11826126E-02	5.08594669E-02	1.12041888E+02
Schott N-SF5	1.52481889E+00	1.87085527E-01	1.42729015E+00	1.1254756E-02	5.88995392E-02	1.29141675E+02
Schott SF10	1.61625977E+00	2.59229334E-01	1.07762317E+00	1.27534559E-02	5.81983954E-02	1.16607680E+02
Schott N-SF10	1.62153902E+00	2.56287842E-01	1.64447552E+00	1.22241457E-02	5.95736775E-02	1.47468793E+02
Schott SF11	1.73848403E+00	3.11168974E-01	1.17490871E+00	1.36068604E-02	6.15960463E-02	1.21922711E+02
Schott N-SF11	1.73759695E+00	3.13747346E-01	1.89878101E+00	1.13188707E-02	6.23068142E-02	1.55236290E+02
Schott N-SK11	1.17963631E+00	2.29817295E-01	9.35789652E-01	6.80282081E-03	2.19737205E-02	1.01513232E+02
Schott N-BaK1	1.12365662E+00	3.09276848E-01	8.81511957E-01	6.44742752E-03	2.22284402E-02	1.07297751E+02
Schott N-BaK4	1.28834642E+00	1.32817724E-01	9.45395373E-01	7.79980626E-03	3.15631177E-02	1.05965875E+02

IDEX OPTICS & PHOTONICS MARKETPLACE

LAURENT SERIES EQUATION

The Laurent series equation is:

$$\eta^2 = A_0 + A_1\lambda^2 + \frac{A_2}{\lambda^2} + \frac{A_3}{\lambda^4} + \frac{A_4}{\lambda^6} + \frac{A_5}{\lambda^8}$$

where the wavelength, λ, is expressed in µm.

Dispersion Equation Constants - Laurent series equation

	A_0	A_1	A_2	A_3	A_4	A_5
Crystal Quartz η_e	2.38490000E+00	-1.25900000E-02	1.07900000E-02	1.65180000E-04	-1.94741000E-06	9.36476000E-08
Crystal Quartz η_o	2.35728000E+00	-1.17000000E-02	1.05400000E-02	1.34143000E-04	-4.45368000E-07	5.92362000E-08

SURFACE QUALITY & SURFACE FIGURE

SURFACE QUALITY

Scratch-Dig	Relative Cost	Applications
60-40	Very Low	Used in low power laser and imaging applications where scattered light is not as critical as cost.
40-20	Low	For laser and imaging applications with focused beams that tolerate little scattered light.
20-10	Moderate	For laser and imaging applications with focused beams where minimizing scattered light is more critical. Best quality offered by typical catalog houses.
20-10 CVI LQ	Moderate	CVI Laser Quality level of inspection. For laser and imaging applications with focused beams where minimizing scattered light is more critical.
10-15 CVI LQ	Moderately High	CVI Laser Quality level of inspection. Required for high damage threshold in high laser energy applications. Best performance for laser material processing applications and laser cavity optics.

SURFACE FIGURE/TRANSMITTED WAVEFRONT DISTORTION

Surface Quality	Relative Cost	Applications
λ/2	Very Low	Cost optimization solution. Also used with very fast or short radius singlets.
λ /4	Low	For general laser and imaging applications where wavefront performance is balanced with cost.
λ/8	Moderate	For laser and imaging applications with low wavefront distortion requirements, especially in multi-element systems. Best quality offered by typical catalog houses.
λ /10	Moderate High	CVI Laser Optics signature wavefront quality level. Required for best performance in ultraviolet and performance critical applications

LASER INDUCED DAMAGE THRESHOLD

LASER INDUCED DAMAGE THRESHOLD

Typical Laser Induced Damage Threshold Data

1064 nm, 20 NSEC, 20 HZ DATA

- Antireflection coatings on fused silica > 15 J/cm^2
- Antireflection coatings on N-BK7 > 10 J/cm^2
- Antireflection coatings on N-SF11 > 4 J/cm^2
- Optical Cement > 2 J/cm^2
- High reflection coatings > 20 J/cm^2

For higher damage thresholds call CVI Laser Optics to optimize the various material parameters and provide certification. CVI Laser Optics is a leader in damage resistant coatings for excimer and other high energy lasers.

UV DATA

- Antireflection coatings on fused silica
- 193 nm > 2 J/cm^2, 20 nsec, 20 Hz
- 266 nm, 355 nm > 5 J/cm^2, 10 nsec, 10 Hz

LASER INDUCED DAMAGE THRESHOLD TESTING

LIDT (Laser Induced Damage Threshold) is defined as any laser-induced permanent change which is observable at high magnification at the lowest power sufficient to induce damage at any test site. LIDT depends on test wavelength, pulse width, repetition rate, and inspection method.

To determine the damage threshold, CVI Laser Optics tests a number of samples at varied settings using increasing power. Visible observation is performed using a 20x microscope immediately before and after the optic is subjected to the laser. The test samples are then characterized for laser induced damage and any changes in beam scatter are documented. LIDT test procedures are subject to change, and can be changed upon the request of a customer.

The two main mechanisms that cause laser damage to an optical coating are dielectric breakdown and thermal absorption. Factors which significantly reduce the LIDT are scratches, pores, inclusions, and impurities.

RADIUS OF CURVATURE

For short radius lenses, spherical aberration is the major contributor to wavefront distortion.This transition happens at or about *f*/10. CVI Laser Optics uses this as a practical limit to optimize the manufacturing process. Further improvements to surface figure do not result in measurable improvements to the overall wavefront distortion and will only increase cost. Use the charts as a guide for when spherical aberration dominates the wavefront distortion.

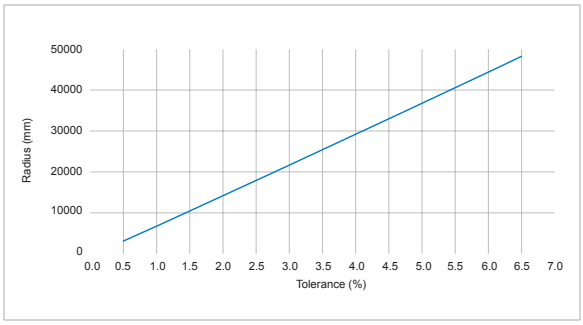

Radius vs. Tolerance

Radii Tolerance

Tolerance Radius		
%	(mm)	Explanation
0.5	3500	If R ≤ 3500 mm then Radius Tolerance is 0.5%
1.0	7000	If 3501 mm ≤ R ≤ 7000 mm then Radius Tolerance is 1%
1.5	10500	If 7501 mm ≤ R ≤ 10500 mm then Radius Tolerance is 1.5%
2.0	14300	If 10501 mm ≤ R ≤ 14300 mm then Radius Tolerance is 2.0%
2.5	18000	If 14301 mm ≤ R ≤ 18000 mm then Radius Tolerance is 2.5%
3.0	21750	If 18001 mm ≤ R ≤ 21750 mm then Radius Tolerance is 3.0%
3.5	25500	If 21751 mm ≤ R ≤ 25500 mm then Radius Tolerance is 3.5%
4.0	29000	If 25501 mm ≤ R ≤ 29000 mm then Radius Tolerance is 4.0%
4.5	33000	If 29001 mm ≤ R ≤ 33000 mm then Radius Tolerance is 4.5%
5.0	37000	If 33001 mm ≤ R ≤ 37000 mm then Radius Tolerance is 5.0%
5.5	40000	If 37001 mm ≤ R ≤ 40000 mm then Radius Tolerance is 5.5%
6.0	44800	If 40001 mm ≤ R ≤ 44800 mm then Radius Tolerance is 6.0%
6.5	48800	If 44801 mm ≤ R ≤ 48800 mm then Radius Tolerance is 6.5%
–	–	Greater than 48800 mm will need special consideration.

Practical Limits to Surface Figure for Short Radius Lenses

Radius of Curvature if ≤	Diameter if ≤	Surface Figure
Spherical Lenses		
31.00 mm	12.70 mm	λ/4
75.00 mm	25.40 mm	λ/4
125.00 mm	38.10 mm	λ/4
185.00 mm	50.80 mm	λ/4
315.00 mm	76.20 mm	λ/4
Cylindrical Lenses		
31.00 mm	12.70 mm	λ
75.00 mm	15.00 mm	λ
125.00 mm	20.00 mm	λ
185.00 mm	25.40 mm	λ
315.00 mm	30.00 mm	λ

IDEX OPTICS & PHOTONICS MARKETPLACE

STANDARD SIZE CODES AND RADII OF CURVATURE

Standard Size Codes and Radii of Curvature

● Standard radius ▲ Optional radius

	Radii (m)	0525	0537	0737	1025	1037	2037	c Size Code
		0.500 in	0.500 in	0.750 in	1.000 in	1.000 in	2.000 in	c Diameter
		0.250 in	0.375 in	0.375 in	0.250 in	0.375 in	0.375 in	c Thickness
CONCAVE	0.010	▲	▲					
	0.025		▲		▲			
	0.050		▲		▲			
	0.075	●	▲		▲			
	0.10	●	▲	▲	●	▲	▲	
	0.15	●	▲		▲	▲		
	0.20	●			▲	▲		
	0.25	●	▲	▲	●	▲		
	0.30		▲		●			
	0.40					▲		
	0.50	●	▲	▲	●		●	
	0.75		▲	▲	●	▲		
	1.00	●	▲		●		●	
	1.20		▲			▲		
	1.50		▲		●	▲	●	
	2.00		▲		●	▲	●	
	3.00		▲		●	▲		
	4.00		▲			▲		
	5.00	●		▲	●	▲		
	10.0				●	▲	▲	
	20.0			▲				
CONVEX	0.30					▲		
	0.50					▲	▲	
	0.75				▲	▲	▲	
	1.00	●			●	▲	▲	
	2.00		▲		▲	▲		
	5.00					▲		
	10.0					▲		
	20.0					▲	▲	

MARKING

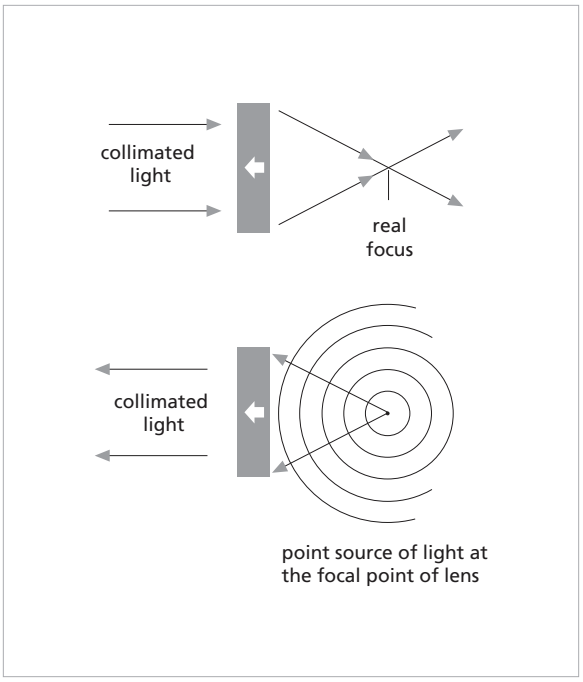

Positive Systems (Convergent): The arrow marking on the housing always points to the collimated light.

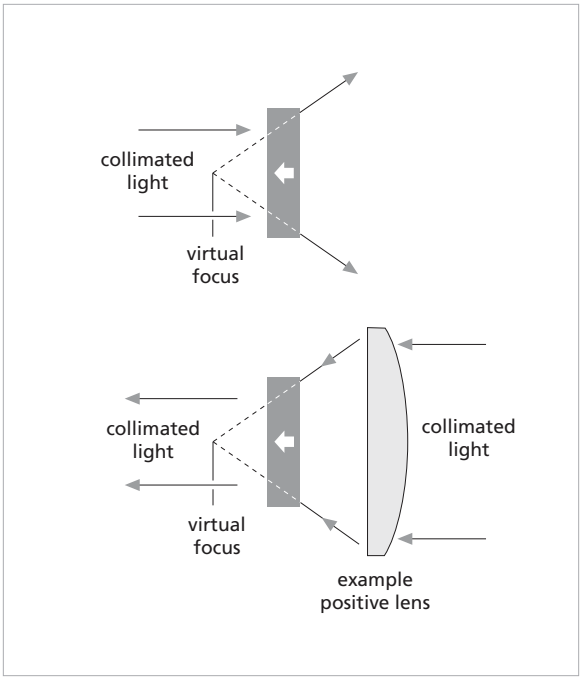

Negative Systems (Divergent): The arrow marking on the housing always points to the collimated light.

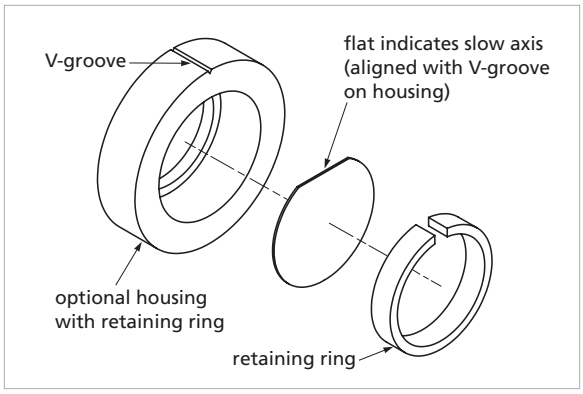

QWPM waveplate assembly

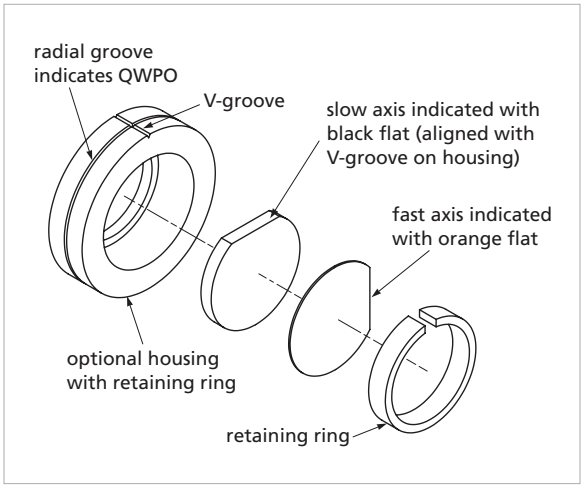

QWPO-series zero-order quartz waveplate with ring mount

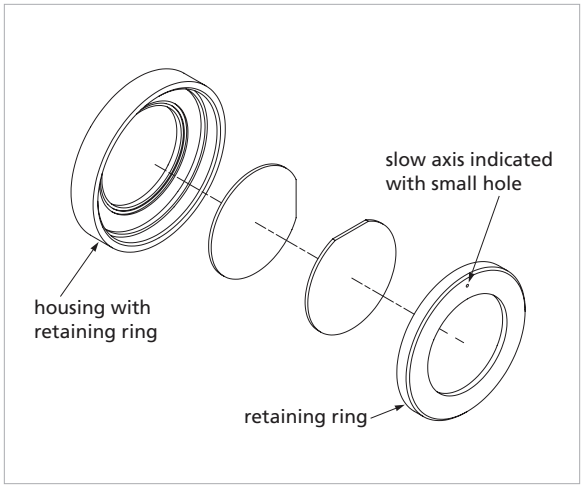

QWPO air-spaced waveplate assembly

IDEX OPTICS & PHOTONICS MARKETPLACE

GENERAL PRODUCT INDEX

90° Polarization Rotators 188, 196
Absorptive Neutral Density Filters 250-251
Achromatic lenses, Triplets 95, 97
Achromats 88, 90-98
Air-spaced Laser Doublets 88, 99,101
Air-spaced Laser Triplets 88, 95, 97
Antireflection Coated Windows 3-5
Aplanatic Meniscus Lenses 88, 100-106
Aplanats 88, 99-104
Aspheric Glass Condenser Lenses 24, 60
Bandpass Interference Filters 232-236, 239
Beam Expanders 89, 109-112
Beamsplitter Cubes 177-185
Beamsplitters Non-Polarizing 176-177
Beamsplitters Plates 164-176
Bestform Lenses 24, 59
Bi-Concave Spherical Lenses 24, 56-58
Bi-Convex Spherical Lenses 24, 41-47
Broadband Hybrid Cube Beamsplitters 184-185
Calcium Fluoride (CaF_2) lenses 39
Cemented Doublets 88, 90-94, 103
Collimation Testers 113
Color Glass Filters 246-247
Compound Zero-Order Quartz Waveplates 188, 192
Condenser Lenses, Aspheric 24,60
Continuously Variable Beamsplitters 186
Cylindrical Lenses 63-85
Diode Laser Glass Doublets 103
Diode Laser Objective Lenses 105
Doublets 88, 90-94, 99, 101, 103
Dual Wavelength Beam Expanders 111
Dual-Wavelength Quartz Waveplates 188, 189
Edge Filters 240-242
Electronic Shutter Controllers 289
Electronic Shutter Mounts 287
Equilateral Dispersing Prisms 20
Etalons 260-261
Excimer Laser Mirrors 122-123
Extreme Service Shutters 283
F-Theta Lenses 108
Femtosecond Beamsplitters 224-225
Femtosecond Cube Polarizer 205, 227
Femtosecond Mirrors 213-219
Femtosecond Plate Polarizer 226
Flag Shutters 265
Half-Wave plates 188, 192-193
Harmonic Separators 170-171
IES Shutters 279-280
Isosceles Brewster Prisms 21
Laser Aplanats 88, 99,101
Laser Beam Expanders 89, 109-112
Lasers - Blue 304, 305, 308, 311
Lasers - Diode 301-308
Lasers - DPSS 309-314
Lasers - Frequency Stabilized HeNe 299
Lasers - Green 295, 296, 306, 308, 312
Lasers - Helium Neon 291-299
Lasers - Linear Polarized 293, 295, 297, 299, 301-313
Lasers - Randomly Polarized 294, 296, 298
Lasers - Red 293, 294, 299, 307, 308
Lasers - Violet 303, 308
Lasers - Yellow 297, 298, 313
Long Wave Pass Dichroic Plate Beamsplitters 172-173
Long Wavepass Filters 237
Low-Dispersion Plate Polarizers 210
Metal Coated Mirrors 146-152
Metallic Neutral Density Filters 252-255
Microscope Objectives 107
Mirror Substrates 153-159
Mirrors, Broadband 137-145
Mirrors, Laser-Line 118-136
Multielement Lenses 87-113
Multiple-Order Quartz Waveplates 188, 190
Nd:YAG Laser Mirrors 124-127
Neutral Density Filters 248-257
Neutral Density High-Energy Dielectric 256-257
Non-Polarizing Beamsplitters 176-177
Notch Filters 244-245
Objective Lenses 89, 105-107
OEM Controller Board 289-290
Paddle Shutters 266
Partial Reflection Mirrors 118-119
Pellin Broca Prisms 22
Plano-Concave Cylindrical Lenses 64, 76-85
Plano-Concave Spherical Lenses 24, 48-55
Plano-Convex Cylindrical Lenses 64, 65-75
Plano-Convex Spherical Lenses 24, 25-40
Polarization Filters 243
Polarization Rotators 188, 196
Polarizing Cube Beamsplitters 199-205
Polarizing Plate Beamsplitters 206-210
Positive Bestform Lenses 24, 59
Quarter-Waveplates 188, 194
RDS Shutters 267
Retardation Plates 188-196
Right Angle Prisms 16-19
Rotary Drive Integrated Controller Shutters 270
Rotor Drive Shutter Controllers 288
Rotor Drive Shutters 263-272
Safeclose Shutters 269
Scan Lenses 108
Schott Color Glass Filters 246-247
Shear-Plate Collimation Testers 113
Short Wave Pass Dichroic Plate Beamsplitters 174-175
Short Wavepass Filters 238
Shutter Accessories 285-290
Shutter Controller Power Supply 288-290
Solenoid Shutters 277-284
Spectrophotometer Calibration Filter Sets 258-259
Spherical Lenses 23-62
Stepper Motor Shutters 273-276
Symmetric Concave Spherical Lenses 24, 56-58
Symmetric Convex Spherical Lenses 24, 41-47
Thin-Film Plate Polarizers, 45° 209
Thin-Film Plate Polarizers, 56° 206-208
Ti:Sapphire Mirrors 213-219
Ultra Thin Shutters 281
Waveplates 187-196
Wedge Windows 10-11
Window Substrates 6-11
Zero-Order Quartz Waveplates 188, 192

PRODUCT CODE INDEX

04 ESO / O4 ESC 283
04 IES 279-280
04 IPS 288-289
04 ISC 289
04 LSC 269
04 RDI 270-271
04 RDS 265-268
04 RSC 288
04 SMS 275-276
04 UTS 281-282
07 HIS 287
59 OSC 289-290
AAP 91
ABSO 186
ANG 250
ANGS 251
AM 100
APMQ 102
ARF 122-123
BBDM 137
BBS 166
BDD (26) 305
BDD (85) 311
BFPL-C 59
BFPL-UV 59
BICC-C 57
BICC-UV 58
BICX-C 43-44
BICX-UV 46-47
BS1 164-165
BSC 184-185
BSD 183
BSNP 176
BSR 170-171
BTF 168-169
BTQ 167
BXUV 109-110
CFS 258-259
CG 246-247
CLCC-C 84
CLCC-UV 85
CLCX-C 74
CLCX-UV 75
DPY 131
DUVA 147
DWBX 111
EAV 150
EDP 20
ET 260-261
F-NIR 235-236
F-UV 232
F-VIS 233-234
FABS 224-225
FLM 136
FSA 251
FSG 255
FTL 108
GCA 312
GDD 306
GLC 105-106
HAN 95-96
HAP 95-96
HEBX 109-110
HM 129
HPDA 257
IB 228
IDD 304
IF-C 10
IF-UV 10
KRF 122-123
LAG-C 61
LAI 103-104
LAL 90
LAO 92-94
LAP 99-100
LAPQ 101
LBX 112
LCN-C 76
LCP-C 65
LDK-C 56
LDM 144-145
LDX-C 41-42
LGP 295
LGR 296
LHP 293
LHR 294
LL 239
LPEB 242
LPF 237
LPK-C 48-49
LPRE 240-241
LPX-C 25-27
LUD-UV 45
LUK-UV 52
LUP-UV 32-33
LW-C 11
LW-UV 11
LWP 172-173
LYP 297
LYR 298
MPQ 140-143
NCBS 177
ND 252-253
NDQ 252-253
NDQS 255
NDS 255
NP 244-245
OAS 107
P180 18-19
P90 18-19
PAUV 148
PAV 149
PBP 243
PBS 179, 201
PBSH 182, 204
PBSI 181, 203
PBSK 205, 227
PBSO 180, 202
PG 152
PLBC 22
PLCC-C 50-51
PLCC-SF11 55
PLCC-UV 53-54
PLCX-C 28-31
PLCX-CFUV 39
PLCX-EUV 38
PLCX-SF11 40
PLCX-UV 34-37
PM-C 156

PM-UV 157
PR1 118-119
PS 151
PW1-C 6-7
PW1-UV 6-7
QWPD 189
QWPM 190-191
QWPO 192-195
RAP-C 17
RAP-UV 17
RCC-C 77
RCC-UV 78-79
RCX-C 66-67
RCX-UV 68-69
RDD 307
RM-UV 159
RT 196
RW-C 9
RW-UV 9
SCC-C 80-81
SCC-UV 82-83
SCX-C 70-71
SCX-UV 72-73
SMCC-C 155
SMCC-UV 155
SMCX-UV 153
SPF 238
SPM 113
SQM-C 158
SQM-UV 158
SQW-C 8
SQW-UV 8
STP 299
SWP 174-175
TFP 206-207
TFPI 208
TFPK 210
TFPN 209
TLM1 120-121, 216-217
TLM2 138-139, 218-219
TLMB 134-135, 214-215
TLMW 213
UPBS 178, 200
UVDA 256
VAUV 146
VDD 303
W1 3-5
W2 3-5
Y1 124-125, 211
Y13 127
Y1S 128
Y2 124-125, 220
Y2S 128
Y3 124-125
Y3S 128
Y4 126
Y4S 128
Y5 127
YAN 97-98
YAP 97-98
YCA 313
YH 130
YL1 132-133
YL2 132-133
YL3 132-133
YL4 132-133
YL5 132-133

TECHNICAL GUIDE INDEX

A

Aberration Astigmatism A107, A108
- Balancing A122, A123
- Chromatic A109
- Coma A107, A108
- Distortion A108
- Field Curvature A108
- Lateral Color A109
- Lens Shape A111
- Longitudinal Spherical A106, A107
- Performance Factors A105 - 110
- Seidel A106, A107
- Spherical A106, A107, A186
- Wavefront A105 - 110

Absentee Layer A18

Absorption A47

Absorptive Neutral-Density Filters A54

Amorphous Phase A14

Amplification A198 - 201

Amplitude Fluctuations A213, A214

Angle Shift A51

Antireflection Coatings A12-19
- Multilayer
  - Absentee Layer A18
  - Broadband Antireflection Coatings A18
  - Quarter/Quarter Coating A17
  - Two-Layer Coatings A17-18
  - V-Coatings A18, A35, A36
- Single-Layer
  - Angle of Incidence A14
  - Coating Formulas A14
  - Coated Surface Reflectance
    - at Normal Incidence A15, A16
    - Oblique Incidence A15, A16
  - Film Thickness A12
  - Magnesium Fluoride A37
  - Refractive Index A12
  - Wavelength Dependence A14

Aperture
see Fundamental Optics

Argon Ion Laser
see Lasers, Argon Ion

Automatic Power Control A213, A214

Average Reflectance A16

B

B270 A73

BaK1 (N-BaK1) A71, A72

Beam Profile, Gaussian A158 - 162, 203 - 207

Beam Propagation A158 - 162

Beam Waist A158 - 162, A203 - 205

Beam Waist Location A204 - 205

Beams
- Reflected A7
- Transmitted A7-10

Birefringence A140

BK7 (N-BK7) A63

Bohr Atom A198 - 200

Brewster's Angle A8

Broadband Antireflection Coatings
see Antireflection Coatings, Multilayer, Broadband

C

CaF2 A65

Calcite
- Laser Grade A142
- Optical Grade A142
- Optical Material Properties A70
- Scatter A141
- Spectral Properties A141
- Wavefront Distortion A141

Calcium Fluoride A65

Camera
- Analog A175
- CCD A192
- Color A192
- Digital A175
- Formats A178, A192, A193
- High-Resolution A193
- Interface
  - Analog A192
  - Digital A192
- Line-Scan A192
- Remote-Head A192
- Sensor
  - Charge-Coupled Device (CCD) A192
  - Complementary Metal-Oxide Semiconductor (CMOS) A192

Carbon Dioxide Laser
See Lasers, Carbon Dioxide

Cemented Interface A90

Centration A85

Centration Error A85

Chemical Characteristics A58

Chief Ray A178 - 182

Climatic Resistance A61

Coated Surface Reflectance
- Normal Incidence A15
- Oblique Incidence A15, A16

Coating
- Antireflection
  see Antireflection Coatings
- Bare Gold (PG-BARE) A38, A42
- Broadband A22
- Broadband Antireflection (BBAR) A29 - 36
- Cold Mirrors A23
- Damage Threshold A55, A195
- Deep UV Aluminum A38, A39
- Design A12-22
- Dispersion Formula A14
- Double-V Antireflection A36
- Enhanced Aluminum (EAV) A38, A41
- Formulas A14
- HEBBAR™ A29 - 32
- High-Reflection A20 -24
- Hot Mirrors A23
- Interference, Theory of A9-11
- Intrinsic Stress A28
- Ion Assisted A26, A202
- Layer A27
- Magnesium Fluoride A37
- Materials A25 - 42
- MAXBRIte™ A43, 44
- MAX-R™ A45
- Metallic A23, A24, A38 - 42, A53 , 54
- Multilayer A17 - 19
- Partially Transmitting A23, A24
- Protected Aluminum (PAV) A38, A40
- Protected Gold (PG) A38, A42
- Protected Silver (PS) A38, A41
- Quarter/Quarter A17

IDEX OPTICS & PHOTONICS MARKETPLACE

Quarterwave Stack A22
Reflectance, Theory of A7-10
Scattering A20, A21, A27
Single-Layer MgF2 A37
Thickness A10, A11
Thin-Film A25 - 28
Triple-V Antireflection A36
Ultrafast Coating (TLMB) A46
Ultraviolet Protected Aluminum (PAUV) A38, A40
V-Type AR coating A35, A36
Vacuum Evaporation A25
Wavelength Dependence A14
Coating Defect A90
Coherent Light A198 - 201
Constructive Interference A10
Cosmetic Surface Quality
Bevel A90
Cemented Interface A90
Coating Defect A90
Edge Chips A90
Scratch A89
Scratch-and-Dig Designation A89, A90
Cost, Optical Materials A58
Critical Angle A9
Crown Glass A73
Crystal Quartz A69
Current Control A213, A214
Custom Machine Vision Solution
Choosing a Custom Lens A176
Design Study A177
Detailed Design A177
Identification of Requirements A177
Production A177
Prototype A177

D

Definition of Terms, Optics A124 - 126
Depth of Field (DOF) A183, A184
Destructive Interference A10
Dielectric
Boundary A7-10
Media A7
Dichroism A140, 141
Diffraction A105, A114 - 116, A183
Diffraction Effects A114 - 116
Diffraction Spot A114 - 116, A183, A184
Dig A90
Diode Lasers
see Lasers, Diode
Dispersion
Optical Materials A59, A60
Single-Layer Antireflection Coatings A14
Distortion
Pincushion A185
Wavefront A84
Divergence A203, A204
DPSS
see Lasers, Diode-Pumped Solid State
Drift A213, A215, A223

E

Edge Chips A90
Embedded Gaussian A169
Energy Level Diagram A198
Entrance Pupil A181, A182
Equivalent Vacuum Thickness A10, A11
Etalons A147 - 149
Excimer Laser
see Lasers, Excimer
Exit Pupil A181, A182
External Reflection A7, A8
External Transmittance A59
Extinction Ratio A139
Extension Tubes A181, A187

F

F2, Schott Glass Type A71, A72
Fabry-Perot Interferometer A48, A49
Fiber, Dual-Clad A230
Field Curvature A108, A109
Field of View (FOV) A178
Finesse A147 - 149
First-Order Design Theory A178 - 182
Five Schott Glass Types A71, A72
F-Number A97, A125
F-Number Image-Side A179, A180
F-Number Object-Side A179, A180
F-Number Working A180
Focal Length A124, A179
Frame Grabber A174, A175
Frequency Fluctuations A213 - 215
Frequency Stabilization A213 - 215
Fresnel
Formula A59
Laws of Reflection A8
Front-End Optics A178 - 180
Fundamental Optics
Definition of
Back Focal Length A125
Conjugate Distance A125
Depth of Field A126
Depth of Focus A126
Edge-to-Focus Distance A125
Effective Focal Length A125
First Nodal Point A125
F-Number A125
Focal Length A124
Focal Point A124
Front Focal Length A125
Magnification Power A126
Numerical Aperture A126
Primary Principal Surface A124
Primary Vertex A125
Real Image A125
Secondary Nodal Point A125
Secondary Principal Surface A125
Secondary Vertex A125
Virtual Image A12
Diffraction Effects
Circular Aperture A114, 115
Energy Distribution Table A116
Gaussian Beams A116
Slit Aperture A115, A116
Imaging Properties of Lenses
Fixed Numerical Aperture A99, A100
Numerical Aperture and Magnification A99, A100
Lens Combination Formulas
Combination Examples A101 - 104

Effective Focal Length A101
Symbols A102
Lens Combinations
Infinite Conjugate Ratio A112
Unit Conjugate Ratio A112, A113
Lens Selection
Collimating Incandescent Source A118
Coupling Incandescent Source Into Fiber A119
Diffraction-Limited Performance A120
Symmetric Fiber-to-Fiber Coupling A119, A120
Lens Shape
Coddington Shape Factor A111
Paraxial Formulas
Object at Focal Point A97
Object Inside Focal Point A96
Object Outside Focal Point A96
F-Number and Numerical Aperture A97, A98
Sign Conventions A95
Thin-Lens Approximation A95
Paraxial Lens Formulas, Air
Back Focal Length A128, A129
Front Focal Length A129
Edge-to-Focus Distance A129
Focal Length A127
Magnification or Conjugate Ratio A129
Plano Lens Radius A128
Principal-Point Locations A128
Radius of Curvature A127
Solid Angle A128
Surface Sagitta A127
Symmetric Lens Radii A127
Paraxial Lens Formulas, Arbitrary Media
Back Focal Length A125
Effective Focal Length A125
Focal Ratios A125
Front Focal Length A125
Lens Constant A129
Lens Formula (Gaussian Form) A129
Lens Formula (Newtonian Form) A130
Lens Maker's Formula A130
Magnification A130
Nodal-Point Location A130
Numerical Aperture A131
Object-to-First-Principal-Point Distance A130
Principal-Point Locations A130
Second Principal-Point-to-Image Distance A130
Separation of Nodal Points A130
Solid Angle A131
Performance Factors
Astigmatism A107, A108
Chromatic Aberration A109
Coma A107, 108
Diffraction A105
Distortion A108
Field Curvature A108
Lateral Color A109, A110
Spherical Aberration A106, A107
Fused Silica A67, A68

G

Gauging Depth of Field (GDOF) A185
Gaussian Beam Optics
Beam
Airy Disc A160, A165
Concentration A164
Depth of Focus A164, A165
Divergence A159 - 162
Far-Field A160 - 162
FWHM A159 - 162
Gaussian A159 - 162
Irradiance Profile A159 - 162
M2 Factor A158, A167, A169, A203 - 207
Magnification A163 - 165
Near-Field A160 - 162
Non-Gaussian A167
Propagation Constant A167, A168
Spatial Filtering A166
Spot Size A121
Transformation A163 - 166
Truncation A165, A166
Waist A159 - 162
Embedded Gaussian A169
Laser Modes A167
Lens Selection
Galilean Beam Expander A171
Keplerian Beam Expander A171
Rayleigh Range A162 - 164, A169, A203 - 207
Gaussian Beam Propagation A158 - 162, A203 - 207
Gaussian Beams A158 - 162, A203 - 207
Gaussian Irradiance Profile A158 - 162, A203 - 207
Germanium A80
Ghost Images A6
Glasses, High-Index A25 - 27

H

Helium Cadmium Laser
see Lasers, Helium Cadmium
Helium Neon Laser
see Lasers, Helium Neon
High-Index Material A49
High-Reflectance Coatings A20-24
Broadband A22
Cold Mirrors A23
Dielectric A7-10
Edge Filters A23
Hot Mirrors A23
Interference Filters A23
Metallic A24
Partially Transmitting A23, A24
Performance Curve A20
Polarization Effects A22
Scattering A20
Homogeneity A60

I

Image Processing A175
Image Sensor A178, A192
Image Space A178 - 180
Imaging and Machine Vision, Overview A174, A175
Imaging Properties of Lens Systems A99, A100
Incidence
Angle of A7, A14

IDEX OPTICS & PHOTONICS MARKETPLACE

Grazing A8, A9
Normal A15
Oblique A15, A16
Index of Refraction A58 - 60
Infrasil 302 A76
Intensity, Reflection of Light A7
Interference
Constructive A9, A10
Destructive A9, A10
Effects A9, A10
Thin-Film A10, A11
Interference Filters
Fabry-Perot Interferometer A48, A49
Bandpass Filter Design A49, A50
Bandpass Filter Cavities A49
Bandpass Shape A50
Wavelength Dependence on Angle of Incidence A50 -52
Angle Shift at Small Angles A50 -52
Interference Filter Orientation A52
Temperature Effects, Limits, and Thermal Shock A52
Interferometer, Fabry-Perot A48, A49
Internal Reflection A9
Ion Beam Sputtering A26
Irregularity A91

K

K-Factor A158, A165, A166
Krypton Argon Laser
see Lasers, Krypton Argon

L

Laser Acronym A198
Laser Drift A213
Laser-Induced Damage A55
Laser Noise A213
Laser Schematic Diagram A201
Lasers
Applications
Ellipsometry A233
Industrial A232
Interferometry A233
Flow Cytometry A236, A237
Marking A232, A233
Microarray Scanning A235, A236
Microscopy, Confocal A234
Non-Contact Measurement A233
Ophthalmic A237
Photolithography A232
Scribing A232, A233
Spectroscopy
Fluorescence A234, A235
Time Resolved A234
TIR A234, A235
Stereolithography A232
Surgical A237
Thin Film Measurement A233
Wafer Inspection A233
Argon Ion A218, A219
Argon/Krypton A218, A219
Beam Characteristics A203 - 207
Beam Waist A203
Beam Waist Location A203, A204
Bohr Atom A198 - A200
Carbon Dioxide A219, A220
Confocal Scanning Microscopy A234, A235
Correcting Surface A205
CO2 A219, A220
Diode
Beam Conditioning A223, A224
Fabrication Methods A222, A223
Gain Guided A221, A222
High Power A224
Index Guided A221, A222
Packaging and Reliability A224, A225
Structure A220, A221
Threshold Current A222
Wavelength Stabilization A223
Diode-Pumped Solid State
Design and Reliability A224, A225
End Pumping A226, A227
Green Noise A229
Microchip A228, A229
Side Pumping A226
Schematic A226
Wavelengths A227
Divergence A203, A204
Double-Clad Fiber A230
Drift A213
Excimer A220
Fiber A230
Four Level Pumping A201
Frequency and Amplitude Stabilization A213, A214
Frequency Stabilized A211, A212
Gas Discharge A217 - A220
Gaussian Beam Propagation A158 - 162, A203 - 207
Gaussian Beams A158 - 162, A203 - 207
Gaussian Irradiance Profile A158 - 162, A203 - 207
Ground State A198
Helium Cadmium A218
Helium Neon
General Description A218
Laser Design A218
Industrial A232
Irradiance Distribution A158 - 162, A203 - 207
Krypton
see Lasers, Argon/Krypton
Krypton Argon
see Lasers, Argon/Krypton
Lamp-Pumped A225, A226
Lithography A233, A234
M2 Measurement A158, A167, A169
Medical and Clinical A236, A237
Mixed Gas
see Lasers, Argon/Krypton
Modes Longitudinal A210, A211
Transverse A208, A209
Monochromatic Light A158 - 162, A203 - 207
Noble Gas A218, A219
Noise A213, A229
Non-Gaussian A158 - 162
Optically Pumped A225
Photons and Energy A198, A199
Polarization A214
Population Inversion A200, A201
Power Stability A213, A214

Principles, Basic Laser A198 - 201
Propagation Characteristics A158 - 162, A203 - 207
Q-switched A230
Rayleigh Range A162 - 164, A169, A203 - 207
Resonator A200, A201
Ring A211
Scientific A234
Semiconductor A220 - A225
Single Frequency A210, A211
Solid-State A225 - 228
Spontaneous Emission A199
Stereolithography A232
Tunable Operation A216
Types of A217 - 231
YAG *see Lasers, Diode-Pumped Solid State*
Wavelengths A231
LaSFN9 A71, A72
Law of Reflection A7, A8
Lead-Free Materials A63
Lens Combinations A112, A113
Lens Combination Formulas A101, A102
Lens Maker's Formula A127
Lens Materials A63
Lens Selection A118 - 120
Lens Shape A111
Lens Systems, Imaging Properties A99, A100
Lenses, Imaging
Close-Up A187
Color Corrected A186
Commercial A181, A182
Contrast A183
F-Mount A182
Macro A187
Resolution A182, A183
Standard A182, A184
Surveillance A181, A182
Telecentric A181, A182, A184, A185, A187, A194
Telephoto A181, A182
Zoom A187
Leybold SYRUSpro™ Coating System A6, A196
Light Sources A191
Lighting Backlight A190, A191
Bright-Field A190, A191
Coaxial A190, A191
Dark-Field A190, A191
Diffuse A190, A191
Fiber-Optic A189 - 191
Fluorescent A189 - 191
LED A189 - 191
Point-Like A189, A190
Solid Angle A189, A190
Strobe A191
Littrow Prism Laser Tuner A216
Lorentz-Lorenz Formulas A14
Low-Expansion Borosilicate Glass A74

M

Machine Vision
Cameras A192, A193
Frequently Asked Questions A194
Gauging A185
Lens Fundamentals A178 - 180
Lenses A181, A182, A187
Lighting A188 - 191
Optics A178, A188, A192
Software A174
Systems A174, A175
Technology A174
Telecentricity A184, A185
Video Cameras for A192, A193
Machine Vision Lens Fundamentals
First-Order Design Theory A178 - 180
Real-World Lenses A181 - 185
Magnesium Fluoride
Coating Material A12-14
Optical Material A64
Magnification A126
Marginal Rays A178 - 180
Material Properties Overview A81
Materials Calcite A70
Calcium Fluoride A65
Crystal Quartz A69
Germanium A80
Index of Refraction A58 - 60
Infrasil 302 A76
Lead-Free A63
Low-Expansion Borosilicate (LEBG) A74
Magnesium Fluoride A64
Mechanical and Chemical Properties
Acid Resistance A61
Alkali and Phosphate Resistance A61
Climatic Resistance A61
Microhardness A61
Stain Resistance A61
Optical Crown Glass A73
Optical Properties
Homogeneity A60
Refractive Index and Dispersion A59, A60
Stress Birefringence A60
Striae Grade A60
Transmission A59
Sapphire A77
Schott Glass, BaK1 (N-BaK1) A71, A72
Schott Glass, BK7 (N-BK7) A71, A72
Schott Glass, F2 A71, A72
Schott Glass, LaSFN9 A71, A72
Schott Glass, SF11 A71, A72
Silicon A79
Suprasil 1 A66
UV-grade Synthetic Fused Silica A67, A68
Thermal Characteristics A58
Thermal Expansion A58,
Transmission A59
ZERODUR® A75
Zinc Selenide A78
Mechanical and Chemical Properties, Optical Materials
Acid Resistance A61
Alkali Resistance A61
Climatic Resistance A61
Microhardness A61
Stain Resistance A61
Mechanical Characteristics, Optical Materials A61, A62
Metallic Neutral Density Filters A53, A54

IDEX OPTICS & PHOTONICS MARKETPLACE

MgF2
see Magnesium Fluoride

MgF2 Coating
see Antireflection Coatings, Single-Layer

Microhardness A61

Microscope Objectives

Choosing Objective A185, A186

Types of A186, A187

Modes

Longitudinal A210, A211

Mode Control A208, A209

Transverse A208, A209

Modulation Transfer Function A86

M-Squared (M2) Factor
A158, A167, A169, A203 - 207

M-Squared (M2) Measurement
see Beam Propagation Factor

Multilayer Antireflection Coatings A17

Absentee Layers A18-19

Broadband Antireflection Coatings A18

The Quarter/Quarter Coating A17

Two-Layer Coatings of Arbitrary Thickness A17, A18

N

N-BaK1 A71, A72

N-BK7 A63, A71, A72

Neutral Density Filters

Optical Density A53

Metallic Neutral Density Filters A53, A54

Absorptive Neutral Density Filters A54

Newton's Rings A10

Noise A213

Numerical Aperture (NA) A97, A126

O

Object Space A181, A182

Objectives

Achromats A186

Apochromats A186

Biological A186

ELWD A186

Infinity-Corrected A186

Low-Fluorescence A186

Parfocal A186

Plan Achromats A186

Plan Apochromats A186

SLWD A186

Strain-Free A186

ULWD A186

OEM and Special Coatings A56

Optical Axis, Lens A85

Optical Coatings A6

Optical Crown Glass A73

Optical Density A47, A53

Optical Specifications

Centration

Cylindrical Optics A85

Doublets and Triplets A85

Measuring A85

Optical and Mechanical Axes A85

Cosmetic Surface Quality

Bevels A90

Cemented Interfaces A90

Coating Defects A90

Digs A90

Edge Chips A90

Scratches A89

Specification Standards A89

US Military Specifications A89, A90

Modulation Transfer Function (MTF) A86

Surface Accuracy

Power and Irregularity A91

Surface Flatness A91

Wavefront Distortion Interferometer

Measurements A84

Optical Properties A59, A60

Optical Thickness A10, A11

P

Paraxial Formulas A95, A96, A127, A129

Paraxial Lens Formulas A127 - 131

Performance Factors A105 - 110

Phase Difference A9, A12, A16

Phase Shift A9, A12

Photons A198

Physical Thickness A10

Plasma Ion-Assisted Deposition (PIAD)
see Thin Film Production, Plasma Ion-Assisted Bombardment

Polarization A137 - 141

Population Inversion A200, 201

Power, Surface Accuracy A91

p-Polarized Components A16, A22

Principal-Point Locations A132

Prisms A133 - 136

Pyrex® A74

R

Rayleigh Criterion A116

Rayleigh Range A162 - 164, A169

Rays Extraordinary A14

Rays Ordinary A14

Reflection Diffuse A188

Reflection External A7, A8

Reflection Internal A9, A10

Reflection Specular A188

Reflection of Light

External Reflection A7, A8

Incidence Angle A7

Intensity A7

Interference A9-11

Internal Reflection A9

Phase Changes A9

Reflection at Dielectric Boundary

External A7,A8

Internal A9

Reflection at Uncoated Surfaces A7

Thin-Film Interference A10, A11

Refractive Index A12

Resolution
see Lenses, Imaging, Resolution

Resonator A200, A201

Retardation Plates

Achromatic A146

Dual-Wavelength A146

Half-Wave A144

Mica A145

Multiple-Order A144

Zero-Order A144, A145

Polymer A145

Quarter-Wave A144

Quartz A143 - 145
Reverse Mounting A187

S

Sapphire A77
Scattering A20, A21
Scratch A89
Scratch-and-Dig Designations A89, A90
Sensor, Technology
see Camera, Sensor
SF11 A71, A72
Shear-Plate Theory A
Silicon A79
Single-Interface Amplitude Reflectance A16
Single-Layer Antireflection Coatings A12-16
Angle of Incidence A14
Coated Surface Reflectance
at Oblique Incidence A15
Coated Surface Reflectance
at Oblique Incidence A15, A16
Coating Dispersion Formula A14
Coating Formulas A14
Film Thickness A12
Magnesium Fluoride A12-14
Refractive Index A12
Wavelength Dependence A14
Snell's Law A9, A105
Spectral Irradiance A159 - 162, A203 - 207
Spectrophotometers A28
s-Polarized Components A16, A22
Spontaneous/Stimulated Emission A199, A200
Spot Size A121
Stain Resistance A61
Stress Birefringence A60
Striae A60
Suprasil 1 A66
Surface Accuracy
Power and Irregularity A91
Surface Flatness A91
Surface Flatness A91
Surface Quality, Cosmetic A89, A90

T

Telecentricity A184, A185
Teleconverters (Extenders) A187
Thermal Expansion Coefficient A58
Thick-Lens Model A181
Thin Films A10, A11
Thin Films Deposition A25 - 28
Thin-Film Interference A10, A11
Thin-Film Production A25 - 28
Electron Bombardment A25, A26
Intrinsic Stress A28
Layer Thickness A27
Optical Monitoring A27
Plasma Ion-Assisted Bombardment A26
Production Control A28
Quality Control A28
Scattering A27
Temperature and Stress A28
Vacuum Deposition A25
Thin-Lens Model A95, A178, A179
Total Internal Reflection A9, A235
Transmission versus Wavelength A58
Transmittance A47, A59, A60
Transmitted Energy A12
Two-Layer Antireflection Coatings A17, A18

U

Ultrafast Theory A150 - 155
UV-grade Synthetic Fused Silica A67, A68

V

V-Coatings
see Antireflection Coatings, Multilayer, V-Coatings

W

Wavefront Distortion A84
Wavelength Chart A231
Wavelength Dependence on Angle of Incidence A50 -52
Waveplates A143 - 146

Y

Young's Slit Experiment A10

Z

Zerodur® A75
Zinc Selenide A78

IDEX OPTICS & PHOTONICS MARKETPLACE

ACRONYMS, ABBREVIATIONS, AND UNITS

Ω	ohm
µsec	microsecond
µW	microwatt
A	ampere
A	analog
A/D	analog to digital
ac	alternating current
ACC	Automatic Current Control
ANSI	American National Standards Institute
AO	acousto-optic
APC	automatic power control
AR	antireflection
BFL	back focal length
CA	clear aperture
CCD	charge-coupled device
CFC	chlorofluorocarbons
CIE	International Commission on Illumination (Commission Internationale del'Éclairage)
CMOS	Complementary Metal Oxide Semiconductor
CVD	chemical vapor deposition
cw	continuous wave
D	digital
dB	decibel
dc	direct current
DOF	Depth of Field
DVO	diffuse viewing only
EFL	effective focal length
EMI	electromagnetic interference
EO	electro-optic
ESD	electrostatic discharge
ESPI	electronic speckle pattern interferometry
FC	fiber coupling
ft	foot
fsec	femtosecond
FSR	free spectral range
FWHM	full width at half maximum
g	gram
GΩ	gigaohm
HEBBAR™	high-efficiency broadband antireflection
HEL	high-energy laser
HP	horizontal points
Hz	Hertz
IC	integrated circuit
IMS	integrated modular system
in.	inch
IR	infrared
ISO	International Standards Organization
kg	kilograms
kV	kilovolt
lb	pound
LCD	liquid crystal display
LED	light emitting diode
mA	milliampere
mm	millimeter
msec	millisecond
MTF	modulation transfer function
N/A	not applicable
nA	nanoampere
NA	numerical aperture
NAS	nonaspheric side
ND	neutral density
NEP	noise-equivalent power
NIST	National Institute for Science and Technology
nm	nanometer
OD	Optical Density
OD	outside diameter
OEM	original equipment manufacturer
pA	picoampere
PC	personal computer
pF	picofarad
p-p	peak-to-peak
PSD	power spectral density
QCW	quasi continuous wave
RH	relative humidity
rms	root mean square
sec	second
SPC	statistical process control
T	transmissibility
TE	thermoelectric
TEC	thermoelectric cooler
TIR	total internal reflection
TSA	transverse spherical aberration
USB	universal serial bus
UV	ultraviolet
UVGSFS	UV-grade synthetic fused silica
V	volt
Vac	volts, alternating current
Vdc	volts, direct current
W	watt
YAG	yttrium aluminum garnet

World Headquarters - USA

IDEX Optics & Photonics Marketplace
Headquarters
Albuquerque, NM
1 844 298 2550
iopmarketplace@idexcorp.com

European Offices

Didam, The Netherlands
Headquarters
+31 316 333 041
iop-benelux@idexcorp.com

Cambridge, UK
+44 (0)333 011 2302
iop-uk@idexcorp.com

Uppsala, Sweden
+46 (0) 18 12 04 00
iop-nordics@idexcorp.com

Bensheim, Germany
+49 6251 84060
iop-germany@idexcorp.com

Voisins-Le-Bretonneaux, France
+33 (0)1 30 12 06 80
iop-france @idexcorp.com

Asia Offices

Tokyo, Japan
+81 3 6912 7031
jpsales@idexcorp.com

Kyunggi-do, Rep. of Korea
+ 82 32 680 6100
iop-korea@idexcorp.com

Singapore
+ 65 6763 6633
iop-singapore@idexcorp.com

IDEX
OPTICS & PHOTONICS
MARKETPLACE

©2014 #1050 4-13