SONY CXK58257ATM/AYM -70L/85L/10L/12L -70LL/85LL/10LL/12LL

32768-word × 8-bit High Speed CMOS Static RAM

Description

CXK58257ATM/AYM is a 256K bits, 32,768 words by 8 bits, CMOS static RAM.

It is suitable for portable and battery back-up systems which require extremely small package and low stand-by current.

CXK58257ATM
28 pin TSOP (Plastic)

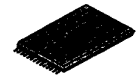

CXK58257AYM
28 pin TSOP (Plastic)

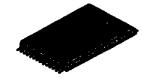

Features

- Thin Small-outline package :
  CXK58257ATM : 8mm×13.4mm 28 pin TSOP
  CXK58257AYM : 8mm×13.4mm 28 pin TSOP
  (Mirror image pinout)
- Low stand-by current :
  L-Version :
  25 μA (Max.) @Vcc = 5.5V, Ta = 0 to 70℃
  LL-Version :
  5 μA (Max.) @Vcc = 5.5V, Ta = 0 to 70℃
- Low voltage data retention : 2.0V (Min.)
- Fast access time : (Access time)
  CXK58257ATM/AYM-70L, -70LL 70ns (Max.)
  CXK58257ATM/AYM-85L, -85LL 85ns (Max.)
  CXK58257ATM/AYM-10L, -10LL 100ns (Max.)
  CXK58257ATM/AYM-12L, -12LL 120ns (Max.)
- Single +5V Supply : 5V ± 10%

Pin Description

Symbol	Description
A0 to A14	Address input
I/O1 to I/O8	Data input/output
$\overline{CE}$	Chip enable input
$\overline{WE}$	Write enable input
$\overline{OE}$	Output enable input
Vcc	+5V power supply
GND	Ground

Function

32768-word × 8-bit static RAM

Structure

Silicon gate CMOS IC

Block Diagram

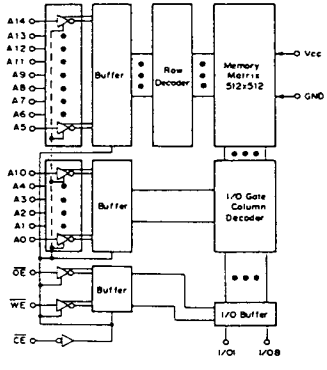

Pin Configuration

(Top View)

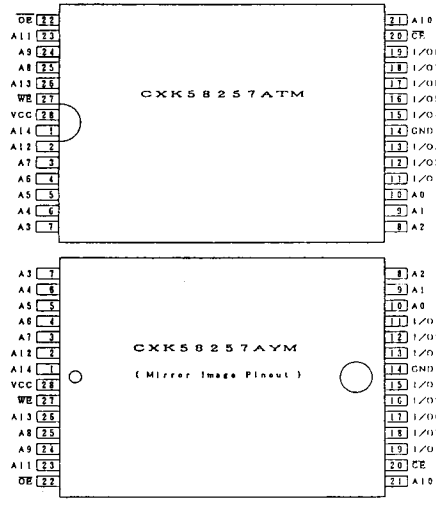

SONY reserves the right to change products and specifications without notice.
This information does not convey any license under patent rights of SONY corporation or others.

E90448 – ST

This Material Copyrighted By Its Respective Manufacturer

Absolute Maximum Ratings (Ta = 25℃, GND = 0V)

Item	Symbol	Rating	Unit
Supply voltage	V_{CC}	−0.5 to +7.0	V
Input voltage	V_{IN}	−0.5* to V_{CC} + 0.5	V
Input and output voltage	$V_{I/O}$	−0.5* to V_{CC} + 0.5	V
Allowable power dissipation	P_D	0.7	W
Operating temperature	Topr	0 to +70	℃
Storage temperature	Tstg	−55 to +150	℃
Soldering temperature	Tsolder	235 • 10	℃ • sec

* V_{IN}, $V_{I/O}$ = −3.0V Min. for pulse width less than 50ns.

Truth Table

$\overline{CE}$	$\overline{OE}$	$\overline{WE}$	Mode	I/O1 to I/O8	V_{CC} Current
H	×	×	Not selected	High Z	I_{SB1}, I_{SB2}
L	H	H	Not selected	High Z	I_{CC1}, I_{CC2}
L	L	H	Read	Data out	I_{CC1}, I_{CC2}
L	×	L	Write	Data in	I_{CC1}, I_{CC2}

× : "H" or "L"

DC Recommended Operating Conditions (Ta = 0 to +70℃, GND = 0V)

Item	Symbol	Min.	Typ.	Max.	Unit
Supply voltage	V_{CC}	4.5	5.0	5.5	V
Input high voltage	V_{IH}	2.2	—	V_{CC} + 0.3	V
Input low voltage	V_{IL}	−0.3*	—	0.8	V

* V_{IL} = −3.0V Min. for pulse width less than 50ns.

3

This Material Copyrighted By Its Respective Manufacturer

Electrical Characteristics

• DC and operating characteristics (Vcc = 5V ± 10%, GND = 0V, Ta = 0 to +70℃)

Item	Symbol	Test conditions		−70L/85L/10L/12L Min.	Typ.*	Max.	−70LL/85LL/10LL/12LL Min.	Typ.*	Max.	Unit
Input leakage current	I_{LI}	V_{IN} = GND to V_{CC}		−0.5	—	0.5	−0.5	—	0.5	μA
Output leakage current	I_{LO}	$\overline{CE}$ = V_{IH} or $\overline{OE}$ = V_{IH} $V_{I/O}$ = GND to V_{CC}		−0.5	—	0.5	−0.5	—	0.5	μA
Operating power supply current	I_{CC1}	$\overline{CE}$ = V_{IL}, V_{IN} = V_{IH} or V_{IL}, I_{OUT} = 0mA		—	3	10	—	3	10	mA
		$\overline{CE}$ ≦ 0.2V V_{IN} ≦ 0.2V or ≧ V_{CC} − 0.2V		—	1	5	—	1	5	
Average operating current	I_{CC2}	Cycle = Min, Duty = 100%, I_{OUT} = 0mA	70L/70LL	—	30	50	—	30	50	mA
			85L/85LL	—	25	50	—	25	50	
			10L/10LL	—	23	50	—	23	50	
			12L/12LL	—	20	50	—	20	50	
Standby current	I_{SB1}	$\overline{CE}$ ≧ V_{CC} − 0.2V	0 to 70℃	—	—	25	—	—	5	μA
			0 to 40℃	—	—	5	—	—	1	
			25℃	—	0.5	2	—	0.2	0.5	
	I_{SB2}	$\overline{CE}$ = V_{IH}		—	0.4	2	—	0.4	2	mA
Output high voltage	V_{OH}	I_{OH} = −1.0mA		2.4	—	—	2.4	—	—	V
Output low voltage	V_{OL}	I_{OL} = 2.1mA		—	—	0.4	—	—	0.4	V

* V_{CC} = 5V, Ta = 25℃

I/O capacitance (Ta = 25℃, f = 1MHz)

Item	Symbol	Test conditions	Min.	Max.	Unit
Input capacitance	C_{IN}	V_{IN} = 0V	—	6	pF
I/O capacitance	$C_{I/O}$	$V_{I/O}$ = 0V	—	8	pF

Note) This parameter is sampled and is not 100% tested.

This Material Copyrighted By Its Respective Manufacturer

AC characteristics

• AC test conditions

(V_{CC} = 5V ± 10%, Ta = 0 to +70℃)

Item		Conditions
Input pulse high level		V_{IH} = 2.2V
Input pulse low level		V_{IL} = 0.8V
Input rise time		tr = 5ns
Input fall time		tf = 5ns
Input and output reference level		1.5V
Output load conditions	85L/85LL/10L/10LL/12L/12LL	C_L* = 100pF, 1TTL
	70L/70LL	C_L* = 30pF, 1TTL

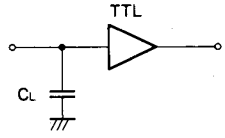

* C_L includes scope and jig capacitances.

3

This Material Copyrighted By Its Respective Manufacturer

• Read cycle

Item	Symbol	−70L/70LL		−85L/85LL		−10L/10LL		−12L/12LL		Unit
		Min.	Max.	Min.	Max.	Min.	Max.	Min.	Max.	
Read cycle time	t_{RC}	70	—	85	—	100	—	120	—	ns
Address access time	t_{AA}	—	70	—	85	—	100	—	120	ns
Chip enable access time	t_{CO}	—	70	—	85	—	100	—	120	ns
Output enable to output valid	t_{OE}	—	35	—	45	—	50	—	60	ns
Output hold from address change	t_{OH}	20	—	20	—	20	—	20	—	ns
Chip enable to output in low Z ($\overline{CE}$)	t_{LZ}	10	—	10	—	10	—	10	—	ns
Output enable to output in low Z ($\overline{OE}$)	t_{OLZ}	5	—	5	—	5	—	5	—	ns
Chip disable to output in high Z ($\overline{CE}$)	t_{HZ}*	0	30	0	30	0	30	0	30	ns
Chip disable to output in high Z ($\overline{OE}$)	t_{OHZ}*	0	30	0	30	0	35	0	40	ns

* t_{HZ} and t_{OHZ} are defined as the time required for outputs to turn to high impedance state and are not referred to as output voltage levels.

• Write cycle

Item	Symbol	−70L/70LL		−85L/85LL		−10L/10LL		−12L/12LL		Unit
		Min.	Max.	Min.	Max.	Min.	Max.	Min.	Max.	
Write cycle time	t_{WC}	70	—	85	—	100	—	120	—	ns
Address valid to end of write	t_{AW}	65	—	75	—	80	—	100	—	ns
Chip enable to end of write	t_{CW}	65	—	75	—	80	—	100	—	ns
Data to write time overlap	t_{DW}	30	—	30	—	35	—	40	—	ns
Data hold from write time	t_{DH}	0	—	0	—	0	—	0	—	ns
Write pulse width	t_{WP}	50	—	50	—	60	—	70	—	ns
Address setup time	t_{AS}	0	—	0	—	0	—	0	—	ns
Write recovery time ($\overline{WE}$)	t_{WR}	0	—	0	—	0	—	0	—	ns
Write recovery time ($\overline{CE}$)	t_{WR1}	0	—	0	—	0	—	0	—	ns
Output active from end of write	t_{OW}	10	—	10	—	10	—	10	—	ns
Write to output in high Z	t_{WHZ}*	0	25	0	25	0	25	0	25	ns

* t_{WHZ} is defined as the time required for outputs to turn to high impedance state and is not referred to as output voltage level.

This Material Copyrighted By Its Respective Manufacturer

Timing Waveform

- Read cycle (1) : $\overline{CE} = \overline{OE} = V_{IL}$, $\overline{WE} = V_{IH}$

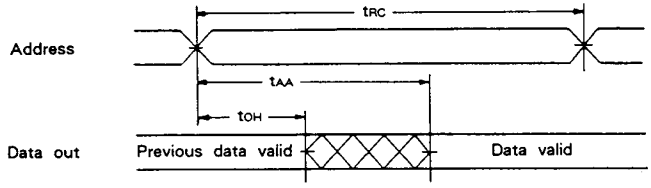

- Read cycle (2) : $\overline{WE} = V_{IH}$

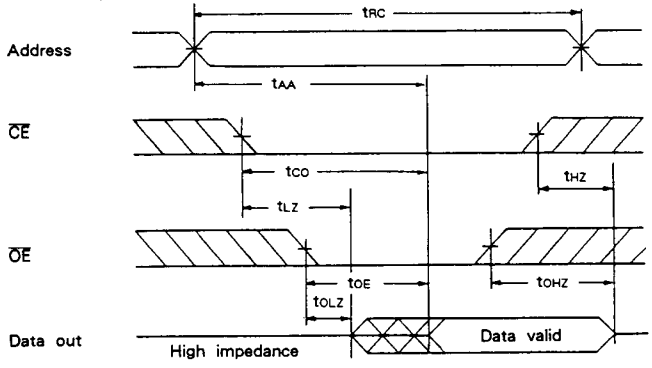

- Write cycle (1) : $\overline{WE}$ control

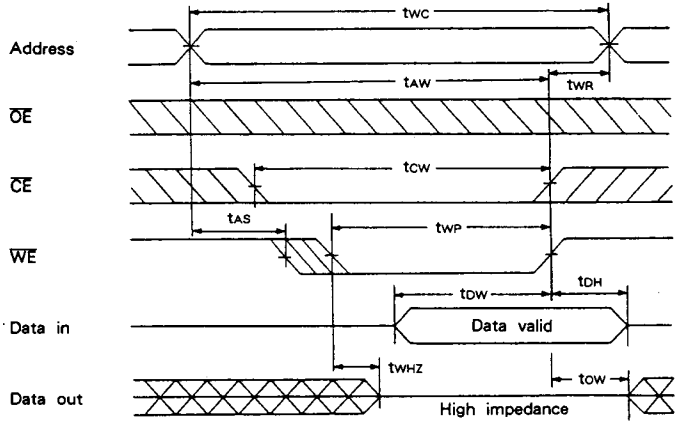

3

This Material Copyrighted By Its Respective Manufacturer

• Write cycle (2) : $\overline{CE}$ control

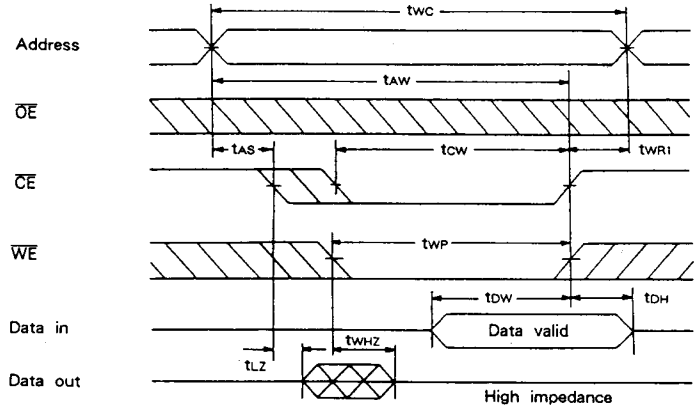

During I/O pins are in the output state, the data input signals of opposite phase to the output must not be applied.

Data Retention Characteristics (Ta = 0 to 70℃)

Item	Symbol	Test conditions		-70L/85L/10L/12L Min.	Typ.	Max.	-70LL/85LL/10LL/12LL Min.	Typ.	Max.	Unit
Data retention voltage	V_{DR}	$\overline{CE} \geqq V_{CC} - 0.2V$		2.0	—	5.5	2.0	—	5.5	V
Data retention current	I_{CCDR1}	$V_{CC} = 3.0V$, $\overline{CE} \geqq 2.8V$	Ta = 0 to 70℃	—	—	10	—	—	3	μA
			Ta = 0 to 40℃	—	—	2	—	—	0.6	
			25℃	—	0.25	1	—	0.1	0.3	
	I_{CCDR2}	$V_{CC} = 2.0$ to $5.5V$, $\overline{CE} \geqq V_{CC} - 0.2V$		—	0.5	25	—	0.2	5	μA
Data retention setup time	t_{CDRS}	Chip disable to data retention mode		0	—	—	0	—	—	ns
Recovery time	t_R			t_{RC}*	—	—	t_{RC}*	—	—	ns

* t_{RC} : Read cycle time

Data retention waveform

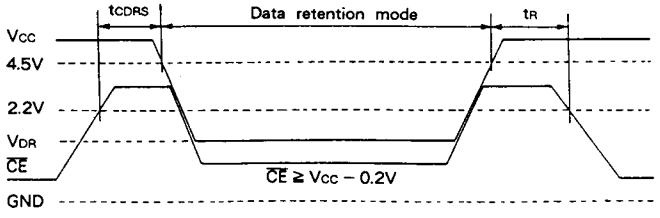

This Material Copyrighted By Its Respective Manufacturer

Example of Representative Characteristics

Supply current vs. Supply voltage

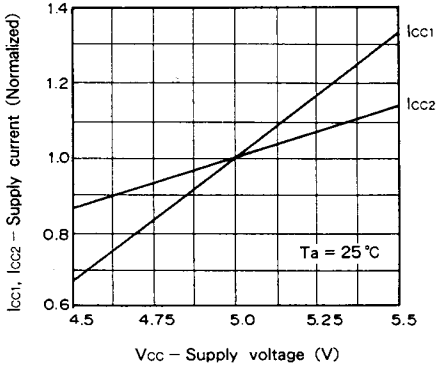

Supply current vs. Ambient temperature

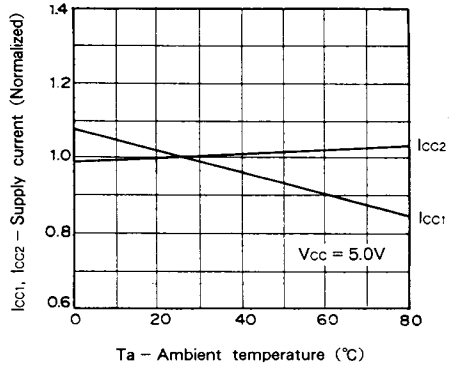

Supply current vs. Frequency

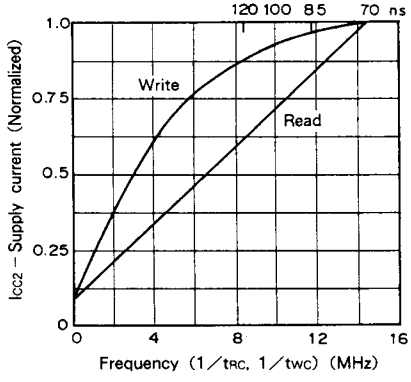

Access time vs. Load capacitance

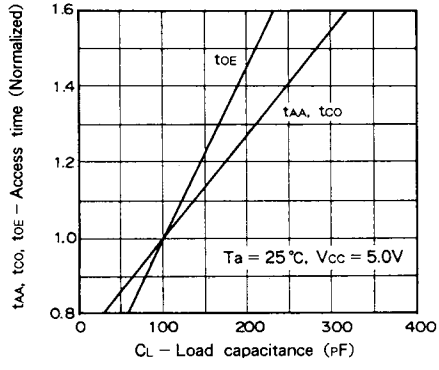

Access time vs. Supply voltage

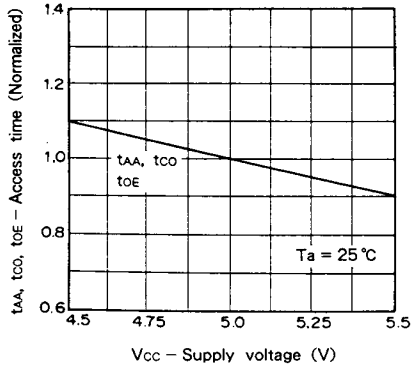

Access time vs. Ambient temperature

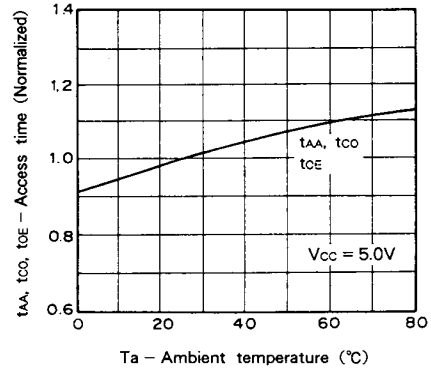

This Material Copyrighted By Its Respective Manufacturer

Standby current vs. Supply voltage

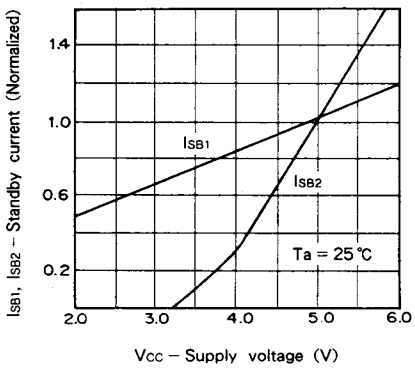

Standby current vs. Ambient temperature

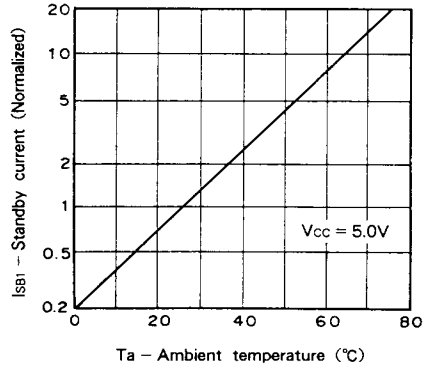

Input voltage level vs. Supply voltage

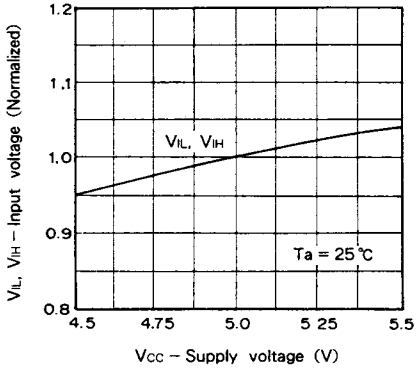

Standby current vs. Ambient temperature

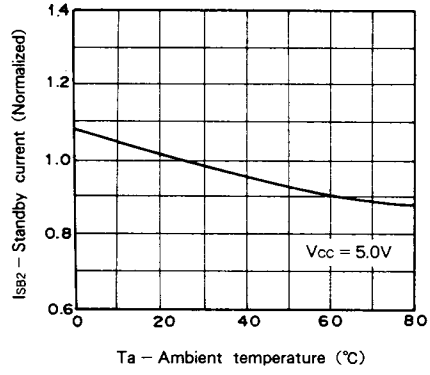

Output high current vs. Output high voltage

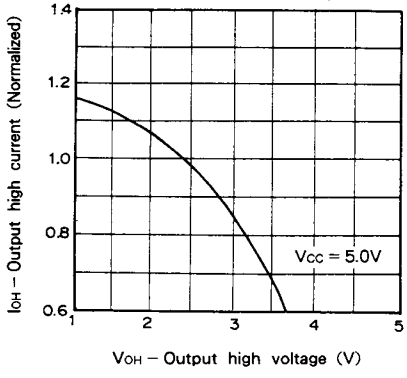

Output low current vs. Output low voltage

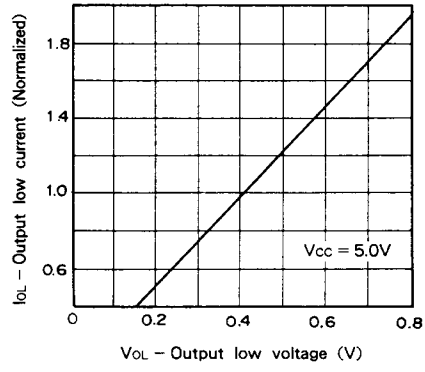

This Material Copyrighted By Its Respective Manufacturer

Package Outline Unit : mm

CXK58257ATM

28pin TSOP (Plastic)

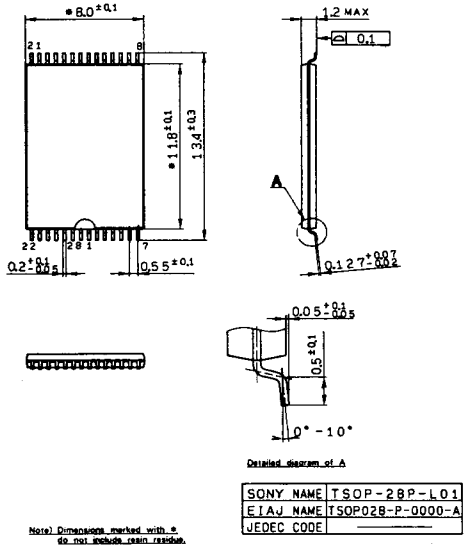

CXK58257AYM

28pin TSOP (Plastic)

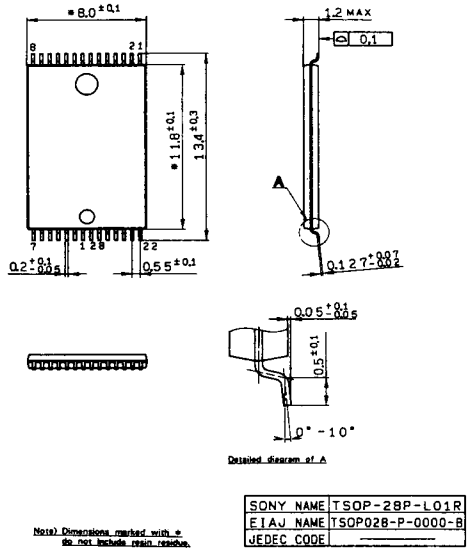

This Material Copyrighted By Its Respective Manufacturer