HARRIS Semiconductor

CA3085, CA3085A CA3085B

Positive Voltage Regulators from 1.7V to 46V at Currents Up to 100mA

April 1994

Features

- Up to 100mA Output Current
- Input and Output Short-Circuit Protection
- Load and Line Regulation 0.025%
- Pin Compatible with LM100 Series
- Adjustable Output Voltage

Applications

- Shunt Voltage Regulator
- Current Regulator
- Switching Voltage Regulator
- High-Current Voltage Regulator
- Combination Positive and Negative Voltage Regulator
- Dual Tracking Regulator

TYPE	V_{IN} RANGE (V)	V_{OUT} RANGE (V)	MAX I_{OUT} (mA)	MAX LOAD REGULATION (%V_{OUT})
CA3085	7.5 to 30	1.8 to 26	12 (Note 1)	0.1
CA3085A	7.5 to 40	1.7 to 36	100	0.15
CA3085B	7.5 to 50	1.7 to 46	100	0.15

NOTE:

1. This value may be extended to 100mA; however, regulation is not specified beyond 12mA.

Description

The CA3085, CA3085A, and CA3085B are silicon monolithic integrated circuits designed specifically for service as voltage regulators at output voltages ranging from 1.7V to 46V at currents up to 100 milliamperes.

A block diagram of the CA3085 Series is shown. The diagram shows the connecting terminals that provide access to the regulator circuit components. The voltage regulators provide important features such as: frequency compensation, short-circuit protection, temperature-compensated reference voltage, current limiting, and booster input. These devices are useful in a wide range of applications for regulating high-current, switching, shunt, and positive and negative voltages. They are also applicable for current and dual-tracking regulation.

The CA3085A and CA3085B have output current capabilities up to 100mA and the CA3085 up to 12mA without the use of external pass transistors. However, all the devices can provide voltage regulation at load currents greater than 100mA with the use of suitable external pass transistors. The CA3085 Series has an unregulated input voltage ranging from 7.5V to 30V (CA3085), 7.5V to 40V (CA3085A), and 7.5V to 50V (CA3085B) and a minimum regulated output voltage of 26V (CA3085), 36V (CA3085A), and 46V (CA3085B).

Ordering Information

PART NUMBER	TEMPERATURE RANGE	PACKAGE
CA3085, A, B	-55°C to +125°C	8 Pin Metal Can
CA3085E, AE, BE	-55°C to +125°C	8 Lead Plastic DIP

Pinouts

CA3085, A, B, E, AE, BE (PDIP)
TOP VIEW

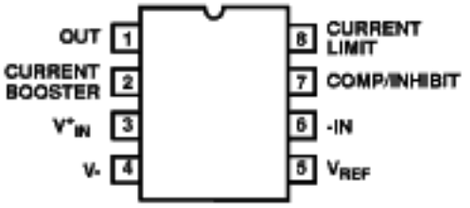

CA3085S, AS, BS (CAN)
TOP VIEW

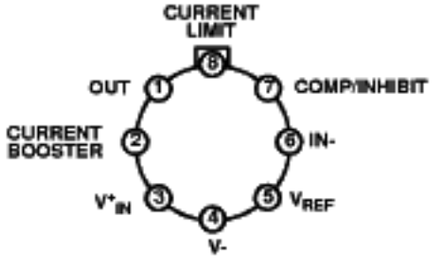

Functional Block Diagram

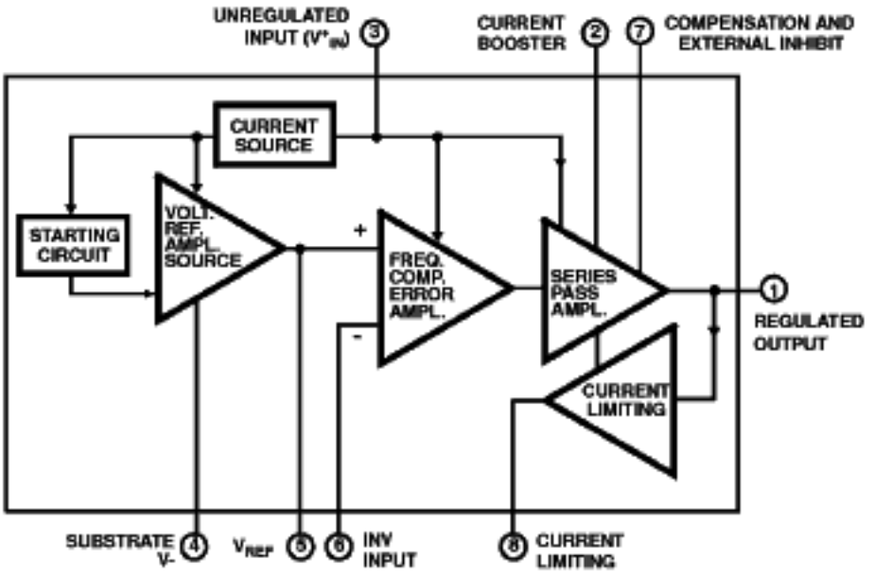

Absolute Maximum Ratings

Supply Voltage . . . . . +7.0V
Unregulated Input Voltage
CA3085 . . . . . 30V
CA3085A. 40V
CA3085B. 50V
Storage Temperature Range . . . . . -65°C to +150°C
Junction Temperature . . . . . +175°C
Plastic DIP Package . . . . . +150°C
Lead Temperature (Soldering 10s) . . . . . +265°C

Thermal Information

Thermal Resistance	θ_{JA}	θ_{JC}
Metal Can (Without Heat Sink)	156°C/W	68°C/W
Plastic DIP Package	155°C/W	-

Maximum Package Power Dissipation
Plastic DIP (Without Heat Sink)
Up to T_A = 55°C 630mW
Above T_A = 55°C . . . . . Derate Linearly at 6.67mW/°C
Metal Can (With Heat Sink)
Up to T_C = 55°C 1.6W
Above T_C = 55°C . . . . . Derate Linearly at 16.7mW/°C

CAUTION: Stresses above those listed in "Absolute Maximum Ratings" may cause permanent damage to the device. This is a stress only rating and operation of the device at these or any other conditions above those indicated in the operational sections of this specification is not implied.

Operating Conditions

Operating Voltage Range . . . . . +1.7V to +46V
Operating Temperature Range . . . . . -55°C to +125°C

Maximum Voltage Ratings

The following chart gives the range of voltages which can be applied to the terminal listed vertically with respect to the terminals listed horizontally. For example, the voltage range between vertical Terminal Number 7 and horizontal Terminal Number 1 is +3 to -10V.

TERMINAL NUMBER	5	6	7	8	1	2	3	4
5	-	+5 -5	Note 1	Note 1	Note 1	Note 1	Note 1	+10 0
6	-	-	Note 1	Note 1	Note 1	Note 1	Note 1	Note 1
7	-	-	-	+3 -10	-103	Note 1	Note 1	+ (Note 2) 0
8	-	-	-	-	+5 -1	Note 1	Note 1	Note 1
1	-	-	-	-	-	+10 - (Note 2)	0 - (Note 2)	+ (Note 2) 0
2	-	-	-	-	-	-	0 -	+ (Note 2) 0
3	-	-	-	-	-	-	-	+ (Note 2) 0
4	-	-	-	-	-	-	-	Substrate and Case

NOTES:

1. Voltages are not normally applied between these terminals; however, voltages appearing between these terminals are safe, if the specified voltage limits between all other terminals are not exceeded.
2. 30V (CA3085); 40V (CA3085A); 50V (CA3085B)

Maximum Current Ratings

TERMINAL NUMBER	I_{IN} (mA)	I_{OUT} (mA)
5	10	1.0
6	1.0	-0.1
7	1.0	-0.1
8	0.1	10
1	20	150
2	150	60
3	150	60
4	-	-

DC Electrical Specifications T_A = +25°C, Unless Otherwise Specified

PARAMETERS	SYMBOL	TEST CONDITIONS	CA3085			CA3085A			CA3085B			UNITS
			MIN	TYP	MAX	MIN	TYP	MAX	MIN	TYP	MAX	
DC CHARACTERISTICS												
Reference Voltage	V_{REF}	V^+_{IN} = 15V (Figure 3)	1.4	1.6	1.8	1.5	1.6	1.7	.15	1.6	1.7	V
Quiescent Regulator Current	$I_{quiescent}$	V^+_{IN} = 30V (Figure 3)	-	3.3	4.5	-	-	-	-	-	-	mA
		V^+_{IN} = 40V (Figure 3)	-	-	-	-	3.65	5	-	-	-	mA
		V^+_{IN} = 50V (Figure 3)	-	-	-	-	-	-	-	4.05	7	mA
Input Voltage Range	$V_{IN(range)}$		7.5	-	30	7.5	-	40	7.5	-	50	V
Maximum Output Voltage	$V_{O(MAX)}$	V^+_{IN} = 30, 40, 50V (Note 1); R_L = 365Ω; Term. No. 6 to GND (Figure 3)	26	27	-	36	37	-	46	47	-	V
Maximum Output Voltage	$V_{O(MIN)}$	V^+_{IN} = 30V (Figure 3)	-	1.6	1.8	-	1.6	1.7	-	1.6	1.7	V
Input - Output Voltage Differential	V_{IN}-V_{OUT}		4	-	28	4	-	38	3.5	-	48	V
Limiting Current	I_{LIM}	V^+_{IN} = 16V, V^+_{OUT} = 10V, RSCP = 6Ω (Note 2) (Figure 6)	-	96	120	-	96	120	-	96	120	mA
Load Regulation (Note 3)		I_L = 1 to 100mA, R_{SCP} = 0	-	-	-	-	0.025	0.15	-	0.025	0.15	%V_{OUT}
		I_L = 1 to 100mA, R_{SCP} = 0, T_A = 0°C to +70°C	-	-	-	-	0.035	0.6	-	0.035	0.6	%V_{OUT}
		I_L = 1 to 12mA, R_{SCP} = 0	-	0.003	0.1	-	-	-	-	-	-	%V_{OUT}
Line Regulation (Note 4)		I_L = 1mA, R_{SCP} = 0	-	0.025	0.1	-	0.025	0.075	-	0.025	0.04	%/V
		I_L = 1mA, R_{SCP} = 0, T_A = 0°C to +70°C	-	0.04	0.15	-	0.04	0.1	-	0.04	0.08	%/V
Equivalent Noise Output Voltage	V_{NOISE}	V^+_{IN} = 25V (Figure 10), C_{REF} = 0	-	0.5	-	-	0.5	-	-	0.5	-	mVp-p
		V^+_{IN} = 25V (Figure 10), C_{REF} = 0.22µF	-	0.3	-	-	0.3	-	-	0.3	-	mVp-p
Ripple Rejection		V^+_{IN} = 25V, f = 1kHz (Figure 11), C_{REF} = 0	-	50	-	-	50	-	45	50	-	dB
		V^+_{IN} = 25V, f = 1kHz (Figure 11), C_{REF} = 2µF	-	56	-	-	56	-	50	56	-	dB
Output Resistance	r_O	V^+_{IN} = 25V, f = 1kHz (Figure 11)	-	0.075	1.1	-	0.075	0.3	-	0.075	0.3	Ω
Temperature Coefficient of Reference and Output Voltages	V_{REF}, V_O (Note 4)	I_L = 0, V_{REF} = 1.6V	-	0.0035	-	-	0.0035	-	-	0.0035	-	%/°C

DC Electrical Specifications T_A = +25°C, Unless Otherwise Specified **(Continued)**

PARAMETERS	SYMBOL	TEST CONDITIONS	CA3085			CA3085A			CA3085B			UNITS
			MIN	TYP	MAX	MIN	TYP	MAX	MIN	TYP	MAX	
LOAD TRANSIENT RECOVERY TIME												
Turn On	t_{ON}	V^+_{IN} = 25V, +50mA Step (Figure 16)	-	1	-	-	1	-	-	1	-	µs
Turn Off	t_{OFF}	V^+_{IN} = 25V, -50mA Step (Figure 16)	-	3	-	-	3	-	-	3	-	µs
LOAD TRANSIENT RECOVERY TIME												
Turn On	t_{ON}	V^+_{IN} = 25V, f = 1kHz, 2V Step	-	0.8	-	-	0.8	-	-	0.8	-	µs
Turn Off	t_{OFF}		-	0.4	-	-	0.4	-	-	0.4	-	µs

NOTES:

1. 30V (CA3085), 40V (CA3085A), 50V (CA3085B)
2. R_{SCP}: Short Circuit Protection Resistance
3. Load Regulation = $[\Delta V_{OUT} \div V_{OUT}(\text{initial})] \times 100\%$
4. Line Regulation = $[\Delta V_{OUT} \div V_{OUT}(\text{initial})(\Delta V_{IN})] \times 100\%$

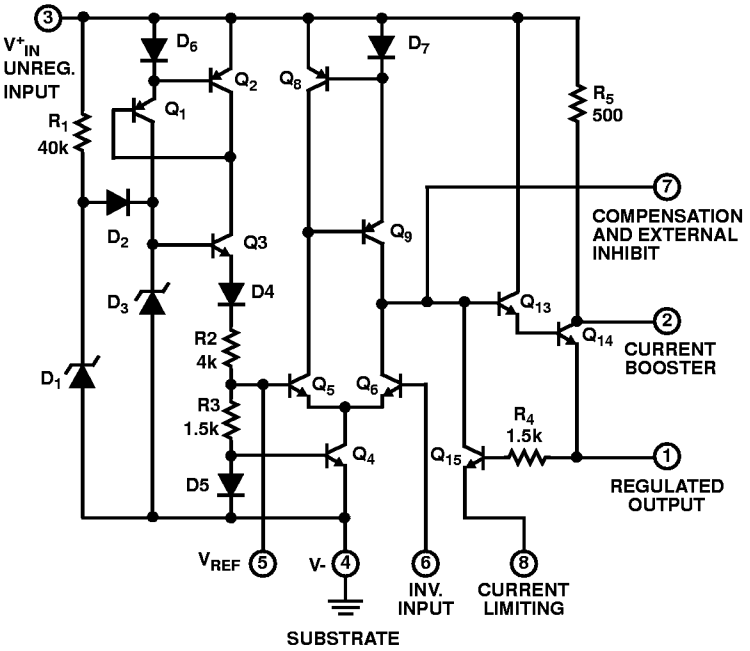

All Resistance Values are in Ohms

FIGURE 1. SCHEMATIC DIAGRAM OF CA3085 SERIES

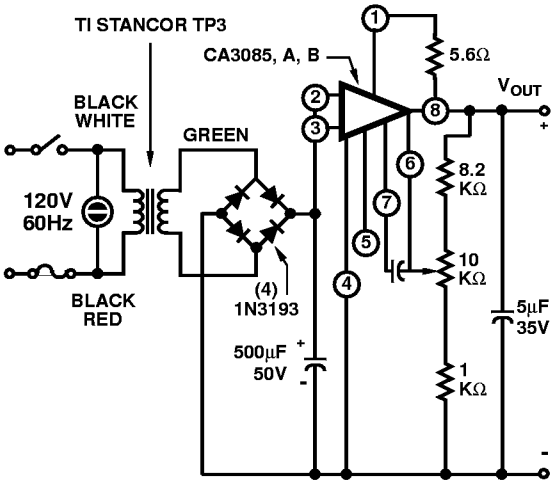

V_{OUT} = 3.5V to 20V (0 to 90mA)
Regulation = 0.2% (Line and Load)
Ripple < 0.5mV at Full Load

FIGURE 2. APPLICATION OF THE CA3085 SERIES IN A TYPICAL POWER SUPPLY

Test Circuits and Typical Performance Curves

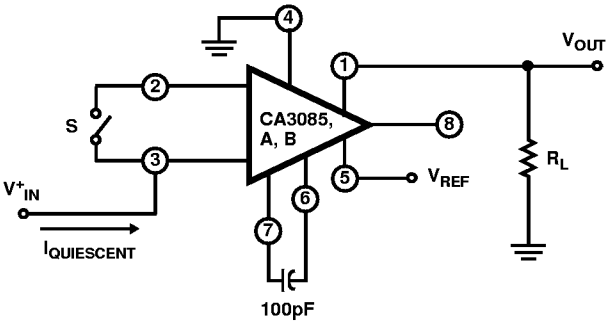

TEST	R_L	V_{IN}	CONNECT TERM NO. 6	S
V_{REF}	∞	+1.6	Open	Open
$I_{QUIESCENT}$	∞	+40	Open	Open
$V_{OUT(MAX)}$	365Ω	+40	Ground	Closed
$V_{OUT(MIN)}$	10k	+30	Terminal No.1	Open

FIGURE 3. TEST CIRCUIT FOR V_{REF}, $I_{QUIESCENT}$, $V_{OUT(MAX)}$, $V_{OUT(MIN)}$

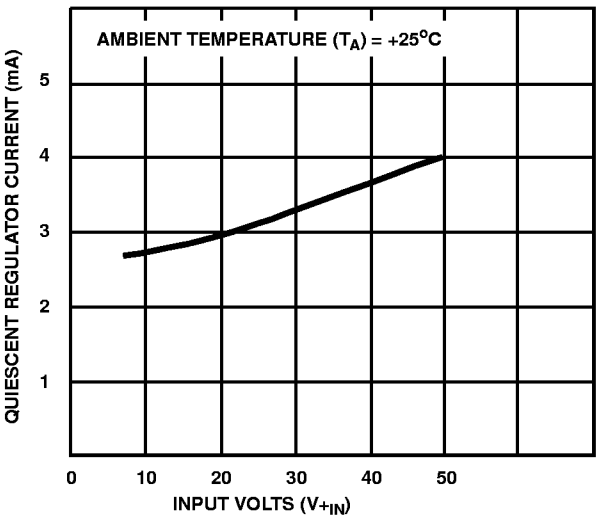

FIGURE 4. $I_{QUIESCENT}$ vs V^+_{IN}

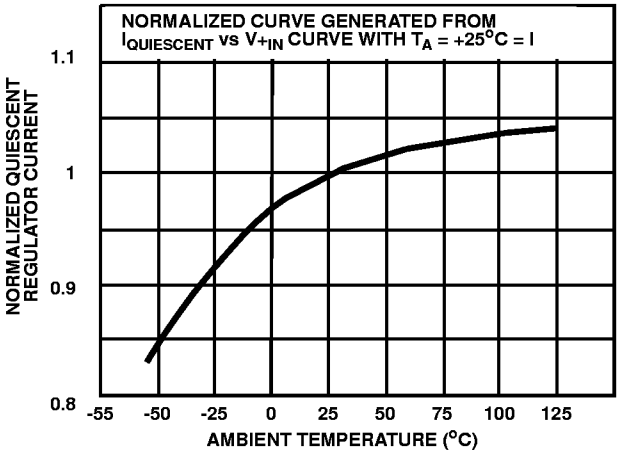

FIGURE 5. NORMALIZED $I_{QUIESCENT}$ vs T_A

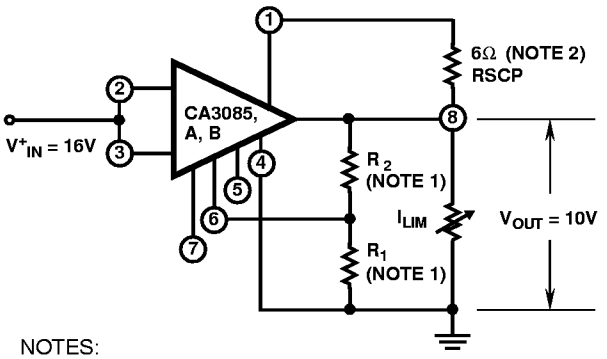

NOTES:
1. $V_{OUT} = 1.6 \times (R_1 + R_2 \div R_1)$
2. The limits current is inversely proportional to R_{SCP}

FIGURE 6. TEST CIRCUIT FOR LIMITING CURRENT

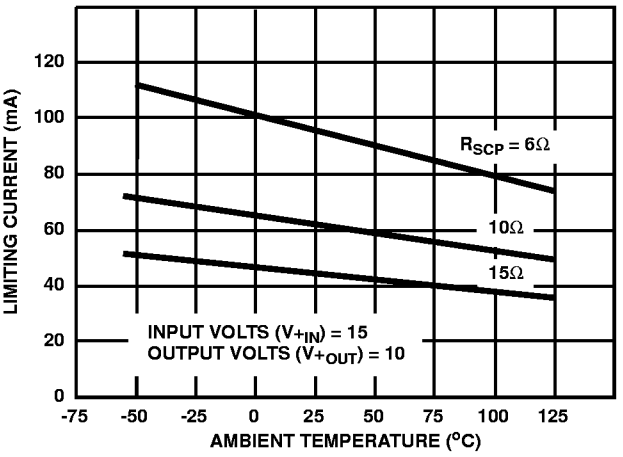

FIGURE 7. I_{LIM} vs T_A

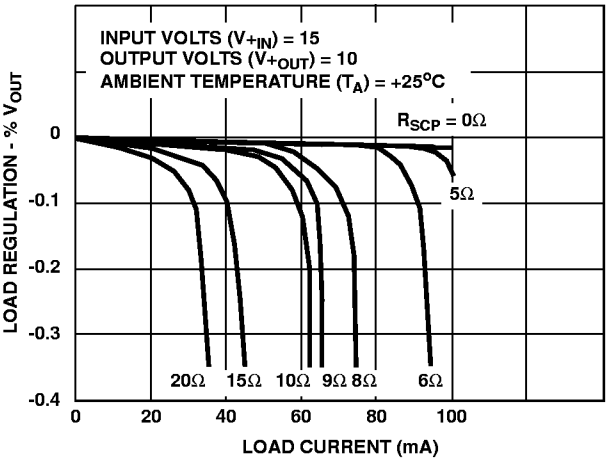

FIGURE 8. LOAD REGULATION CHARACTERISTICS

Test Circuits and Typical Performance Curves (Continued)

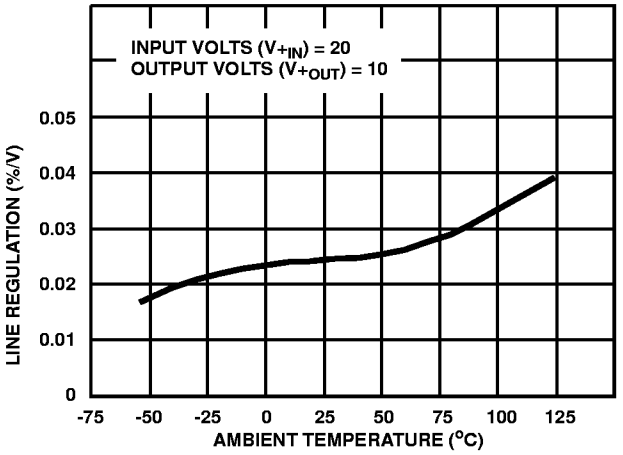

FIGURE 9. LINE REGULATION TEMPERATURE CHARACTERISTICS

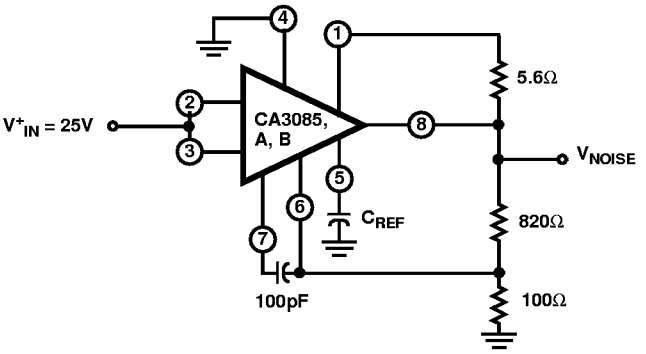

FIGURE 10. TEST CIRCUIT FOR NOISE VOLTAGE

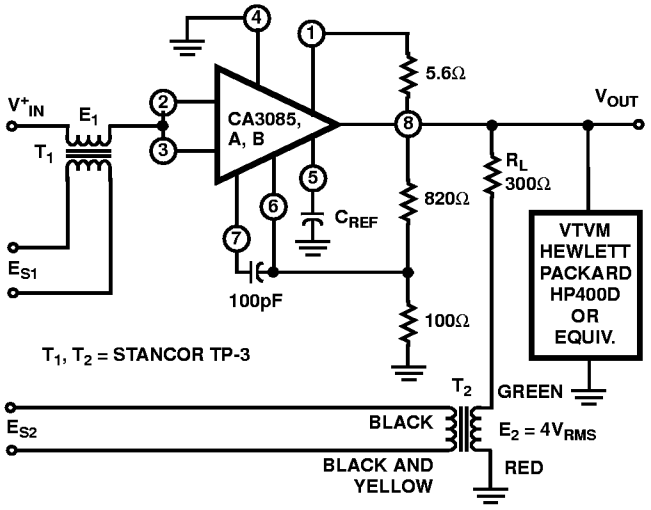

FIGURE 11. TEST CIRCUIT FOR RIPPLE REJECTION AND OUTPUT RESISTANCE

TEST PROCEDURES FOR TEST CIRCUIT FOR RIPPLE REJECTION AND OUTPUT RESISTANCE

Output Resistance

Conditions

1. V_{IN} = +25V, C_{REF} = 0, Short E_1
2. Set E_{S2} at 1kHz so that $E_2 = 4V_{RMS}$
3. Read V_{OUT} on a VTVM, such as a Hewlett-Packard, HP400D or Equivalent
4. Calculate R_{OUT} from $R_{OUT} = V_{OUT(R_L/E_2)}$

Ripple Rejection - I

Conditions

1. V_{IN} = +25V, C_{REF} = 0, Short E_2
2. Set E_{S1} at 1kHz so that $E_1 = 3V_{RMS}$
3. Read V_{OUT} on a VTVM, such as a Hewlett-Packard, HP400D or Equivalent
4. Calculate Ripple Rejection from 20 log (E_1/V_{OUT})

Ripple Rejection - II

Conditions

1. Repeat Ripple Rejection I with $C_{REF} = 2\mu F$

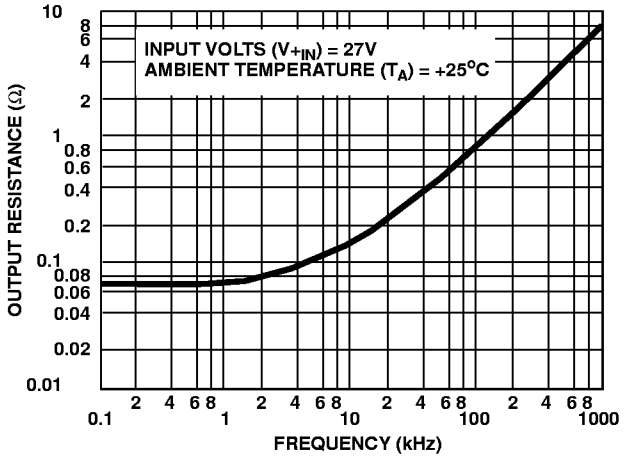

FIGURE 12. r_O vs f

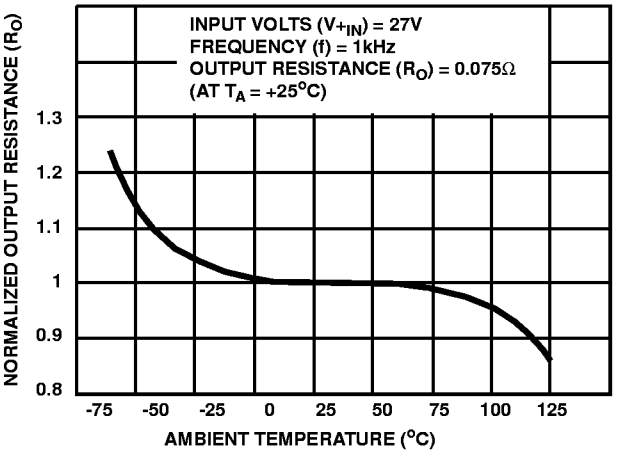

FIGURE 13. NORMALIZED r_O vs T_A

Test Circuits and Typical Performance Curves (Continued)

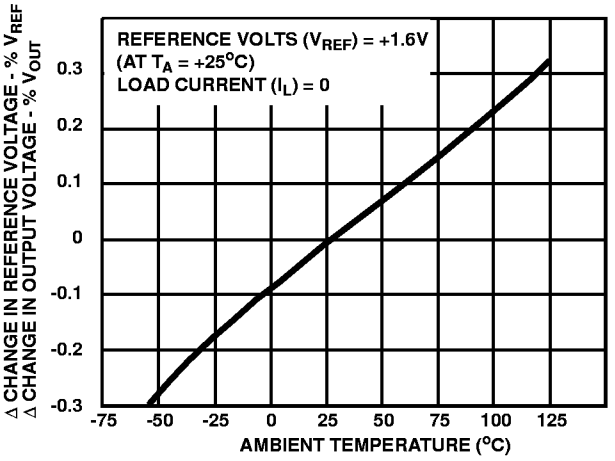

FIGURE 14. TEMPERATURE COEFFICIENT OF V_{REF} AND V_{OUT}

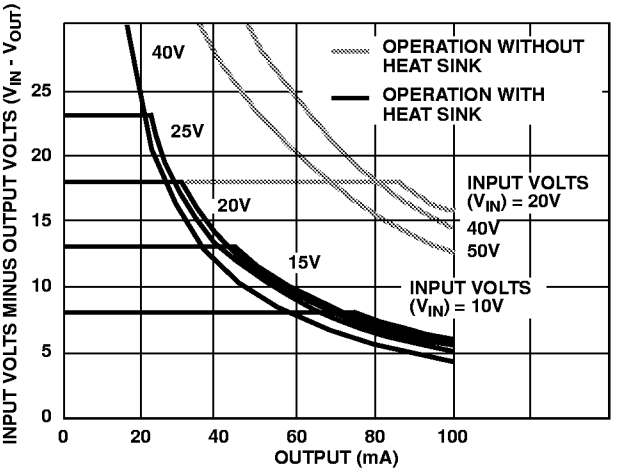

FIGURE 15. DISSIPATION LIMITATION (V_{IN} - V_{OUT} vs I_{OUT})

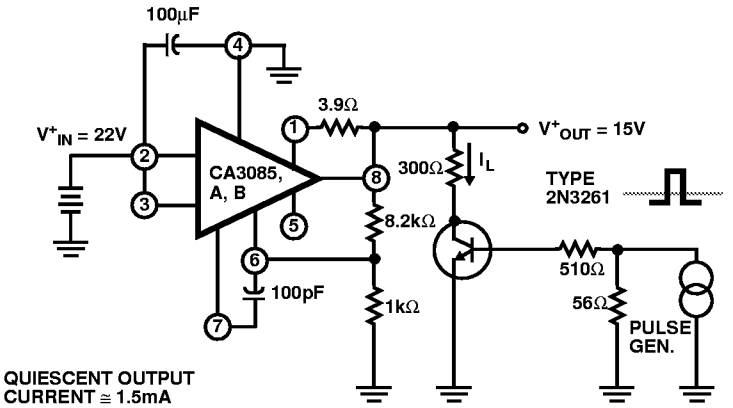

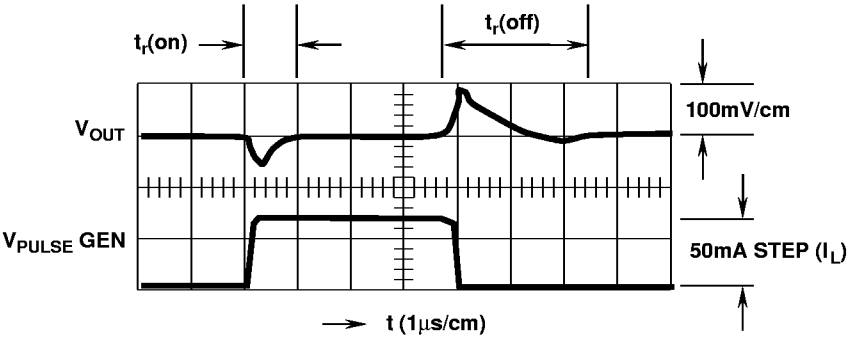

FIGURE 16. TURN-ON AND TURN-OFF RECOVERY TIME TEST CIRCUIT WITH ASSOCIATED WAVEFORMS

See Application Note AN6157 for further information

Typical Regulator Circuits

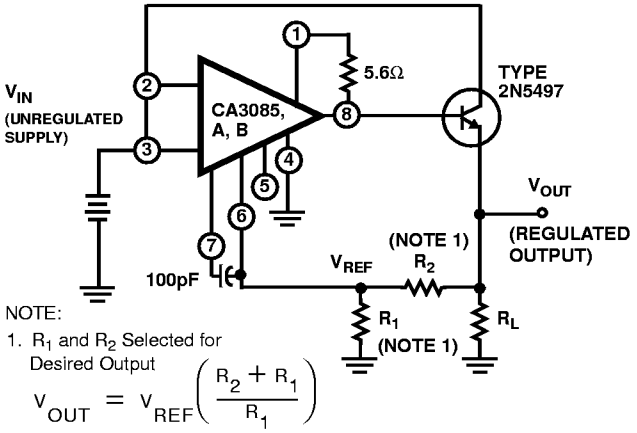

NOTE:
1. R_1 and R_2 Selected for Desired Output

$$V_{OUT} = V_{REF}\left(\frac{R_2 + R_1}{R_1}\right)$$

FIGURE 17. TYPICAL HIGH CURRENT VOLTAGE REGULATOR CIRCUIT

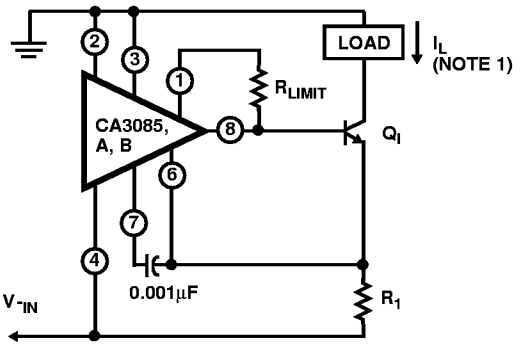

Q_1: Any N-P-N Silicon Transistor that can handle a 2A Load Current such as 2N3772 or Equivalent

NOTE
1. $I_L = 1.6 \div R_1$, $200\mu A \le I_L \le 2A$

FIGURE 18. TYPICAL CURRENT REGULATOR CIRCUIT

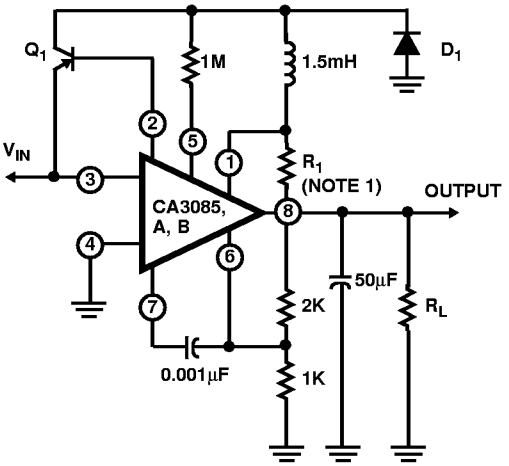

All Resistance Values are in Ohms
D_1: 1N4001 or Equivalent
Q_1: 2N5322 or Equivalent

NOTE:
1. $R_1 = 0.7\ I_L$ (Max)

FIGURE 19. TYPICAL SWITCHING REGULATOR CIRCUIT

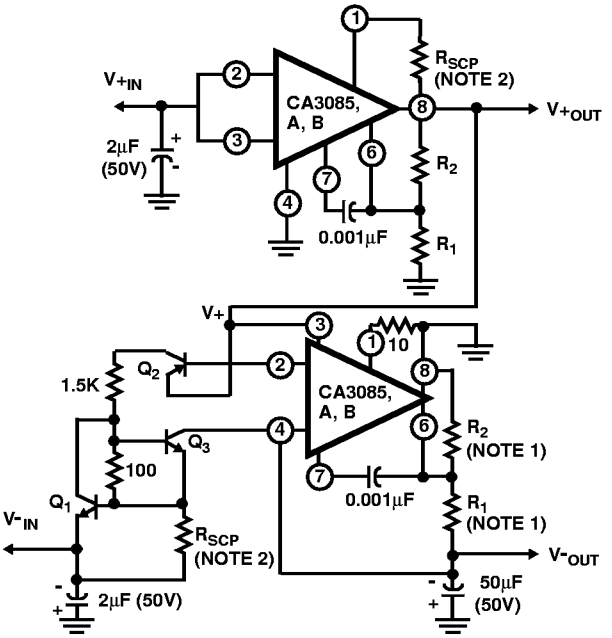

All Resistance Values are in Ohms
Q_1: 2N2102 or Equivalent
Q_2: Any P-N-P Silicon Transistor (2N5322 or Equivalent)
Q_3: Any N-P-N Silicon Transistor that can handle the desired Load Current (2N3772 or Equivalent)

NOTE:
1. $V_{OUT} = (R_1 + R_2) \div R_1$
2. R_{SCP}: Short Circuit Protection Resistance

FIGURE 20. COMBINATION POSITIVE AND NEGATIVE VOLTAGE REGULATOR CIRCUIT