Document No.	853–0143
ECN No.	96054
Date of Issue	March 14, 1989
Status	Product Specification
Memory Products	

82S130
82S131
2K-bit TTL bipolar PROM

DESCRIPTION

The 82S130 and 82S131 are field programmable, which means that custom patterns are immediately available by following the Signetics Generic I fusing procedure. The 82S130 and 82S131 devices are supplied with all outputs at logical Low. Outputs are programmed to a logic High level at any specified address by fusing the Ni-Cr link matrix.

These devices include on-chip decoding and 1 Chip Enable input for ease of memory expansion. They feature either Open Collector or 3-State outputs for optimization of word expansion in bused organizations.

Ordering information can be found on the following page.

The 82S130 and 82S131 devices are also processed to military requirements for operation over the military temperature range. For specifications and ordering information, consult the Signetics Military Data Handbook.

FEATURES

- Address access time: 50ns max
- Power dissipation: 0.3mW/bit typ
- Input loading: –100μA max
- On-chip address decoding
- One Chip Enable input
- Output options:
  - N82S130: Open Collector
  - N82S131: 3-State
- No separate fusing pins
- Unprogrammed outputs are Low level
- Fully TTL compatible

APPLICATIONS

- Prototyping/volume production
- Sequential controllers
- Microprogramming
- Hardwired algorithms
- Control store
- Random logic
- Code conversion

PIN CONFIGURATIONS

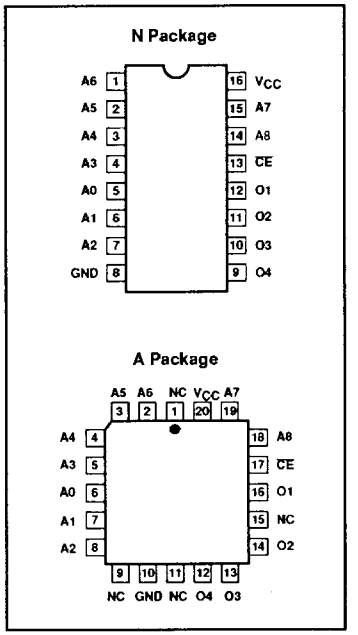

BLOCK DIAGRAM

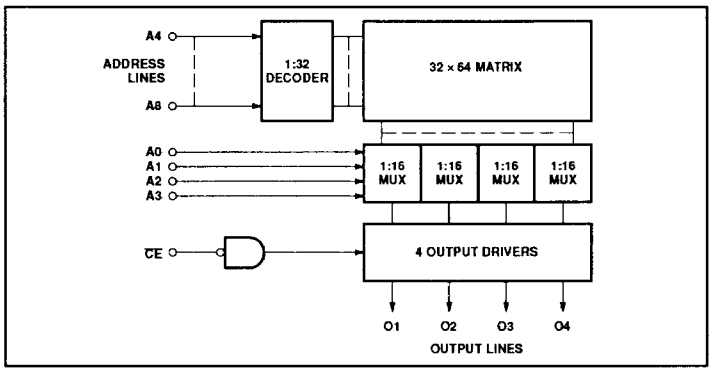

2K-bit TTL bipolar PROM (512 × 4) 82S130 / 82S131

ORDERING INFORMATION

DESCRIPTION	ORDER CODE
16-Pin Plastic Dual-In-Line 300mil-wide	N82S130 N, N82S131 N
20-Pin Plastic Leaded Chip Carrier 350mil-square	N82S130 A, N82S131 A

ABSOLUTE MAXIMUM RATINGS

SYMBOL	PARAMETER	RATING	UNIT
V_{CC}	Supply voltage	+7.0	V_{DC}
V_{IN}	Input voltage	+5.5	V_{DC}
V_{OH}	Output voltage High (82S130)	+5.5	V_{DC}
V_O	Output voltage Off-State (82S131)	+5.5	V_{DC}
T_{amb}	Operating temperature range	0 to +75	°C
T_{stg}	Storage temperature range	-65 to +150	°C

DC ELECTRICAL CHARACTERISTICS

$0°C \leq T_{amb} \leq +75°C$, $4.75V \leq V_{CC} \leq 5.25V$

SYMBOL	PARAMETER	TEST CONDITIONS[1,2]	LIMITS Min	Typ[3]	Max	UNIT
Input voltage						
V_{IL}	Low				0.8	V
V_{IH}	High		2.0			V
V_{IC}	Clamp	I_{IN} = -12mA			-1.2	V
Output voltage						
		$\overline{CE}$ = Low				
V_{OL}	Low	I_{OUT} = 16mA			0.45	V
V_{OH}	High (82S131)	I_{OUT} = -2.0mA	2.4			V
Input current						
I_{IL}	Low	V_{IN} = 0.45V			-100	µA
I_{IH}	High	V_{IN} = 5.5V			40	µA
Output current						
I_{OLK}	Leakage (82S130)	$\overline{CE}$ = High, V_{OUT} = 5.5V			40	µA
I_{OZ}	Hi-Z state (82S131)	$\overline{CE}$ = High, V_{OUT} = 5.5V			40	µA
		$\overline{CE}$ = High, V_{OUT} = 0.5V			-40	µA
I_{OS}	Short circuit (82S131)[4]	$\overline{CE}$ = Low, V_{OUT} = 0V, High stored	-15		-70	mA
Supply current[5]						
I_{CC}		V_{CC} = 5.25V			140	mA
Capacitance						
		$\overline{CE}$ = High, V_{CC} = 5.0V				
C_{IN}	Input	V_{IN} = 2.0V		5		pF
C_{OUT}	Output	V_{OUT} = 2.0V		8		pF

NOTES:
1. Positive current is defined as into the terminal referenced.
2. All voltages with respect to network ground.
3. Typical values are at V_{CC} = 5V, T_{amb} = +25°C.
4. Duration of short circuit should not exceed 1 second.
5. Measured with all inputs grounded and all outputs open.

2K-bit TTL bipolar PROM (512 × 4) 82S130 / 82S131

AC ELECTRICAL CHARACTERISTICS

$R_1 = 270\Omega$, $R_2 = 600\Omega$, $C_L = 30pF$, $0°C \leq T_{amb} \leq +75°C$, $4.75V \leq V_{CC} \leq 5.25V$

SYMBOL	PARAMETER	TO	FROM	LIMITS Min	LIMITS Typ[1]	LIMITS Max	UNIT
Access time[2]							
t_{AA}		Output	Address			50	ns
t_{CE}		Output	Chip Enable			30	ns
Disable time[3]							
t_{CD}		Output	Chip Disable			30	ns

NOTES:
1. Typical values are at $V_{CC} = 5V$, $T_{amb} = +25°C$.
2. Tested at an address cycle time of 1µs.
3. Measured at a delta of 0.5V from Logic Level with $R_1 = 750\Omega$, $R_2 = 750\Omega$, $C_L = 5pF$.

TEST LOAD CIRCUIT

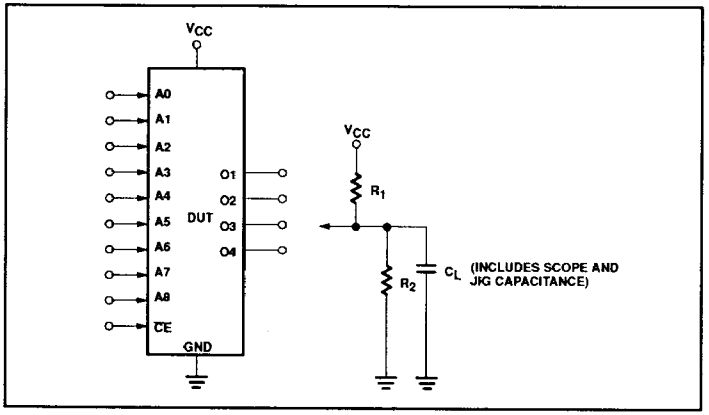

VOLTAGE WAVEFORMS

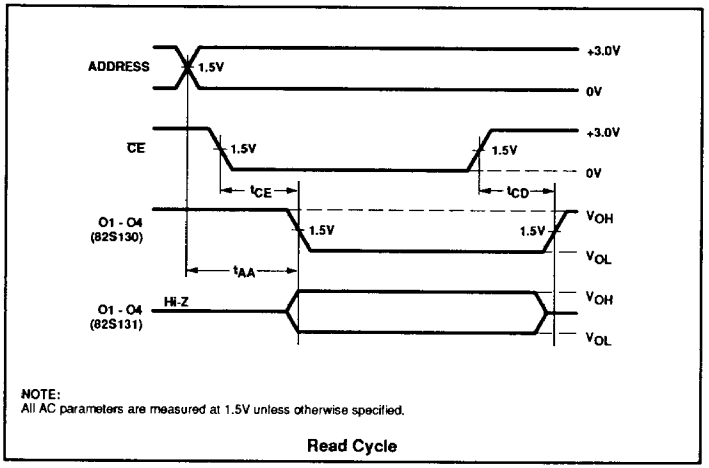

NOTE:
All AC parameters are measured at 1.5V unless otherwise specified.

Read Cycle