MCP6021/2/3/4

Rail-to-Rail Input/Output, 10 MHz Op Amps

Features

- Rail-to-Rail Input/Output
- Wide Bandwidth: 10 MHz (typ.)
- Low Noise: 8.7 nV/√Hz, at 10 kHz (typ.)
- Low Offset Voltage:
  - Industrial Temperature: ±500 µV (max.)
  - Extended Temperature: ±250 µV (max.)
- Mid-Supply V_{REF}: MCP6021 and MCP6023
- Low Supply Current: 1 mA (typ.)
- Total Harmonic Distortion: 0.00053% (typ., G = 1)
- Unity Gain Stable
- Power Supply Range: 2.5V to 5.5V
- Temperature Range:
  - Industrial: -40°C to +85°C
  - Extended: -40°C to +125°C

Typical Applications

- Automotive
- Driving A/D Converters
- Multi-Pole Active Filters
- Barcode Scanners
- Audio Processing
- Communications
- DAC Buffer
- Test Equipment
- Medical Instrumentation

Available Tools

- SPICE Macro Model (at www.microchip.com)
- FilterLab® software (at www.microchip.com)

Description

The MCP6021, MCP6022, MCP6023 and MCP6024 from Microchip Technology Inc. are rail-to-rail input and output op amps with high performance. Key specifications include: wide bandwidth (10 MHz), low noise (8.7 nV/√Hz), low input offset voltage and low distortion (0.00053% THD+N). These features make these op amps well suited for applications requiring high performance and bandwidth. The MCP6023 also offers a chip select pin ($\overline{CS}$) that gives power savings when the part is not in use.

The single MCP6021, single MCP6023 and dual MCP6022 are available in standard 8-lead PDIP, SOIC and TSSOP. The quad MCP6024 is offered in 14-lead PDIP, SOIC and TSSOP packages.

The MCP6021/2/3/4 family is available in the Industrial and Extended temperature ranges. It has a power supply range of 2.5V to 5.5V.

PACKAGE TYPES

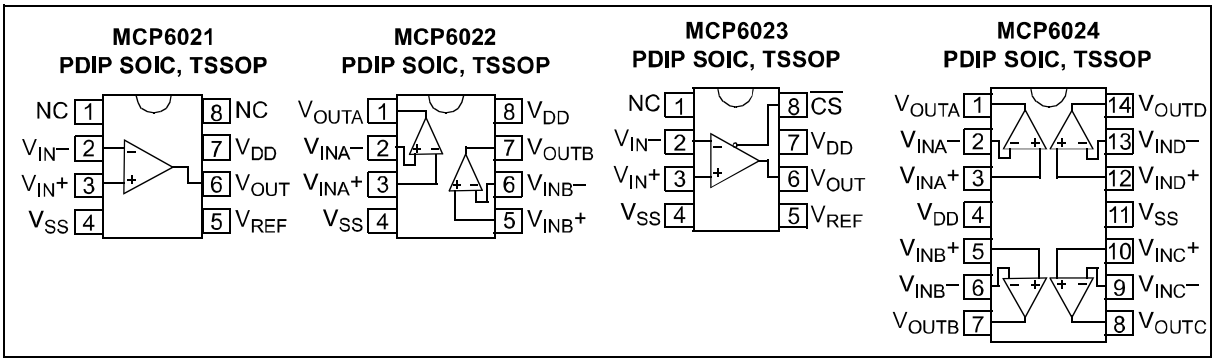

1.0 ELECTRICAL CHARACTERISTICS

Absolute Maximum Ratings †

V_{DD} - V_{SS} 7.0V
All Inputs and Outputs ..... V_{SS} - 0.3V to V_{DD} + 0.3V
Difference Input Voltage ..... $|V_{DD} - V_{SS}|$
Output Short Circuit Current ..... continuous
Current at Input Pins ..... ±2 mA
Current at Output and Supply Pins ..... ±30 mA
Storage Temperature ..... -65°C to +150°C
Junction Temperature ..... +150°C
ESD Protection on all pins (HBM/MM) ..... ≥ 2 kV / 200V

† Notice: Stresses above those listed under "Maximum Ratings" may cause permanent damage to the device. This is a stress rating only and functional operation of the device at those or any other conditions above those indicated in the operational listings of this specification is not implied. Exposure to maximum rating conditions for extended periods may affect device reliability.

Pin Function Table

Name	Function
V_{IN}+, V_{INA}+, V_{INB}+, V_{INC}+, V_{IND}+	Non-inverting Inputs
V_{IN}–, V_{INA}–, V_{INB}–, V_{INC}–, V_{IND}–	Inverting Inputs
V_{DD}	Positive Power Supply
V_{SS}	Negative Power Supply
$\overline{CS}$	Chip Select
V_{REF}	Reference Voltage
V_{OUT}, V_{OUTA}, V_{OUTB}, V_{OUTC}, V_{OUTD}	Outputs
NC	No Internal Connection

DC CHARACTERISTICS

Electrical Specifications: Unless otherwise indicated, T_A = +25°C, V_{DD} = +2.5V to +5.5V, V_{SS} = GND, V_{CM} = V_{DD}/2, V_{OUT} ≈ V_{DD}/2 and R_L = 10 kΩ to V_{DD}/2.

Parameters	Sym	Min	Typ	Max	Units	Conditions
Input Offset						
Input Offset Voltage:						
Industrial Temperature Parts	V_{OS}	-500	—	+500	µV	V_{CM} = 0V
Extended Temperature Parts	V_{OS}	-250	—	+250	µV	V_{CM} = 0V, V_{DD} = 5.0V
Extended Temperature Parts	V_{OS}	-2.5	—	+2.5	mV	V_{CM} = 0V, V_{DD} = 5.0V T_A = -40°C to +125°C
Input Offset Voltage Temperature Drift	$\Delta V_{OS}/\Delta T_A$	—	±3.5	—	µV/°C	T_A = -40°C to +125°C
Power Supply Rejection Ratio	PSRR	74	90	—	dB	V_{CM} = 0V
Input Current and Impedance						
Input Bias Current	I_B	—	1	—	pA	
Industrial Temperature Parts	I_B	—	30	150	pA	T_A = +85°C
Extended Temperature Parts	I_B	—	640	5,000	pA	T_A = +125°C
Input Offset Current	I_{OS}	—	±1	—	pA	
Common-Mode Input Impedance	Z_{CM}	—	10^{13}||6	—	Ω||pF	
Differential Input Impedance	Z_{DIFF}	—	10^{13}||3	—	Ω||pF	
Common-Mode						
Common-Mode Input Range	V_{CMR}	V_{SS}-0.3	—	V_{DD}+0.3	V	
Common-Mode Rejection Ratio	CMRR	74	90	—	dB	V_{DD} = 5V, V_{CM} = -0.3V to 5.3V
	CMRR	70	85	—	dB	V_{DD} = 5V, V_{CM} = 3.0V to 5.3V
	CMRR	74	90	—	dB	V_{DD} = 5V, V_{CM} = -0.3V to 3.0V
Voltage Reference (MCP6021 and MCP6023 only)						
V_{REF} Accuracy (V_{REF} - V_{DD}/2)	ΔV_{REF}	-50	—	+50	mV	
V_{REF} Temperature Drift	$\Delta V_{REF}/\Delta T_A$	—	±100	—	µV/°C	T_A = -40°C to +125°C
Open Loop Gain						
DC Open Loop Gain (Large Signal)	A_{OL}	90	110	—	dB	V_{CM} = 0V, V_{OUT} = V_{SS}+0.3V to V_{DD}-0.3V

© 2003 Microchip Technology Inc.

DC CHARACTERISTICS (CONTINUED)

Electrical Specifications: Unless otherwise indicated, T_A = +25°C, V_{DD} = +2.5V to +5.5V, V_{SS} = GND, V_{CM} = V_{DD}/2, V_{OUT} ≈ V_{DD}/2 and R_L = 10 kΩ to V_{DD}/2.

Parameters	Sym	Min	Typ	Max	Units	Conditions
Output						
Maximum Output Voltage Swing	V_{OL}, V_{OH}	V_{SS}+15	—	V_{DD}-20	mV	0.5V output overdrive
Output Short Circuit Current	I_{SC}	—	±30	—	mA	
Power Supply						
Supply Voltage	V_S	2.5	—	5.5	V	
Quiescent Current per Amplifier	I_Q	0.5	1.0	1.35	mA	I_O = 0

AC CHARACTERISTICS

Electrical Specifications: Unless otherwise indicated, T_A = 25°C, V_{DD} = +2.5V to +5.5V, V_{SS} = GND, V_{CM} = V_{DD}/2, V_{OUT} ≈ V_{DD}/2, R_L = 10 kΩ to V_{DD}/2 and C_L = 60 pF.

Parameters	Sym	Min	Typ	Max	Units	Conditions
AC Response						
Gain Bandwidth Product	GBWP	—	10	—	MHz	
Phase Margin at Unity-Gain	PM	—	65	—	°	G = 1
Settling Time, 0.2%	t_{SETTLE}	—	250	—	ns	G = 1, V_{OUT} = 100 mV_{p-p}
Slew Rate	SR	—	7.0	—	V/µs	
Total Harmonic Distortion Plus Noise						
f = 1 kHz, G = 1	THD+N	—	0.00053	—	%	V_{OUT} = 0.25V + 3.25V, BW = 22 kHz
f = 1 kHz, G = 1, R_L = 600Ω@1 KHz	THD+N	—	0.00064	—	%	V_{OUT} = 0.25V + 3.25V, BW = 22 kHz
f = 1 kHz, G = +1 V/V	THD+N	—	0.0014	—	%	V_{OUT} = 4V_{P-P}, V_{DD} = 5.0V, BW = 22 kHz
f = 1 kHz, G = +10 V/V	THD+N	—	0.0009	—	%	V_{OUT} = 4V_{P-P}, V_{DD} = 5.0V, BW = 22 kHz
f = 1 kHz, G = +100 V/V	THD+N	—	0.005	—	%	V_{OUT} = 4V_{P-P}, V_{DD} = 5.0V, BW = 22 kHz
Noise						
Input Voltage Noise	E_{ni}	—	2.9	—	µVp-p	f = 0.1 Hz to 10 Hz
Input Voltage Noise Density	e_{ni}	—	8.7	—	nV/√Hz	f = 10 kHz
Input Current Noise Density	i_{ni}	—	3	—	fA/√Hz	f = 1 kHz

MCP6023 CHIP SELECT ($\overline{CS}$) CHARACTERISTICS

Electrical Specifications: Unless otherwise indicated, T_A = 25°C, V_{DD} = +2.5V to +5.5V, V_{SS} = GND, V_{CM} = V_{DD}/2, V_{OUT} ≈ V_{DD}/2, R_L = 10 kΩ to V_{DD}/2 and C_L = 60 pF.

Parameters	Sym	Min	Typ	Max	Units	Conditions
DC Characteristics						
$\overline{CS}$ Logic Threshold, Low	V_{IL}	0	—	0.2V_{DD}	V	
$\overline{CS}$ Input Current, Low	I_{CSL}	-1.0	0.01	—	µA	$\overline{CS}$ = V_{SS}
$\overline{CS}$ Logic Threshold, High	V_{IH}	0.8V_{DD}	—	V_{DD}	V	
$\overline{CS}$ Input Current, High	I_{CSH}	—	0.01	2.0	µA	$\overline{CS}$ = V_{DD}
$\overline{CS}$ Input High, GND Current	I_{SS}	—	0.05	2.0	µA	$\overline{CS}$ = V_{DD}
Amplifier Output Leakage	—	—	0.01	—	µA	$\overline{CS}$ = V_{DD}
Timing						
$\overline{CS}$ Low to Amplifier Output Turn-on Time	t_{ON}	—	2	10	µs	G = 1, V_{IN} = V_{SS}, $\overline{CS}$ = 0.2V_{DD} to V_{OUT} = 0.45V_{DD} time
$\overline{CS}$ High to Amplifier Output High-Z Turn-off Time	t_{OFF}	—	0.01	—	µs	G = 1, V_{IN} = V_{SS}, $\overline{CS}$ = 0.8V_{DD} to V_{OUT} = 0.05V_{DD} time
Hysteresis	V_{HYST}	—	0.6	—	V	Internal Switch

© 2003 Microchip Technology Inc.

TEMPERATURE CHARACTERISTICS

Electrical Specifications: Unless otherwise indicated, V_{DD} = +2.5V to +5.5V and V_{SS} = GND.						
Parameters	**Symbol**	**Min**	**Typ**	**Max**	**Units**	**Conditions**
Temperature Ranges						
Industrial Temperature Range	T_A	-40	—	+85	°C	
Extended Temperature Range	T_A	-40	—	+125	°C	
Operating Temperature Range	T_A	-40	—	+125	°C	**Note 1**
Storage Temperature Range	T_A	-65	—	+150	°C	
Thermal Package Resistances						
Thermal Resistance, 8L-PDIP	θ_{JA}	—	85	—	°C/W	
Thermal Resistance, 8L-SOIC	θ_{JA}	—	163	—	°C/W	
Thermal Resistance, 8L-TSSOP	θ_{JA}	—	124	—	°C/W	
Thermal Resistance, 14L-PDIP	θ_{JA}	—	70	—	°C/W	
Thermal Resistance, 14L-SOIC	θ_{JA}	—	120	—	°C/W	
Thermal Resistance, 14L-TSSOP	θ_{JA}	—	100	—	°C/W	

Note 1: The industrial temperature devices operate over this extended temperature range, but with reduced performance. In any case, the internal junction temperature (T_J) must not exceed the absolute maximum specification of 150°C.

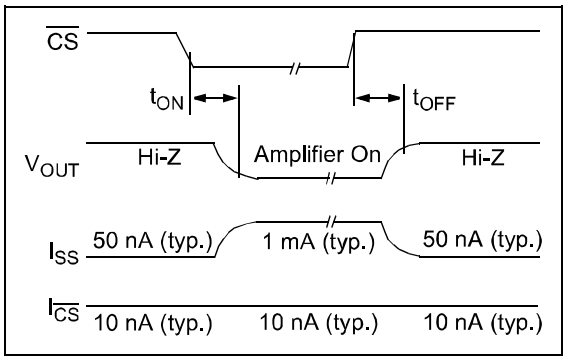

FIGURE 1-1: *Timing diagram for the $\overline{CS}$ pin on the MCP6023.*

© 2003 Microchip Technology Inc.

2.0 TYPICAL PERFORMANCE CURVES

Note:	The graphs and tables provided following this note are a statistical summary based on a limited number of samples and are provided for informational purposes only. The performance characteristics listed herein are not tested or guaranteed. In some graphs or tables, the data presented may be outside the specified operating range (e.g., outside specified power supply range) and therefore outside the warranted range.

Note: Unless otherwise indicated, T_A = +25°C, V_{DD} = +2.5V to +5.5V, V_{SS} = GND, V_{CM} = V_{DD}/2, R_L = 10 kΩ to V_{DD}/2, V_{OUT} ≈ V_{DD}/2 and C_L = 60 pF.

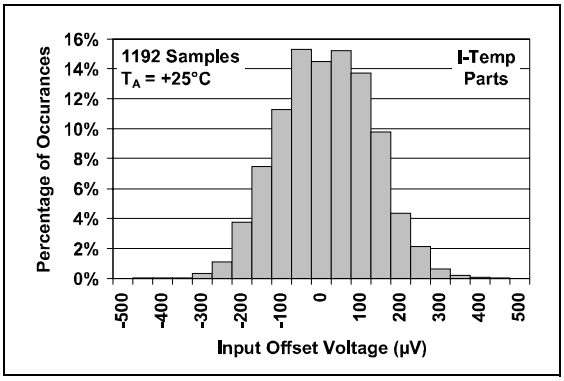

FIGURE 2-1: *Input Offset Voltage, (Industrial Temperature Parts).*

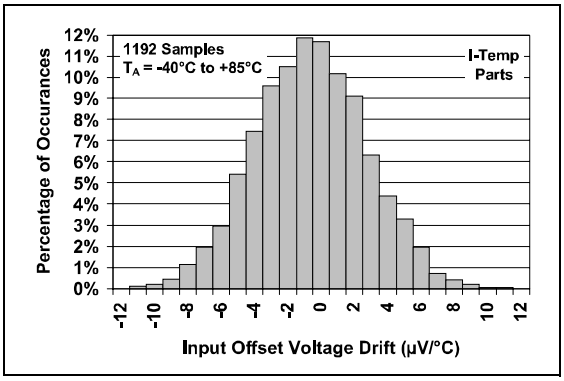

FIGURE 2-4: *Input Offset Voltage Drift, (Industrial Temperature Parts).*

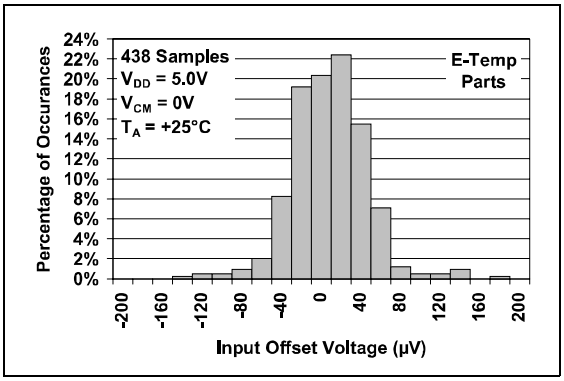

FIGURE 2-2: *Input Offset Voltage, (Extended Temperature Parts).*

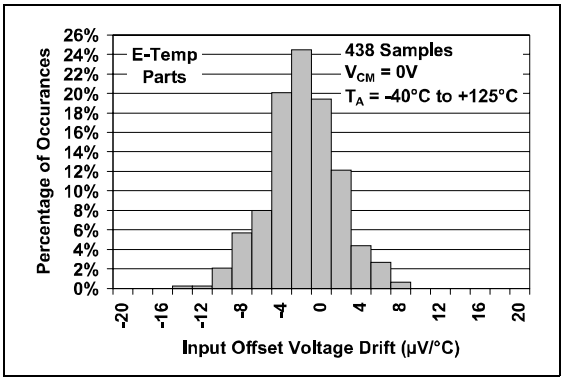

FIGURE 2-5: *Input Offset Voltage Drift, (Extended Temperature Parts).*

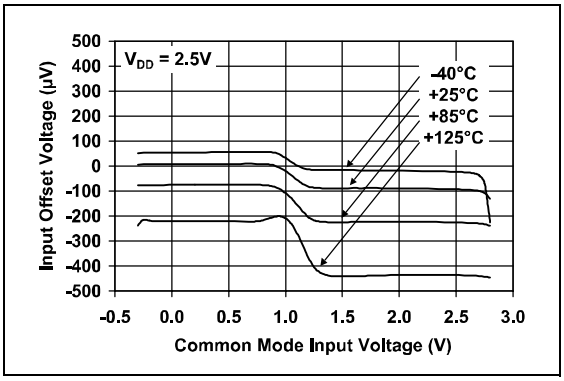

FIGURE 2-3: *Input Offset Voltage vs. Common Mode Input Voltage with V_{DD} = 2.5V.*

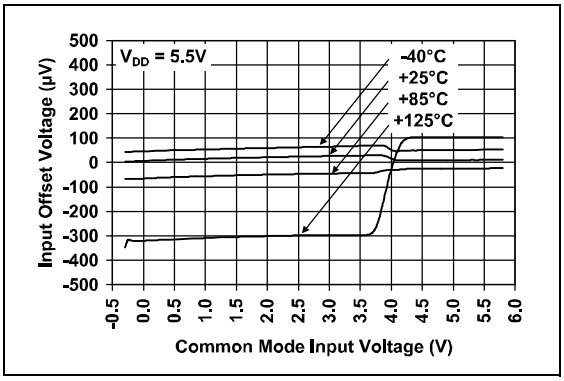

FIGURE 2-6: *Input Offset Voltage vs. Common Mode Input Voltage with V_{DD} = 5.5V.*

Note: Unless otherwise indicated, T_A = +25°C, V_{DD} = +2.5V to +5.5V, V_{SS} = GND, V_{CM} = V_{DD}/2, R_L = 10 kΩ to V_{DD}/2, V_{OUT} ≈ V_{DD}/2 and C_L = 60 pF.

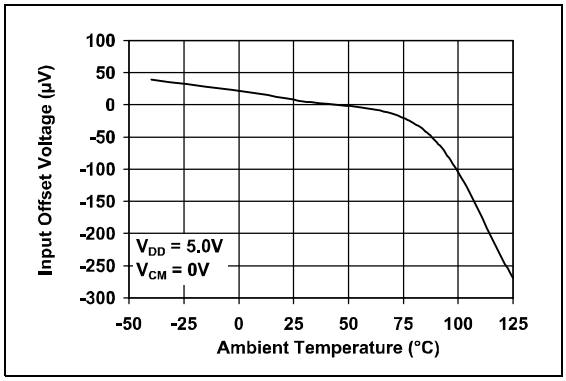

FIGURE 2-7: *Input Offset Voltage vs. Temperature.*

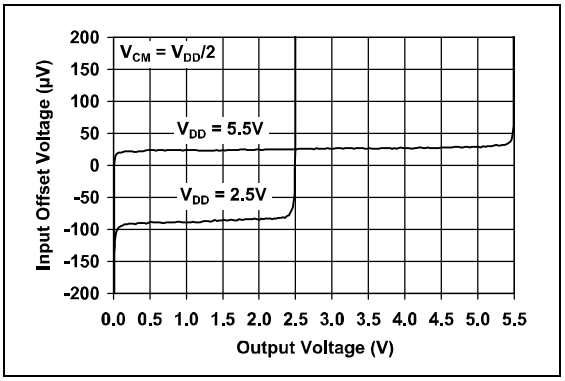

FIGURE 2-10: *Input Offset Voltage vs. Output Voltage.*

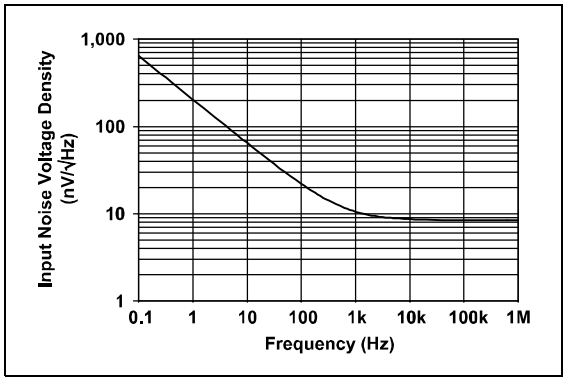

FIGURE 2-8: *Input Noise Voltage Density vs. Frequency.*

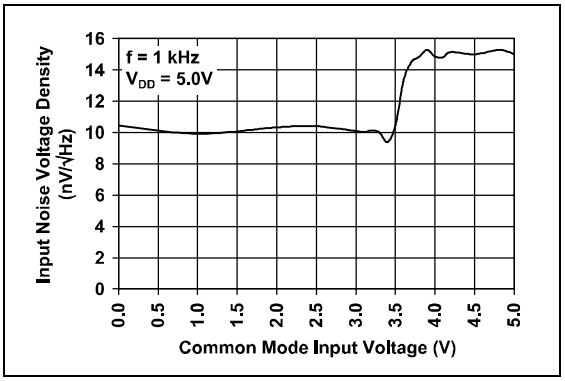

FIGURE 2-11: *Input Noise Voltage Density vs. Common Mode Input Voltage.*

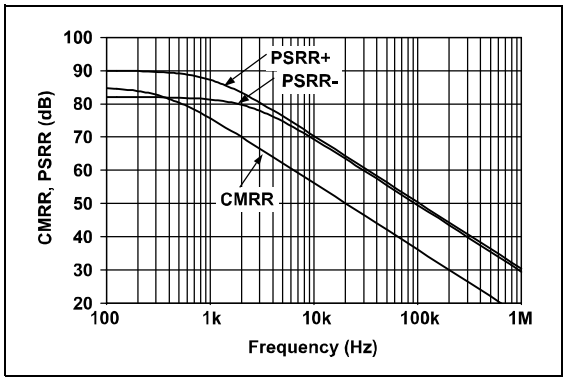

FIGURE 2-9: *Common Mode, Power Supply Rejection Ratios vs. Frequency.*

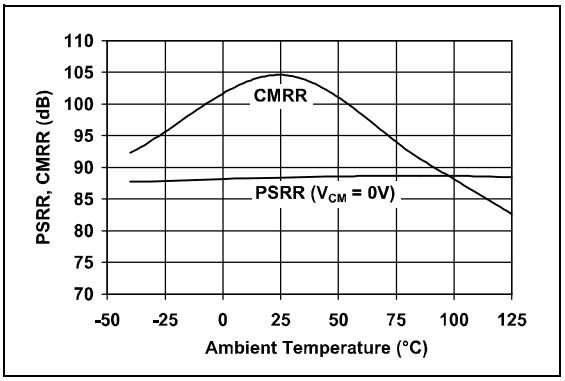

FIGURE 2-12: *Common Mode, Power Supply Rejection Ratios vs. Temperature.*

© 2003 Microchip Technology Inc.

Note: Unless otherwise indicated, T_A = +25°C, V_{DD} = +2.5V to +5.5V, V_{SS} = GND, V_{CM} = V_{DD}/2, R_L = 10 kΩ to V_{DD}/2, V_{OUT} ≈ V_{DD}/2 and C_L = 60 pF.

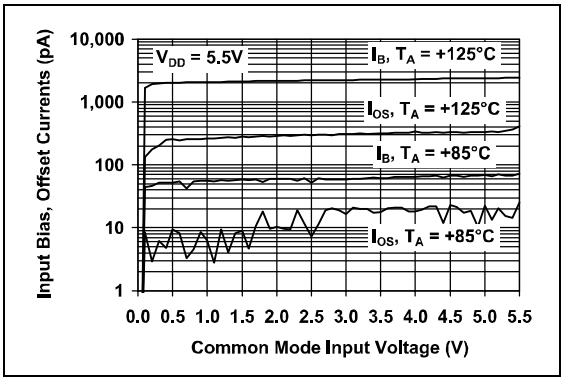

FIGURE 2-13: *Input Bias, Offset Currents vs. Common Mode Input Voltage.*

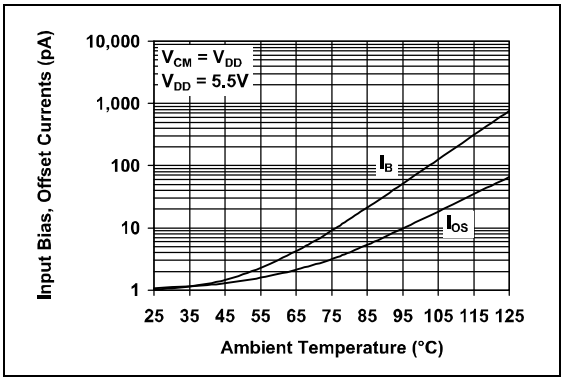

FIGURE 2-16: *Input Bias, Offset Currents vs. Temperature.*

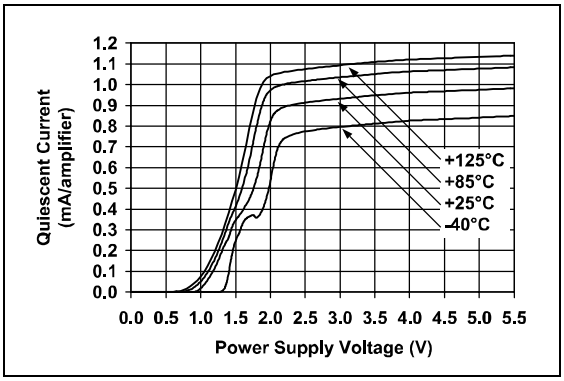

FIGURE 2-14: *Quiescent Current vs. Supply Voltage.*

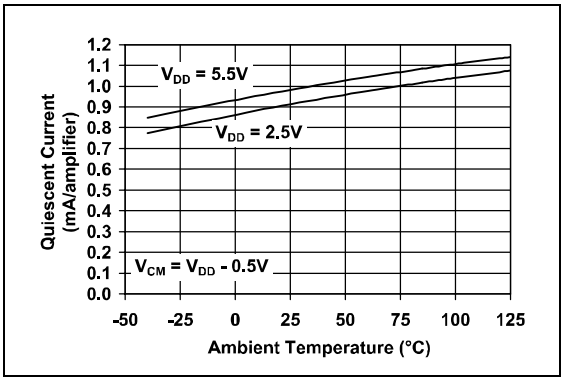

FIGURE 2-17: *Quiescent Current vs. Temperature.*

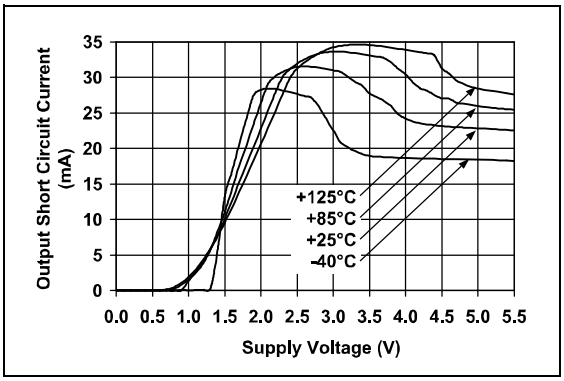

FIGURE 2-15: *Output Short-Circuit Current vs. Supply Voltage.*

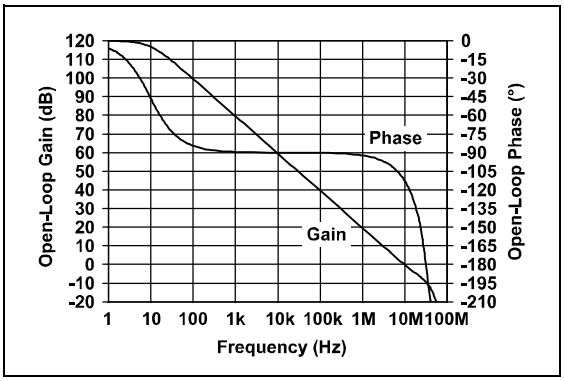

FIGURE 2-18: *Open-Loop Gain, Phase vs. Frequency.*

Note: Unless otherwise indicated, T_A = +25°C, V_{DD} = +2.5V to +5.5V, V_{SS} = GND, V_{CM} = V_{DD}/2, R_L = 10 kΩ to V_{DD}/2, V_{OUT} ≈ V_{DD}/2 and C_L = 60 pF.

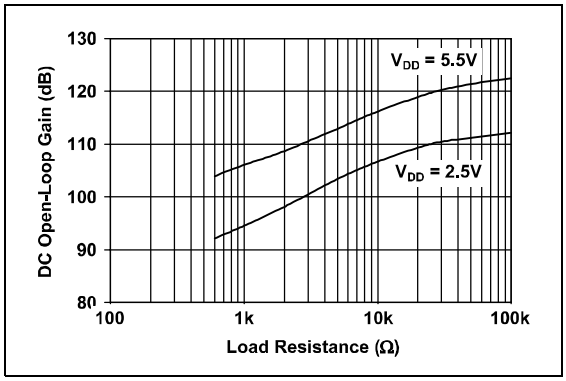

FIGURE 2-19: *DC Open-Loop Gain vs. Load Resistance.*

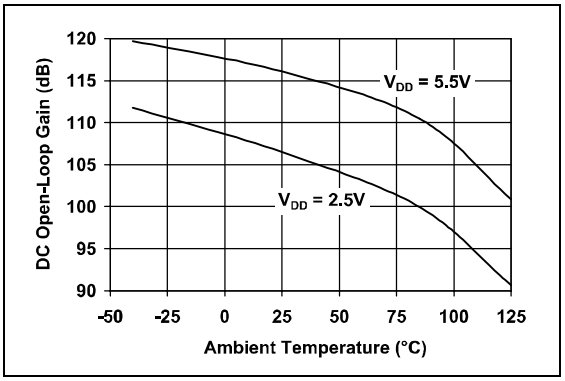

FIGURE 2-22: *DC Open-Loop Gain vs. Temperature.*

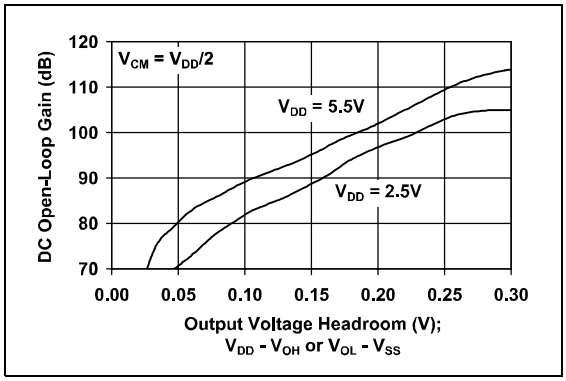

FIGURE 2-20: *Small Signal DC Open-Loop Gain vs. Output Voltage Headroom.*

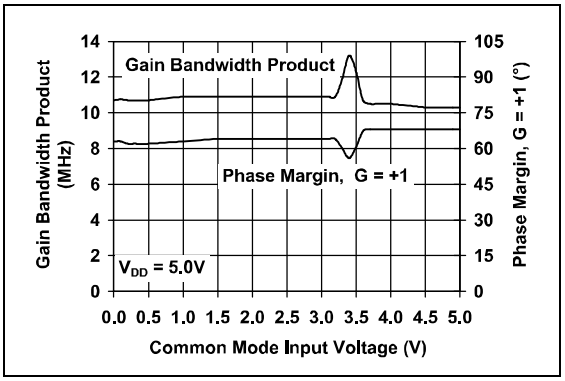

FIGURE 2-23: *Gain Bandwidth Product, Phase Margin vs. Common Mode Input Voltage.*

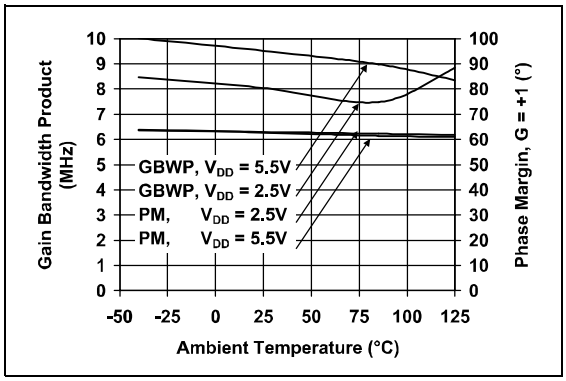

FIGURE 2-21: *Gain Bandwidth Product, Phase Margin vs. Temperature.*

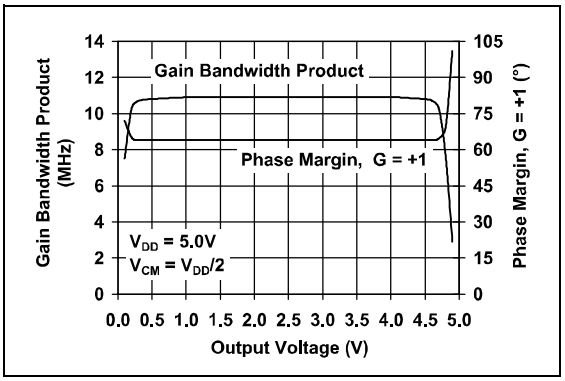

FIGURE 2-24: *Gain Bandwidth Product, Phase Margin vs. Output Voltage.*

© 2003 Microchip Technology Inc.

Note: Unless otherwise indicated, T_A = +25°C, V_{DD} = +2.5V to +5.5V, V_{SS} = GND, V_{CM} = V_{DD}/2, R_L = 10 kΩ to V_{DD}/2, V_{OUT} ≈ V_{DD}/2 and C_L = 60 pF.

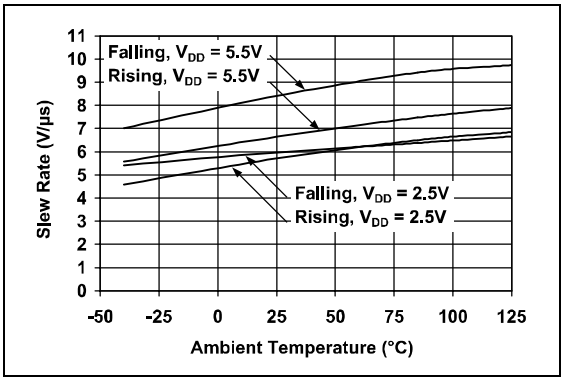

FIGURE 2-25: *Slew Rate vs. Temperature.*

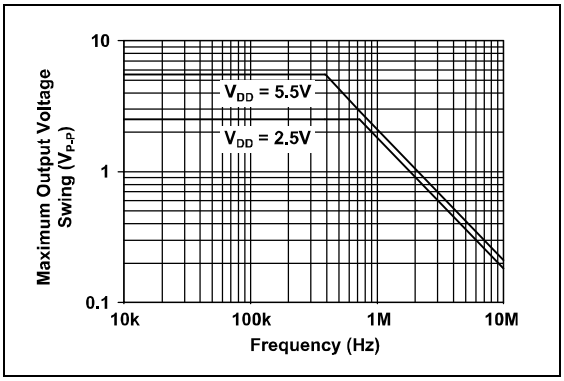

FIGURE 2-28: *Maximum Output Voltage Swing vs. Frequency.*

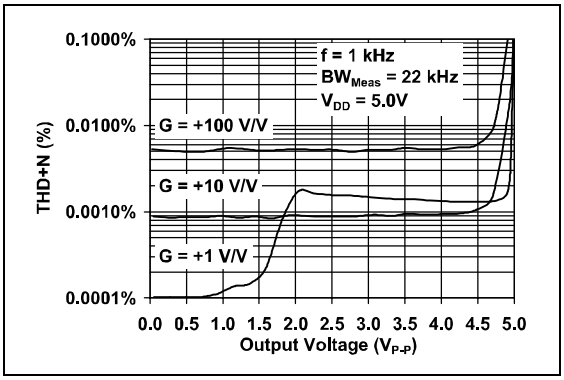

FIGURE 2-26: *Total Harmonic Distortion plus Noise vs. Output Voltage with f = 1 kHz.*

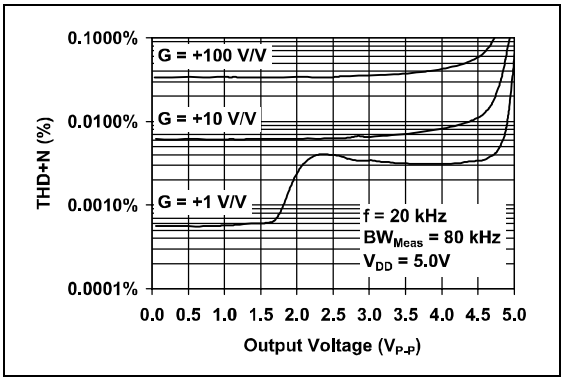

FIGURE 2-29: *Total Harmonic Distortion plus Noise vs. Output Voltage with f = 20 kHz.*

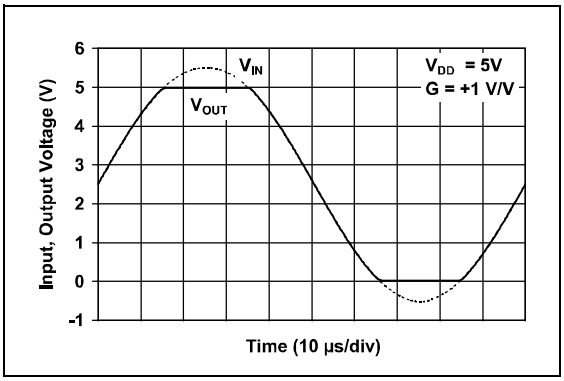

FIGURE 2-27: *The MCP6021/2/3/4 family shows no phase reversal under overdrive.*

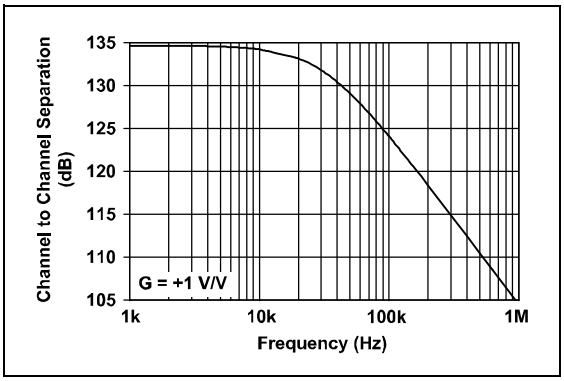

FIGURE 2-30: *Channel-to-Channel Separation vs. Frequency (MCP6022 and MCP6024 only).*

Note: Unless otherwise indicated, T_A = +25°C, V_{DD} = +2.5V to +5.5V, V_{SS} = GND, V_{CM} = V_{DD}/2, R_L = 10 kΩ to V_{DD}/2, $V_{OUT} \approx V_{DD}$/2 and C_L = 60 pF.

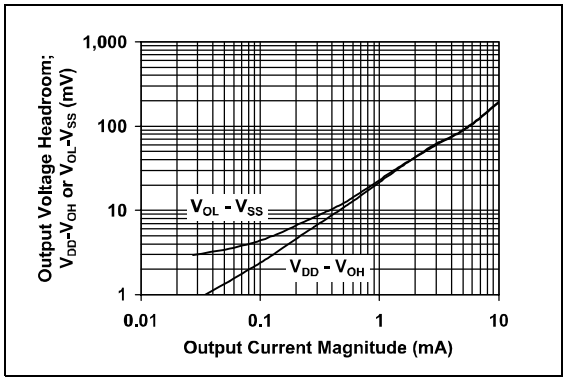

FIGURE 2-31: *Output Voltage Headroom vs. Output Current.*

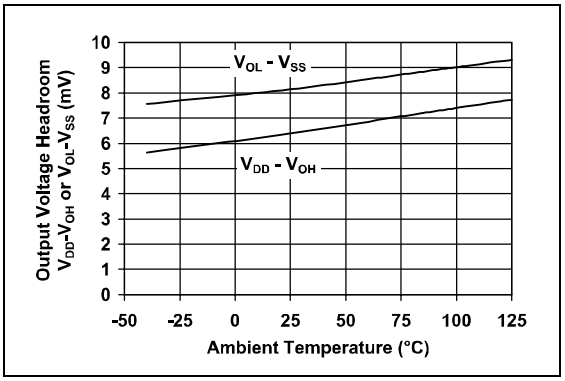

FIGURE 2-34: *Output Voltage Headroom vs. Temperature.*

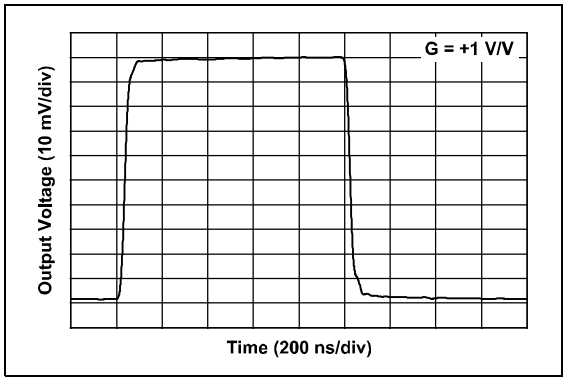

FIGURE 2-32: *Small-Signal Non-inverting Pulse Response.*

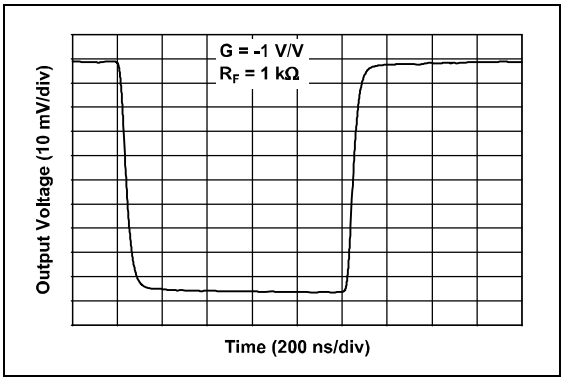

FIGURE 2-35: *Small-Signal Inverting Pulse Response.*

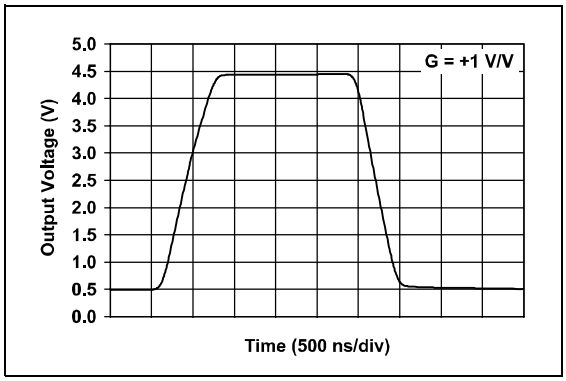

FIGURE 2-33: *Large-Signal Non-inverting Pulse Response.*

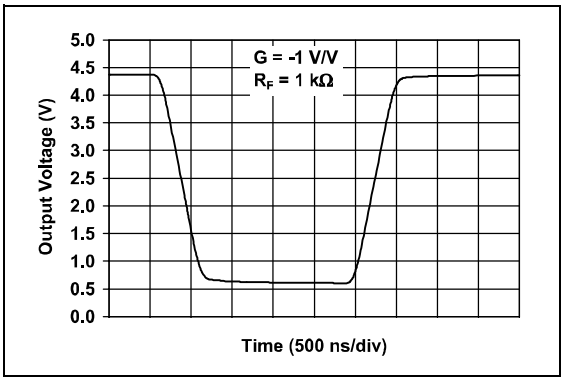

FIGURE 2-36: *Large-Signal Inverting Pulse Response.*

© 2003 Microchip Technology Inc.

Note: Unless otherwise indicated, T_A = +25°C, V_{DD} = +2.5V to +5.5V, V_{SS} = GND, V_{CM} = V_{DD}/2, R_L = 10 kΩ to V_{DD}/2, V_{OUT} ≈ V_{DD}/2 and C_L = 60 pF.

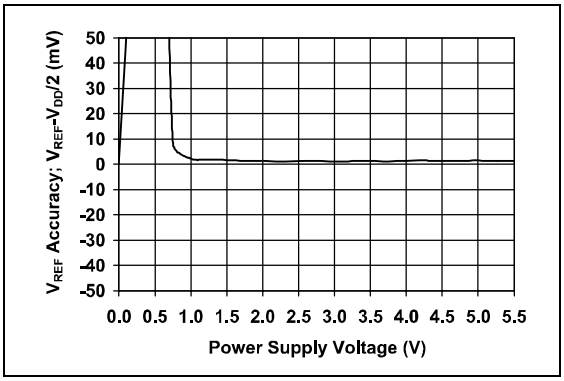

FIGURE 2-37: *V_{REF} Accuracy vs. Supply Voltage (MCP6021 and MCP6023 only).*

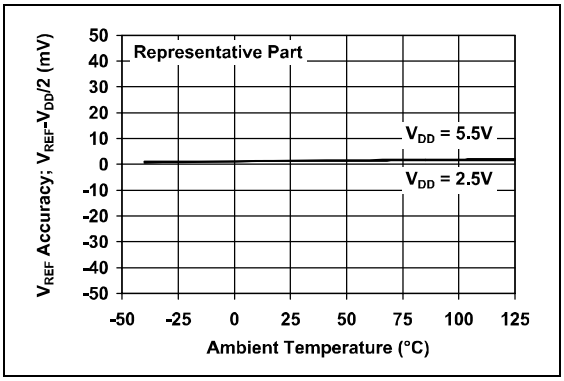

FIGURE 2-40: *V_{REF} Accuracy vs. Temperature (MCP6021 and MCP6023 only).*

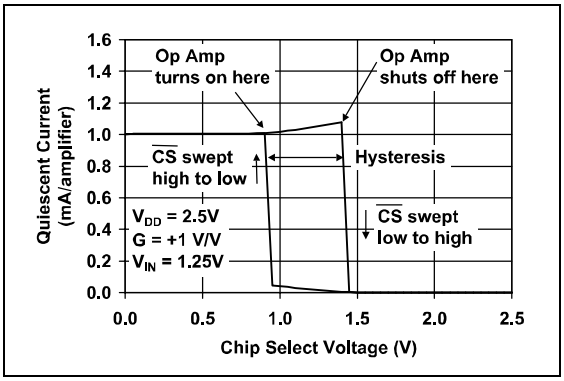

FIGURE 2-38: *Chip Select ($\overline{CS}$) Hysteresis (MCP6023 only) with V_{DD} = 2.5V.*

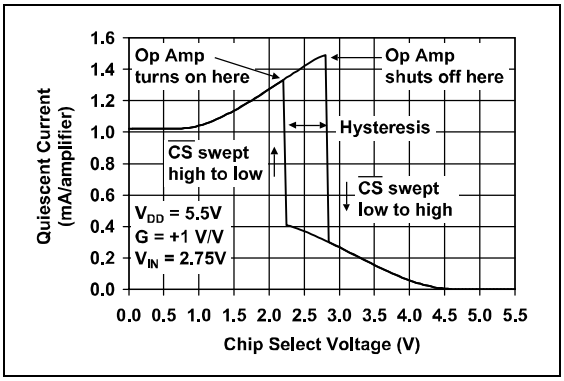

FIGURE 2-41: *Chip Select ($\overline{CS}$) Hysteresis (MCP6023 only) with V_{DD} = 5.5V.*

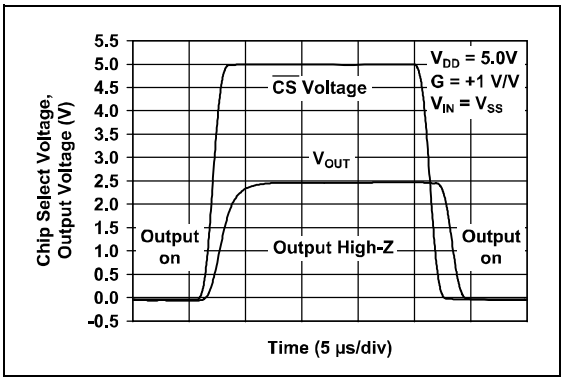

FIGURE 2-39: *Chip Select ($\overline{CS}$) to Amplifier Output Response Time (MCP6023 only).*

3.0 APPLICATIONS INFORMATION

The MCP6021/2/3/4 family of operational amplifiers are fabricated on Microchip's state-of-the-art CMOS process. They are unity-gain stable and suitable for a wide range of general-purpose applications.

3.1 Rail-to-Rail Input

The MCP6021/2/3/4 amplifier family is designed to not exhibit phase inversion when the input pins exceed the supply voltages. Figure 2-27 shows an input voltage exceeding both supplies with no resulting phase inversion.

The input stage of the MCP6021/2/3/4 family of devices uses two differential input stages in parallel; one operates at low common-mode input voltage (V_{CM}), while the other operates at high V_{CM}. With this topology, the device operates with V_{CM} up to 0.3V past either supply rail (V_{SS} - 0.3V to V_{DD} + 0.3V) at 25°C. The amplifier input behaves linearly as long as V_{CM} is kept within the specified V_{CMR} limits. The input offset voltage is measured at both $V_{CM} = V_{SS} - 0.3V$ and $V_{DD} + 0.3V$ to ensure proper operation.

Input voltages that exceed the input voltage range (V_{CMR}) can cause excessive current to flow in or out of the input pins. Current beyond ±2 mA introduces possible reliability problems. Thus, applications that exceed this rating must externally limit the input current with an input resistor (R_{IN}), as shown in Figure 3-1.

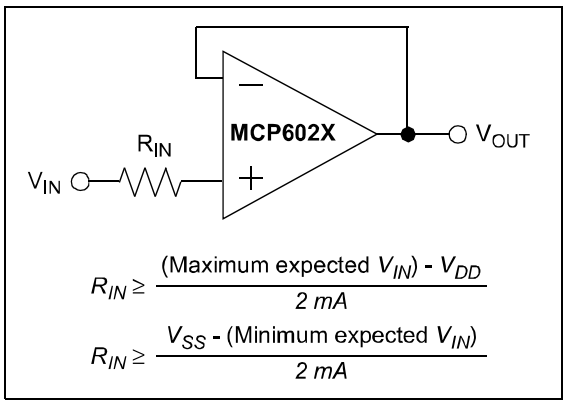

FIGURE 3-1: *R_{IN} limits the current flow into an input pin.*

3.2 Rail-to-Rail Output

The Maximum Output Voltage Swing is the maximum swing possible under a particular output load. According to the specification table, the output can reach within 20 mV of either supply rail when R_L = 10 kΩ. See Figure 2-31 and Figure 2-34 for more information concerning typical performance.

3.3 MCP6023 Chip Select ($\overline{CS}$)

The MCP6023 is a single amplifier with chip select ($\overline{CS}$). When $\overline{CS}$ is high, the supply current is less than 10 nA (typ) and travels from the $\overline{CS}$ pin to V_{SS}, with the amplifier output being put into a high-impedance state. When $\overline{CS}$ is low, the amplifier is enabled. If $\overline{CS}$ is left floating, the amplifier will not operate properly. Figure 1-1 and Figure 2-39 show the output voltage and supply current response to a $\overline{CS}$ pulse.

3.4 MCP6021 and MCP6023 Reference Voltage

The single op amps (MCP6021 and MCP6023) have an internal mid-supply reference voltage connected to the V_{REF} pin (see Figure 3-2). The MCP6021 has $\overline{CS}$ internally tied to V_{SS}, which always keeps the op amp on and always provides a mid-supply reference. With the MCP6023, taking the $\overline{CS}$ pin high conserves power by shutting down both the op amp and the V_{REF} circuitry. Taking the $\overline{CS}$ pin low turns on the op amp and V_{REF} circuitry.

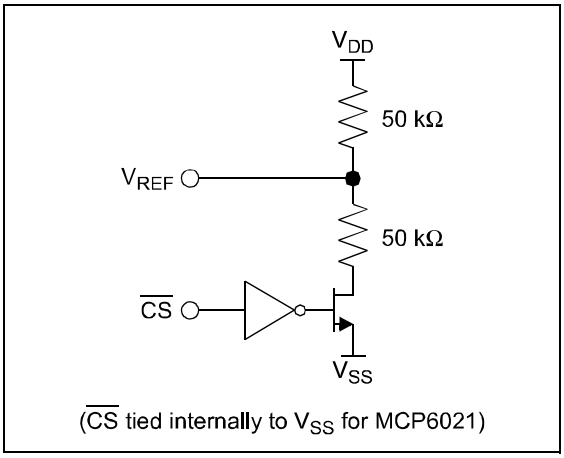

FIGURE 3-2: *Simplified internal V_{REF} circuit (MCP6021 and MCP6023 only).*

See Figure 3-3 for a non-inverting gain circuit using the internal mid-supply reference. The DC-blocking capacitor (C_B) also reduces noise by coupling the op amp input to the source.

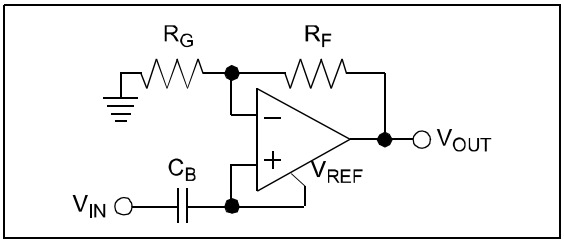

FIGURE 3-3: *Non-inverting gain circuit using V_{REF} (MCP6021 and MCP6023 only).*

© 2003 Microchip Technology Inc.

To use the internal mid-supply reference for an inverting gain circuit, connect the V_{REF} pin to the non-inverting input, as shown in Figure 3-4. The capacitor C_B helps reduce power supply noise on the output.

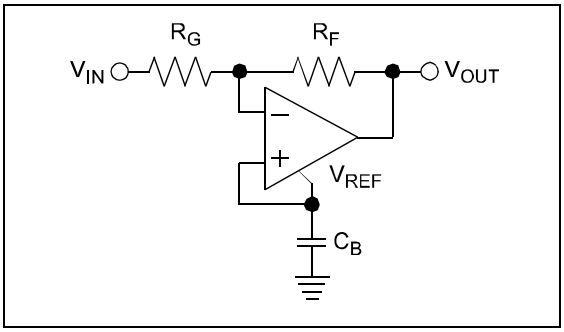

FIGURE 3-4: *Inverting gain circuit using V_{REF} (MCP6021 and MCP6023 only).*

If you don't need the mid-supply reference, leave the V_{REF} pin open.

3.5 Capacitive Loads

Driving large capacitive loads can cause stability problems for voltage feedback op amps. As the load capacitance increases, the feedback loop's phase margin decreases, and the closed loop bandwidth is reduced. This produces gain-peaking in the frequency response, with overshoot and ringing in the step response.

When driving large capacitive loads with these op amps (e.g., > 60 pF when G = +1), a small series resistor at the output (R_{ISO} in Figure 3-5) improves the feedback loop's phase margin (stability) by making the load resistive at higher frequencies. The bandwidth will be generally lower than the bandwidth with no capacitive load.

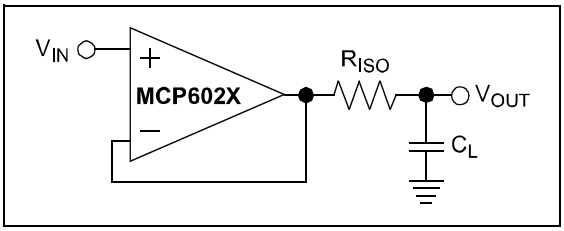

FIGURE 3-5: *Output resistor R_{ISO} stabilizes large capacitive loads.*

Figure 3-6 gives recommended R_{ISO} values for different capacitive laods and gains. The x-axis is the normalized load capacitance (C_L/G_N), where G_N is the circuit's noise gain. For non-inverting gains, G_N and the gain are equal. For inverting gains, G_N is 1+|Gain| (e.g., -1 V/V gives G_N = +2 V/V).

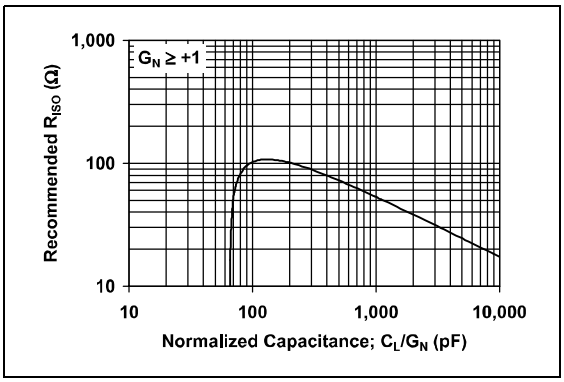

FIGURE 3-6: *Recommended R_{ISO} values for capacitive loads.*

After selecting R_{ISO} for your circuit, double-check the resulting frequency response peaking and step response overshoot. Evaluation on the bench and simulations with the MCP6021/2/3/4 Spice macro model are very helpful. Modify R_{ISO}'s value until the response is reasonable.

3.6 Supply Bypass

With this family of operational amplifiers, the power supply pin (V_{DD} for single supply) should have a local bypass capacitor (i.e., 0.01 µF to 0.1 µF) within 2 mm for good, high-frequency performance. It also needs a bulk capacitor (i.e., 1 µF or larger) within 100 mm to provide large, slow currents. This bulk capacitor can be shared with other parts.

3.7 PCB Surface Leakage

In applications where low input bias current is critical, PCB (printed circuit board) surface-leakage effects need to be considered. Surface leakage is caused by humidity, dust or other contamination on the board. Under low humidity conditions, a typical resistance between nearby traces is $10^{12}\Omega$. A 5V difference would cause 5 pA of current to flow, which is greater than the MCP6021/2/3/4 family's bias current at 25°C (1 pA, typ).

The easiest way to reduce surface leakage is to use a guard ring around sensitive pins (or traces). The guard ring is biased at the same voltage as the sensitive pin. An example of this type of layout is shown in Figure 3-7.

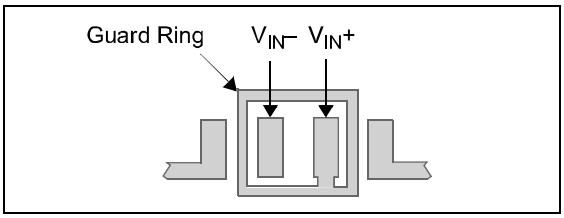

FIGURE 3-7: *Example guard ring layout.*

1. Inverting (Figure 3-7) and Transimpedance Gain Amplifiers (convert current to voltage, such as photo detectors).
   a. Connect the guard ring to the non-inverting input pin (V_{IN}+). This biases the guard ring to the same reference voltage as the op amp's input (e.g., V_{DD}/2 or ground).
   b. Connect the inverting pin (V_{IN}–) to the input with a wire that does not touch the PCB surface.
2. Non-inverting Gain and Unity-Gain Buffer
   a. Connect the guard ring to the inverting input pin (V_{IN}–); this biases the guard ring to the common mode input voltage.
   b. Connect the non-inverting pin (V_{IN}+) to the input with a wire that does not touch the PCB surface.

3.8 High-Speed PCB Layout

Due to their speed capabilities, a little extra care in the PCB (Printed Circuit Board) layout can make a significant difference in the performance of these op amps. Good PC board layout techniques will help you achieve the performance shown in the Electrical Characteristics and Typical Performance Curves, while also helping you minimize EMC (Electro-Magnetic Compatibility) issues.

Use a solid ground plane and connect the bypass local capacitor(s) to this plane with minimal length traces. This cuts down inductive and capacitive crosstalk.

Separate digital from analog, low-speed from high-speed and low power from high power. This will reduce interference.

Keep sensitive traces short and straight. Separating them from interfering components and traces. This is especially important for high-frequency (low rise-time) signals.

Sometimes it helps to place guard traces next to victim traces. They should be on both sides of the victim trace, and as close as possible. Connect the guard trace to ground plane at both ends, and in the middle for long traces.

Use coax cables (or low inductance wiring) to route signal and power to and from the PCB.

3.9 Typical Applications

3.9.1 A/D CONVERTER DRIVER AND ANTI-ALIASING FILTER

Figure 3-8 shows a third-order Butterworth filter that can be used as an A/D converter driver. It has a bandwidth of 20 kHz and a reasonable step response. It will work well for conversion rates of 80 ksps and greater (it has 29 dB attenuation at 60 kHz).

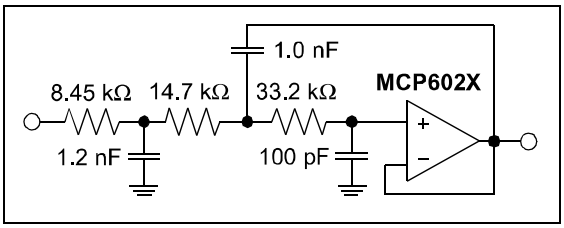

FIGURE 3-8: *A/D converter driver and anti-aliasing filter with a 20 kHz cutoff frequency.*

This filter can easily be adjusted to another bandwidth by multiplying all capacitors by the same factor. Alternatively, the resistors can all be scaled by another common factor to adjust the bandwidth.

3.9.2 OPTICAL DETECTOR AMPLIFIER

Figure 3-9 shows the MCP6021 op amp used as a transimpedance amplifier in a photo detector circuit. The photo detector looks like a capacitive current source, so the 100 kΩ resistor gains the input signal to a reasonable level. The 5.6 pF capacitor stabilizes this circuit and produces a flat frequency response with a bandwidth of 370 kHz.

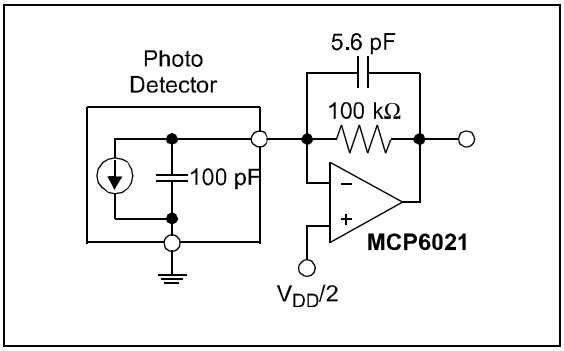

FIGURE 3-9: *Transimpedance amplifier for an optical detector.*

© 2003 Microchip Technology Inc.

4.0 DESIGN TOOLS

Microchip provides the basic design tools needed for the MCP6021/2/3/4 family of op amps.

4.1 SPICE Macro Model

The latest SPICE macro model for the MCP6021/2/3/4 op amps is available on our web site (www.microchip.com). This model is intended as an initial design tool that works well in the op amp's linear region of operation at room temperature. See the model file for information on its capabilities.

Bench testing is a very important part of any design and cannot be replaced with simulations. Also, simulation results using this macro model need to be validated by comparing them to the data sheet specs and plots.

4.2 FilterLab® Software

The FilterLab® software is an innovative tool that simplifies analog active filter (using op amps) design. Available at no cost from our web site (at www.microchip.com), the FilterLab software active filter design tool provides full schematic diagrams of the filter circuit with component values. It also outputs the filter circuit in SPICE format, which can be used with the Macro Model to simulate actual filter performance.

© 2003 Microchip Technology Inc.

5.0 PACKAGING INFORMATION

5.1 Package Marking Information

8-Lead PDIP (300 mil)

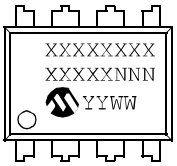

Example:

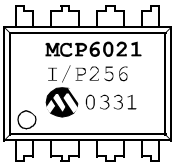

8-Lead SOIC (150 mil)

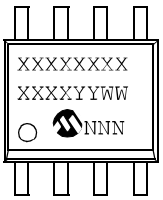

Example:

8-Lead TSSOP

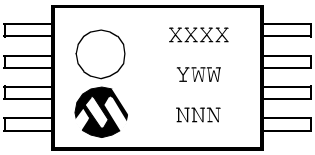

Example:

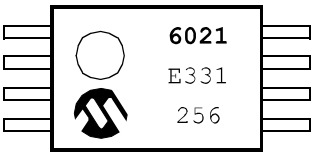

Legend:	XX...X	Customer specific information*
	Y	Year code (last digit of calendar year)
	YY	Year code (last 2 digits of calendar year)
	WW	Week code (week of January 1 is week ‘01’)
	NNN	Alphanumeric traceability code
Note:	In the event the full Microchip part number cannot be marked on one line, it will be carried over to the next line thus limiting the number of available characters for customer specific information.	

* Standard device marking consists of Microchip part number, year code, week code, and traceability code.

© 2003 Microchip Technology Inc.

Package Marking Information (Continued)

14-Lead PDIP (300 mil) **(MCP6024)**

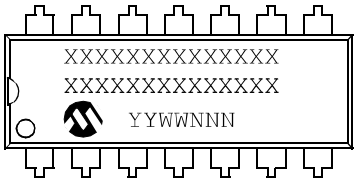

Example:

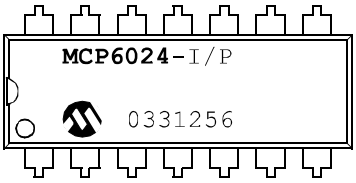

14-Lead SOIC (150 mil) **(MCP6024)**

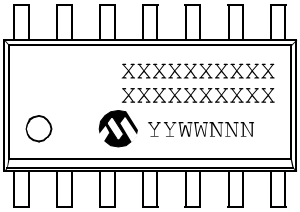

Example:

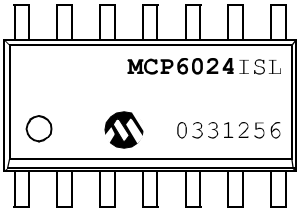

14-Lead TSSOP **(MCP6024)**

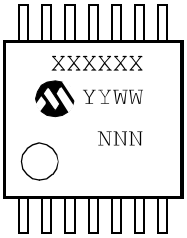

Example:

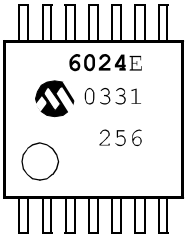

8-Lead Plastic Dual In-line (P) – 300 mil (PDIP)

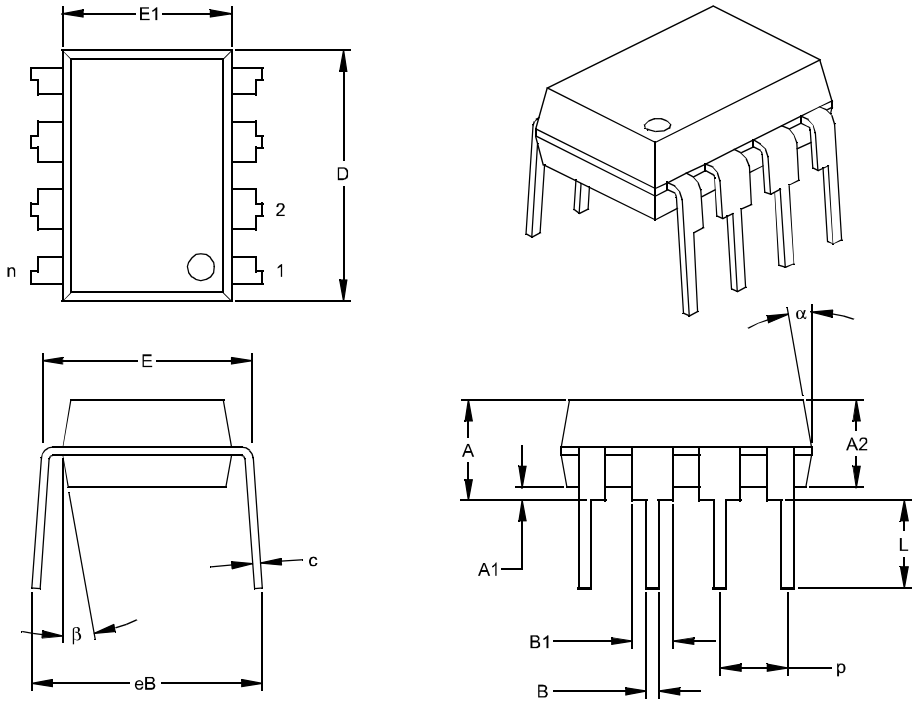

Units		INCHES*			MILLIMETERS		
Dimension Limits		MIN	NOM	MAX	MIN	NOM	MAX
Number of Pins	n		8			8	
Pitch	p		.100			2.54	
Top to Seating Plane	A	.140	.155	.170	3.56	3.94	4.32
Molded Package Thickness	A2	.115	.130	.145	2.92	3.30	3.68
Base to Seating Plane	A1	.015			0.38		
Shoulder to Shoulder Width	E	.300	.313	.325	7.62	7.94	8.26
Molded Package Width	E1	.240	.250	.260	6.10	6.35	6.60
Overall Length	D	.360	.373	.385	9.14	9.46	9.78
Tip to Seating Plane	L	.125	.130	.135	3.18	3.30	3.43
Lead Thickness	c	.008	.012	.015	0.20	0.29	0.38
Upper Lead Width	B1	.045	.058	.070	1.14	1.46	1.78
Lower Lead Width	B	.014	.018	.022	0.36	0.46	0.56
Overall Row Spacing §	eB	.310	.370	.430	7.87	9.40	10.92
Mold Draft Angle Top	α	5	10	15	5	10	15
Mold Draft Angle Bottom	β	5	10	15	5	10	15

* Controlling Parameter
§ Significant Characteristic

Notes:
Dimensions D and E1 do not include mold flash or protrusions. Mold flash or protrusions shall not exceed .010” (0.254mm) per side.
JEDEC Equivalent: MS-001
Drawing No. C04-018

© 2003 Microchip Technology Inc.

8-Lead Plastic Small Outline (SN) – Narrow, 150 mil (SOIC)

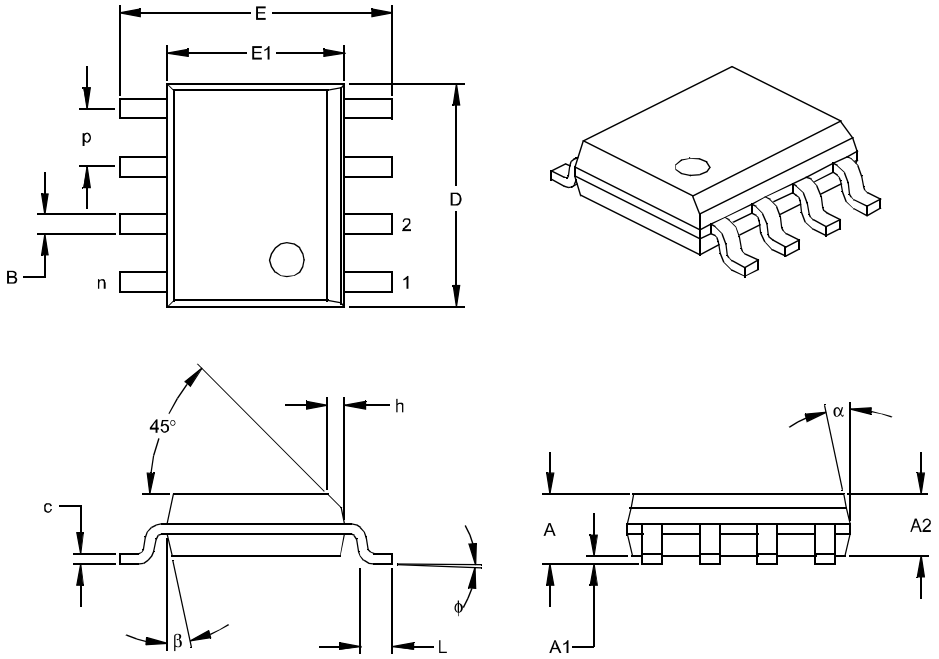

Units		INCHES*			MILLIMETERS		
Dimension Limits		MIN	NOM	MAX	MIN	NOM	MAX
Number of Pins	n		8			8	
Pitch	p		.050			1.27	
Overall Height	A	.053	.061	.069	1.35	1.55	1.75
Molded Package Thickness	A2	.052	.056	.061	1.32	1.42	1.55
Standoff §	A1	.004	.007	.010	0.10	0.18	0.25
Overall Width	E	.228	.237	.244	5.79	6.02	6.20
Molded Package Width	E1	.146	.154	.157	3.71	3.91	3.99
Overall Length	D	.189	.193	.197	4.80	4.90	5.00
Chamfer Distance	h	.010	.015	.020	0.25	0.38	0.51
Foot Length	L	.019	.025	.030	0.48	0.62	0.76
Foot Angle	φ	0	4	8	0	4	8
Lead Thickness	c	.008	.009	.010	0.20	0.23	0.25
Lead Width	B	.013	.017	.020	0.33	0.42	0.51
Mold Draft Angle Top	α	0	12	15	0	12	15
Mold Draft Angle Bottom	β	0	12	15	0	12	15

* Controlling Parameter
§ Significant Characteristic

Notes:
Dimensions D and E1 do not include mold flash or protrusions. Mold flash or protrusions shall not exceed .010" (0.254mm) per side.
JEDEC Equivalent: MS-012
Drawing No. C04-057

8-Lead Plastic Thin Shrink Small Outline (ST) – 4.4 mm (TSSOP)

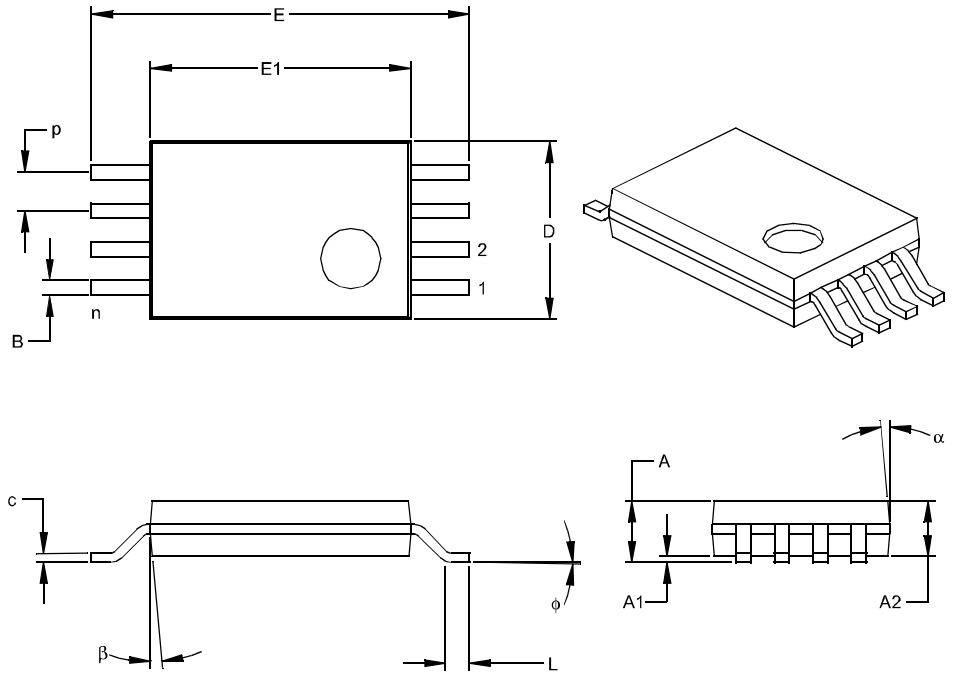

Units		INCHES			MILLIMETERS*		
Dimension Limits		MIN	NOM	MAX	MIN	NOM	MAX
Number of Pins	n		8			8	
Pitch	p		.026			0.65	
Overall Height	A			.043			1.10
Molded Package Thickness	A2	.033	.035	.037	0.85	0.90	0.95
Standoff §	A1	.002	.004	.006	0.05	0.10	0.15
Overall Width	E	.246	.251	.256	6.25	6.38	6.50
Molded Package Width	E1	.169	.173	.177	4.30	4.40	4.50
Molded Package Length	D	.114	.118	.122	2.90	3.00	3.10
Foot Length	L	.020	.024	.028	0.50	0.60	0.70
Foot Angle	φ	0	4	8	0	4	8
Lead Thickness	c	.004	.006	.008	0.09	0.15	0.20
Lead Width	B	.007	.010	.012	0.19	0.25	0.30
Mold Draft Angle Top	α	0	5	10	0	5	10
Mold Draft Angle Bottom	β	0	5	10	0	5	10

* Controlling Parameter
§ Significant Characteristic

Notes:
Dimensions D and E1 do not include mold flash or protrusions. Mold flash or protrusions shall not exceed .005” (0.127mm) per side.
JEDEC Equivalent: MO-153
Drawing No. C04-086

© 2003 Microchip Technology Inc.

14-Lead Plastic Dual In-line (P) – 300 mil (PDIP)

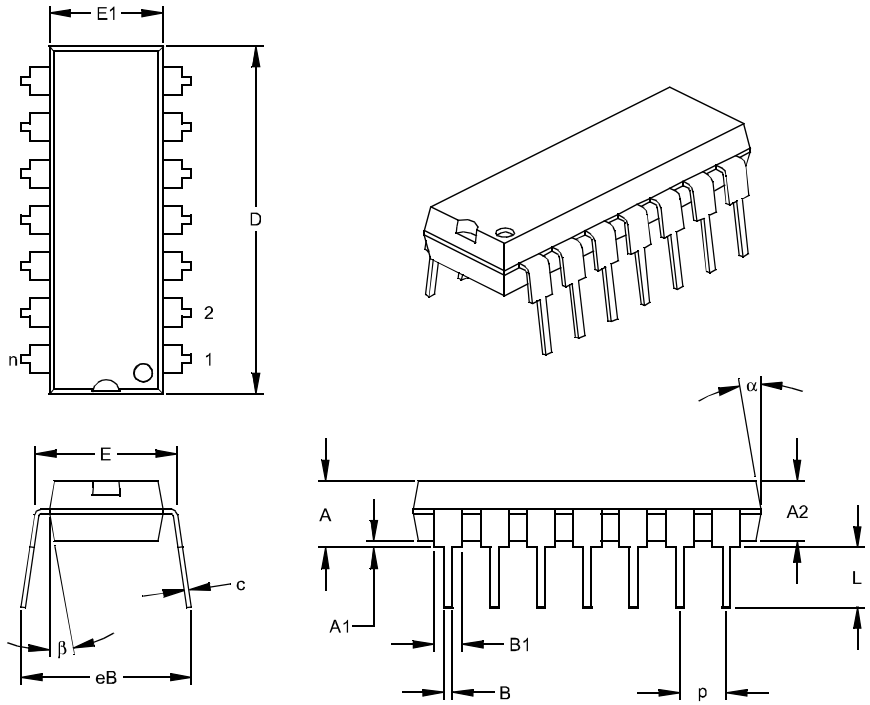

Units		INCHES*			MILLIMETERS		
Dimension Limits		MIN	NOM	MAX	MIN	NOM	MAX
Number of Pins	n		14			14	
Pitch	p		.100			2.54	
Top to Seating Plane	A	.140	.155	.170	3.56	3.94	4.32
Molded Package Thickness	A2	.115	.130	.145	2.92	3.30	3.68
Base to Seating Plane	A1	.015			0.38		
Shoulder to Shoulder Width	E	.300	.313	.325	7.62	7.94	8.26
Molded Package Width	E1	.240	.250	.260	6.10	6.35	6.60
Overall Length	D	.740	.750	.760	18.80	19.05	19.30
Tip to Seating Plane	L	.125	.130	.135	3.18	3.30	3.43
Lead Thickness	c	.008	.012	.015	0.20	0.29	0.38
Upper Lead Width	B1	.045	.058	.070	1.14	1.46	1.78
Lower Lead Width	B	.014	.018	.022	0.36	0.46	0.56
Overall Row Spacing §	eB	.310	.370	.430	7.87	9.40	10.92
Mold Draft Angle Top	α	5	10	15	5	10	15
Mold Draft Angle Bottom	β	5	10	15	5	10	15

* Controlling Parameter
§ Significant Characteristic
Notes:
Dimensions D and E1 do not include mold flash or protrusions. Mold flash or protrusions shall not exceed .010" (0.254mm) per side.
JEDEC Equivalent: MS-001
Drawing No. C04-005

14-Lead Plastic Small Outline (SL) – Narrow, 150 mil (SOIC)

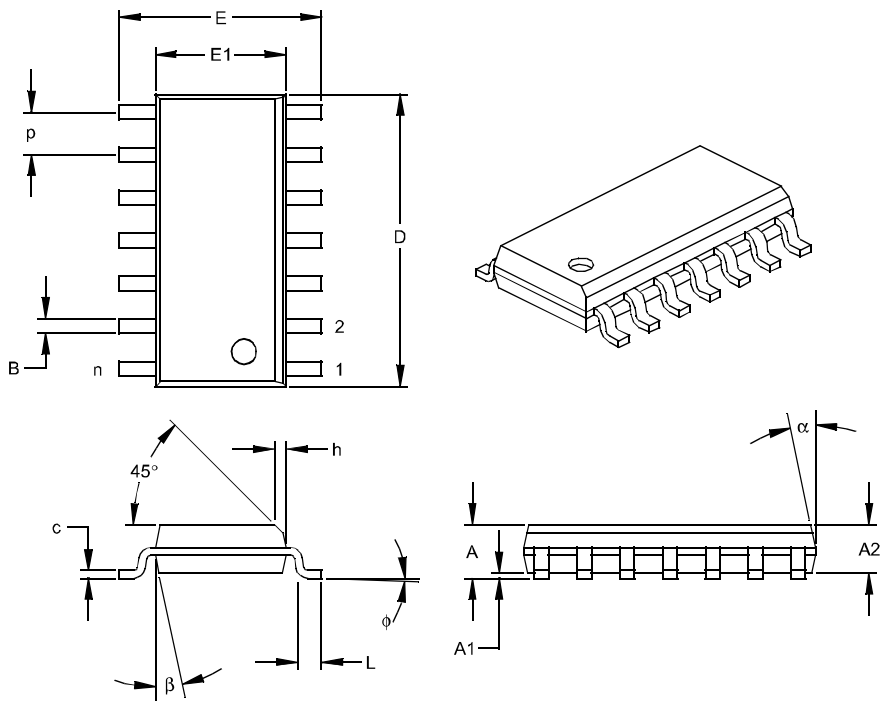

Units		INCHES*			MILLIMETERS		
Dimension Limits		MIN	NOM	MAX	MIN	NOM	MAX
Number of Pins	n		14			14	
Pitch	p		.050			1.27	
Overall Height	A	.053	.061	.069	1.35	1.55	1.75
Molded Package Thickness	A2	.052	.056	.061	1.32	1.42	1.55
Standoff §	A1	.004	.007	.010	0.10	0.18	0.25
Overall Width	E	.228	.236	.244	5.79	5.99	6.20
Molded Package Width	E1	.150	.154	.157	3.81	3.90	3.99
Overall Length	D	.337	.342	.347	8.56	8.69	8.81
Chamfer Distance	h	.010	.015	.020	0.25	0.38	0.51
Foot Length	L	.016	.033	.050	0.41	0.84	1.27
Foot Angle	φ	0	4	8	0	4	8
Lead Thickness	c	.008	.009	.010	0.20	0.23	0.25
Lead Width	B	.014	.017	.020	0.36	0.42	0.51
Mold Draft Angle Top	α	0	12	15	0	12	15
Mold Draft Angle Bottom	β	0	12	15	0	12	15

* Controlling Parameter
§ Significant Characteristic

Notes:
Dimensions D and E1 do not include mold flash or protrusions. Mold flash or protrusions shall not exceed .010” (0.254mm) per side.
JEDEC Equivalent: MS-012
Drawing No. C04-065

© 2003 Microchip Technology Inc.

14-Lead Plastic Thin Shrink Small Outline (ST) – 4.4 mm (TSSOP)

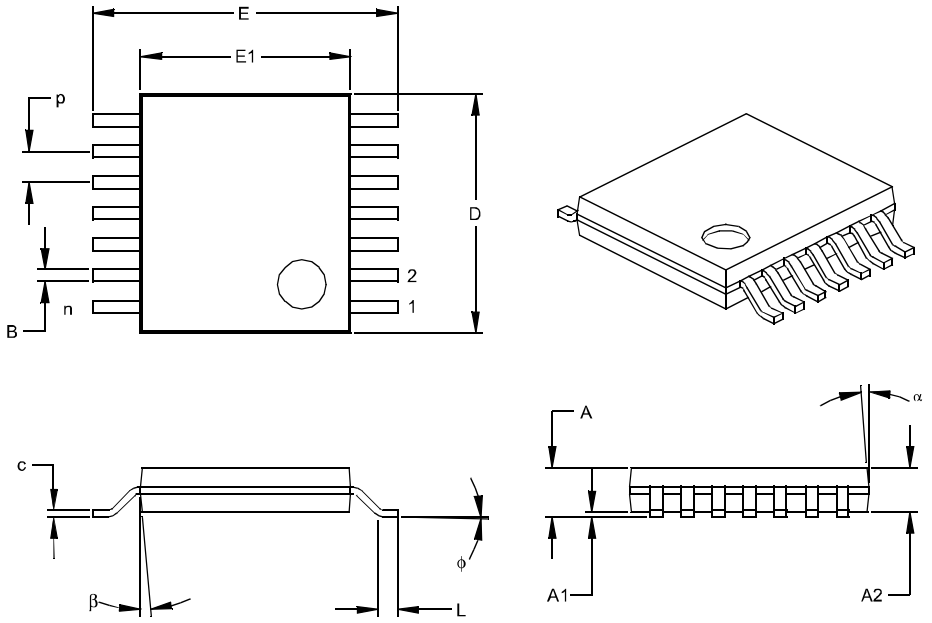

Units		INCHES			MILLIMETERS*		
Dimension Limits		MIN	NOM	MAX	MIN	NOM	MAX
Number of Pins	n		14			14	
Pitch	p		.026			0.65	
Overall Height	A			.043			1.10
Molded Package Thickness	A2	.033	.035	.037	0.85	0.90	0.95
Standoff §	A1	.002	.004	.006	0.05	0.10	0.15
Overall Width	E	.246	.251	.256	6.25	6.38	6.50
Molded Package Width	E1	.169	.173	.177	4.30	4.40	4.50
Molded Package Length	D	.193	.197	.201	4.90	5.00	5.10
Foot Length	L	.020	.024	.028	0.50	0.60	0.70
Foot Angle	φ	0	4	8	0	4	8
Lead Thickness	c	.004	.006	.008	0.09	0.15	0.20
Lead Width	B	.007	.010	.012	0.19	0.25	0.30
Mold Draft Angle Top	α	0	5	10	0	5	10
Mold Draft Angle Bottom	β	0	5	10	0	5	10

* Controlling Parameter
§ Significant Characteristic

Notes:
Dimensions D and E1 do not include mold flash or protrusions. Mold flash or protrusions shall not exceed .005" (0.127mm) per side.
JEDEC Equivalent: MO-153
Drawing No. C04-087

NOTES:

© 2003 Microchip Technology Inc.

PRODUCT IDENTIFICATION SYSTEM

To order or obtain information, e.g., on pricing or delivery, refer to the factory or the listed sales office.

PART NO.	X	/XX
Device	Temperature Range	Package

Device:	MCP6021	CMOS Single Op Amp
	MCP6021T	CMOS Single Op Amp (Tape and Reel for SOIC, TSSOP)
	MCP6022	CMOS Dual Op Amp
	MCP6022T	CMOS Dual Op Amp (Tape and Reel for SOIC and TSSOP)
	MCP6023	CMOS Single Op Amp w/ $\overline{CS}$ Function
	MCP6023T	CMOS Single Op Amp w/ $\overline{CS}$ Function (Tape and Reel for SOIC and TSSOP)
	MCP6024	CMOS Quad Op Amp
	MCP6024T	CMOS Quad Op Amp (Tape and Reel for SOIC and TSSOP)
Temperature Range:	I	= -40°C to +85°C
	E	= -40×C to +125×C
Package:	P	= Plastic DIP (300 mil Body), 8-lead, 14-lead
	SN	= Plastic SOIC (150mil Body), 8-lead
	SL	= Plastic SOIC (150 mil Body), 14-lead
	ST	= Plastic TSSOP, 8-lead, 14-lead

Examples:

a)	MCP6021-I/P:	Industrial temperature, PDIP package.
b)	MCP6021-E/P:	Extended temperature, PDIP package.
c)	MCP6021-E/SN:	Extended temperature, SOIC package.
a)	MCP6022-I/P:	Industrial temperature, PDIP package.
b)	MCP6022-E/P:	Extended temperature, PDIP package.
c)	MCP6022T-E/ST:	Tape and Reel, Extended temperature, TSSOP package.
a)	MCP6023-I/P:	Industrial temperature, PDIP package.
b)	MCP6023-E/P:	Extended temperature, PDIP package.
c)	MCP6023-E/SN:	Extended temperature, SOIC package.
a)	MCP6024-I/SL:	Industrial temperature, SOIC package.
b)	MCP6024-E/SL:	Extended temperature, SOIC package.
c)	MCP6024T-E/ST:	Tape and Reel, Extended temperature, TSSOP package.

Sales and Support

Data Sheets
Products supported by a preliminary Data Sheet may have an errata sheet describing minor operational differences and recommended workarounds. To determine if an errata sheet exists for a particular device, please contact one of the following:

1. Your local Microchip sales office
2. The Microchip Corporate Literature Center U.S. FAX: (480) 792-7277
3. The Microchip Worldwide Site (www.microchip.com)

Please specify which device, revision of silicon and Data Sheet (include Literature #) you are using.

Customer Notification System
Register on our web site (www.microchip.com/cn) to receive the most current information on our products.

NOTES:

© 2003 Microchip Technology Inc.

Note the following details of the code protection feature on Microchip devices:

- Microchip products meet the specification contained in their particular Microchip Data Sheet.
- Microchip believes that its family of products is one of the most secure families of its kind on the market today, when used in the intended manner and under normal conditions.
- There are dishonest and possibly illegal methods used to breach the code protection feature. All of these methods, to our knowledge, require using the Microchip products in a manner outside the operating specifications contained in Microchip's Data Sheets. Most likely, the person doing so is engaged in theft of intellectual property.
- Microchip is willing to work with the customer who is concerned about the integrity of their code.
- Neither Microchip nor any other semiconductor manufacturer can guarantee the security of their code. Code protection does not mean that we are guaranteeing the product as "unbreakable."

Code protection is constantly evolving. We at Microchip are committed to continuously improving the code protection features of our products. Attempts to break microchip's code protection feature may be a violation of the Digital Millennium Copyright Act. If such acts allow unauthorized access to your software or other copyrighted work, you may have a right to sue for relief under that Act.

Information contained in this publication regarding device applications and the like is intended through suggestion only and may be superseded by updates. It is your responsibility to ensure that your application meets with your specifications. No representation or warranty is given and no liability is assumed by Microchip Technology Incorporated with respect to the accuracy or use of such information, or infringement of patents or other intellectual property rights arising from such use or otherwise. Use of Microchip's products as critical components in life support systems is not authorized except with express written approval by Microchip. No licenses are conveyed, implicitly or otherwise, under any intellectual property rights.

Trademarks

The Microchip name and logo, the Microchip logo, Accuron, dsPIC, KEELOQ, MPLAB, PIC, PICmicro, PICSTART, PRO MATE and PowerSmart are registered trademarks of Microchip Technology Incorporated in the U.S.A. and other countries.

AmpLab, FilterLab, microID, MXDEV, MXLAB, PICMASTER, SEEVAL and The Embedded Control Solutions Company are registered trademarks of Microchip Technology Incorporated in the U.S.A.

Application Maestro, dsPICDEM, dsPICDEM.net, ECAN, ECONOMONITOR, FanSense, FlexROM, fuzzyLAB, In-Circuit Serial Programming, ICSP, ICEPIC, microPort, Migratable Memory, MPASM, MPLIB, MPLINK, MPSIM, PICkit, PICDEM, PICDEM.net, PowerCal, PowerInfo, PowerMate, PowerTool, rfLAB, rfPIC, Select Mode, SmartSensor, SmartShunt, SmartTel and Total Endurance are trademarks of Microchip Technology Incorporated in the U.S.A. and other countries.

Serialized Quick Turn Programming (SQTP) is a service mark of Microchip Technology Incorporated in the U.S.A.

All other trademarks mentioned herein are property of their respective companies.

© 2003, Microchip Technology Incorporated, Printed in the U.S.A., All Rights Reserved.

Printed on recycled paper.

Microchip received QS-9000 quality system certification for its worldwide headquarters, design and wafer fabrication facilities in Chandler and Tempe, Arizona in July 1999 and Mountain View, California in March 2002. The Company's quality system processes and procedures are QS-9000 compliant for its PICmicro® 8-bit MCUs, KEELOQ® code hopping devices, Serial EEPROMs, microperipherals, non-volatile memory and analog products. In addition, Microchip's quality system for the design and manufacture of development systems is ISO 9001 certified.

WORLDWIDE SALES AND SERVICE

AMERICAS

Corporate Office
2355 West Chandler Blvd.
Chandler, AZ 85224-6199
Tel: 480-792-7200
Fax: 480-792-7277
Technical Support: 480-792-7627
Web Address: http://www.microchip.com

Atlanta
3780 Mansell Road, Suite 130
Alpharetta, GA 30022
Tel: 770-640-0034
Fax: 770-640-0307

Boston
2 Lan Drive, Suite 120
Westford, MA 01886
Tel: 978-692-3848
Fax: 978-692-3821

Chicago
333 Pierce Road, Suite 180
Itasca, IL 60143
Tel: 630-285-0071
Fax: 630-285-0075

Dallas
4570 Westgrove Drive, Suite 160
Addison, TX 75001
Tel: 972-818-7423
Fax: 972-818-2924

Detroit
Tri-Atria Office Building
32255 Northwestern Highway, Suite 190
Farmington Hills, MI 48334
Tel: 248-538-2250
Fax: 248-538-2260

Kokomo
2767 S. Albright Road
Kokomo, IN 46902
Tel: 765-864-8360
Fax: 765-864-8387

Los Angeles
18201 Von Karman, Suite 1090
Irvine, CA 92612
Tel: 949-263-1888
Fax: 949-263-1338

Phoenix
2355 West Chandler Blvd.
Chandler, AZ 85224-6199
Tel: 480-792-7966
Fax: 480-792-4338

San Jose
2107 North First Street, Suite 590
San Jose, CA 95131
Tel: 408-436-7950
Fax: 408-436-7955

Toronto
6285 Northam Drive, Suite 108
Mississauga, Ontario L4V 1X5, Canada
Tel: 905-673-0699
Fax: 905-673-6509

ASIA/PACIFIC

Australia
Suite 22, 41 Rawson Street
Epping 2121, NSW
Australia
Tel: 61-2-9868-6733
Fax: 61-2-9868-6755

China - Beijing
Unit 915
Bei Hai Wan Tai Bldg.
No. 6 Chaoyangmen Beidajie
Beijing, 100027, No. China
Tel: 86-10-85282100
Fax: 86-10-85282104

China - Chengdu
Rm. 2401-2402, 24th Floor,
Ming Xing Financial Tower
No. 88 TIDU Street
Chengdu 610016, China
Tel: 86-28-86766200
Fax: 86-28-86766599

China - Fuzhou
Unit 28F, World Trade Plaza
No. 71 Wusi Road
Fuzhou 350001, China
Tel: 86-591-7503506
Fax: 86-591-7503521

China - Hong Kong SAR
Unit 901-6, Tower 2, Metroplaza
223 Hing Fong Road
Kwai Fong, N.T., Hong Kong
Tel: 852-2401-1200
Fax: 852-2401-3431

China - Shanghai
Room 701, Bldg. B
Far East International Plaza
No. 317 Xian Xia Road
Shanghai, 200051
Tel: 86-21-6275-5700
Fax: 86-21-6275-5060

China - Shenzhen
Rm. 1812, 18/F, Building A, United Plaza
No. 5022 Binhe Road, Futian District
Shenzhen 518033, China
Tel: 86-755-82901380
Fax: 86-755-8295-1393

China - Shunde
Room 401, Hongjian Building
No. 2 Fengxiangnan Road, Ronggui Town
Shunde City, Guangdong 528303, China
Tel: 86-765-8395507 Fax: 86-765-8395571

China - Qingdao
Rm. B505A, Fullhope Plaza,
No. 12 Hong Kong Central Rd.
Qingdao 266071, China
Tel: 86-532-5027355 Fax: 86-532-5027205

India
Divyasree Chambers
1 Floor, Wing A (A3/A4)
No. 11, O'Shaugnessey Road
Bangalore, 560 025, India
Tel: 91-80-2290061 Fax: 91-80-2290062

Japan
Benex S-1 6F
3-18-20, Shinyokohama
Kohoku-Ku, Yokohama-shi
Kanagawa, 222-0033, Japan
Tel: 81-45-471- 6166 Fax: 81-45-471-6122

Korea
168-1, Youngbo Bldg. 3 Floor
Samsung-Dong, Kangnam-Ku
Seoul, Korea 135-882
Tel: 82-2-554-7200 Fax: 82-2-558-5932 or
82-2-558-5934

Singapore
200 Middle Road
#07-02 Prime Centre
Singapore, 188980
Tel: 65-6334-8870 Fax: 65-6334-8850

Taiwan
Kaohsiung Branch
30F - 1 No. 8
Min Chuan 2nd Road
Kaohsiung 806, Taiwan
Tel: 886-7-536-4818
Fax: 886-7-536-4803

Taiwan
Taiwan Branch
11F-3, No. 207
Tung Hua North Road
Taipei, 105, Taiwan
Tel: 886-2-2717-7175 Fax: 886-2-2545-0139

EUROPE

Austria
Durisolstrasse 2
A-4600 Wels
Austria
Tel: 43-7242-2244-399
Fax: 43-7242-2244-393

Denmark
Regus Business Centre
Lautrup hoj 1-3
Ballerup DK-2750 Denmark
Tel: 45-4420-9895 Fax: 45-4420-9910

France
Parc d'Activite du Moulin de Massy
43 Rue du Saule Trapu
Batiment A - ler Etage
91300 Massy, France
Tel: 33-1-69-53-63-20
Fax: 33-1-69-30-90-79

Germany
Steinheilstrasse 10
D-85737 Ismaning, Germany
Tel: 49-89-627-144-0
Fax: 49-89-627-144-44

Italy
Via Quasimodo, 12
20025 Legnano (MI)
Milan, Italy
Tel: 39-0331-742611
Fax: 39-0331-466781

Netherlands
P. A. De Biesbosch 14
NL-5152 SC Drunen, Netherlands
Tel: 31-416-690399
Fax: 31-416-690340

United Kingdom
505 Eskdale Road
Winnersh Triangle
Wokingham
Berkshire, England RG41 5TU
Tel: 44-118-921-5869
Fax: 44-118-921-5820

07/28/03

© 2003 Microchip Technology Inc.