TOSHIBA BIPOLAR LINEAR INTEGRATED CIRCUIT SILICON MONOLITHIC

TA78L005AP, TA78L006AP, TA78L007AP, TA78L075AP
TA78L008AP, TA78L009AP, TA78L010AP, TA78L012AP
TA78L132AP, TA78L015AP, TA78L018AP, TA78L020AP, TA78L024AP

THREE TERMINAL POSITIVE REGULATORS

5V, 6V, 7V, 7.5V, 8V, 9V, 10V, 12V, 13.2V, 15V, 18V, 20V, 24V

FEATURES

- Suitable for TTL, C^2MOS Power Supply
- Internal Short-Circuit Current Limiting
- Internal Thermal Overload Protection
- Maximum Output Current of 150mA ($T_j = 25°C$)
- Available in the Plastic TO-92MOD Package

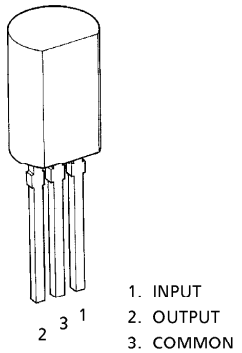

SSIP3-P-1.27

Weight : 0.36g (Typ.)

EQUIVALENT CIRCUIT

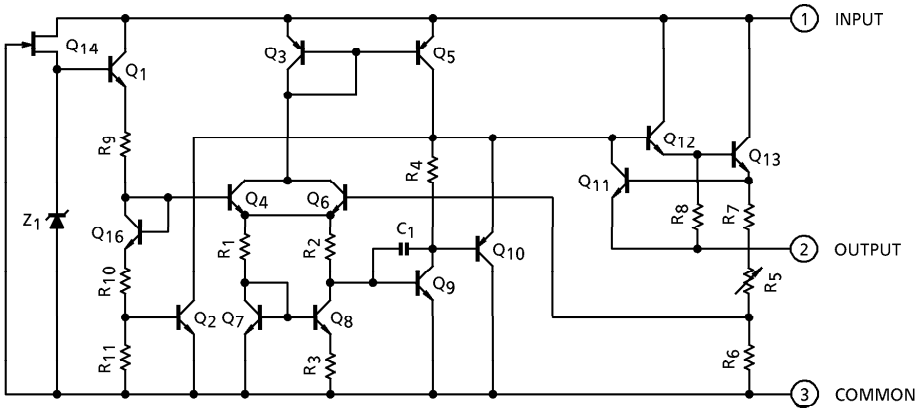

961001EBA2

- TOSHIBA is continually working to improve the quality and the reliability of its products. Nevertheless, semiconductor devices in general can malfunction or fail due to their inherent electrical sensitivity and vulnerability to physical stress. It is the responsibility of the buyer, when utilizing TOSHIBA products, to observe standards of safety, and to avoid situations in which a malfunction or failure of a TOSHIBA product could cause loss of human life, bodily injury or damage to property. In developing your designs, please ensure that TOSHIBA products are used within specified operating ranges as set forth in the most recent products specifications. Also, please keep in mind the precautions and conditions set forth in the TOSHIBA Semiconductor Reliability Handbook.
- The products described in this document are subject to foreign exchange and foreign trade control laws.
- The information contained herein is presented only as a guide for the applications of our products. No responsibility is assumed by TOSHIBA CORPORATION for any infringements of intellectual property or other rights of the third parties which may result from its use. No license is granted by implication or otherwise under any intellectual property or other rights of TOSHIBA CORPORATION or others.
- The information contained herein is subject to change without notice.

MAXIMUM RATINGS (Ta = 25°C)

CHARACTERISTIC		SYMBOL	RATING	UNIT
Input Voltage	TA78L005AP	V_{IN}	35	V
	TA78L006AP			
	TA78L007AP			
	TA78L075AP			
	TA78L008AP			
	TA78L009AP			
	TA78L010AP			
	TA78L012AP			
	TA78L132AP			
	TA78L015AP			
	TA78L018AP		40	
	TA78L020AP			
	TA78L024AP			
Power Dissipation	(Ta = 25°C)	P_D	800	mW
Operating Temperature		T_{opr}	− 30～75	°C
Storage Temperature		T_{stg}	− 55～150	°C
Operating Junction Temperature		T_j	− 30～150	°C
Thermal Resistance		$R_{th\ (j\text{-}a)}$	156	°C / W

TA78L005AP

ELECTRICAL CHARACTERISTICS

(Unless otherwise specified, V_{IN} = 10V, I_{OUT} = 40mA, C_{IN} = 0.33μF, C_{OUT} = 0.1μF, 0°C ≦ T_j ≦ 125°C)

CHARACTERISTIC	SYMBOL	TEST CIR-CUIT	TEST CONDITION		MIN.	TYP.	MAX.	UNIT
Output Voltage	V_{OUT}	1	T_j = 25°C		4.8	5.0	5.2	V
Line Regulation	Reg.line	1	T_j = 25°C	7.0V ≦ V_{IN} ≦ 20V	—	55	150	mV
				8.0V ≦ V_{IN} ≦ 20V	—	45	100	
Load Regulation	Reg.load	1	T_j = 25°C	1.0mA ≦ I_{OUT} ≦ 100mA	—	11	60	mV
				1.0mA ≦ I_{OUT} ≦ 40mA	—	5.0	30	
Output Voltage	V_{OUT}	1	T_j = 25°C	7.0V ≦ V_{IN} ≦ 20V, 1.0mA ≦ I_{OUT} ≦ 40mA	4.75	—	5.25	V
				1.0mA ≦ I_{OUT} ≦ 70mA	4.75	—	5.25	
Quiescent Current	I_B	1	T_j = 25°C		—	3.1	6.0	mA
			T_j = 125°C		—	—	5.5	
Quiescent Current Change	ΔI_B	1	8.0V ≦ V_{IN} ≦ 20V		—	—	1.5	mA
			1.0mA ≦ I_{OUT} ≦ 40mA		—	—	0.1	
Output Noise Voltage	V_{NO}	2	Ta = 25°C, 10Hz ≦ f ≦ 100kHz		—	40	—	μV_{rms}
Long Term Stability	$\Delta V_{OUT} / \Delta t$	1	—		—	12	—	mV / 1.0kh
Ripple Rejection	R.R.	3	f = 120Hz, 8.0V ≦ V_{IN} ≦ 18V, T_j = 25°C		41	49	—	dB
Dropout Voltage	$\lvert V_{IN}-V_{OUT} \rvert$	1	T_j = 25°C, I_{OUT} = 150mA		—	1.7	—	V
Average Temperature Coefficient of Output Voltage	T_{CVO}	1	I_{OUT} = 5mA		—	−0.6	—	mV / °C

TA78L006AP

ELECTRICAL CHARACTERISTICS

(Unless otherwise specified, V_{IN} = 11V, I_{OUT} = 40mA, C_{IN} = 0.33μF, C_{OUT} = 0.1μF, 0°C ≦ T_j ≦ 125°C)

CHARACTERISTIC	SYMBOL	TEST CIR-CUIT	TEST CONDITION		MIN.	TYP.	MAX.	UNIT
Output Voltage	V_{OUT}	1	T_j = 25°C		5.76	6.0	6.24	V
Line Regulation	Reg.line	1	T_j = 25°C	8.1V ≦ V_{IN} ≦ 21V	—	50	150	mV
				9.0V ≦ V_{IN} ≦ 21V	—	45	110	
Load Regulation	Reg.load	1	T_j = 25°C	1.0mA ≦ I_{OUT} ≦ 100mA	—	12	70	mV
				1.0mA ≦ I_{OUT} ≦ 40mA	—	5.5	35	
Output Voltage	V_{OUT}	1	T_j = 25°C	8.1V ≦ V_{IN} ≦ 21V 1.0mA ≦ I_{OUT} ≦ 40mA	5.7	—	6.3	V
				1.0mA ≦ I_{OUT} ≦ 70mA	5.7	—	6.3	
Quiescent Current	I_B	1	T_j = 25°C		—	3.1	6.0	mA
			T_j = 125°C		—	—	5.5	
Quiescent Current Change	ΔI_B	1	9.0V ≦ V_{IN} ≦ 20V		—	—	1.5	mA
			1.0mA ≦ I_{OUT} ≦ 40mA		—	—	0.1	
Output Noise Voltage	V_{NO}	2	Ta = 25°C, 10Hz ≦ f ≦ 100kHz		—	40	—	μV_{rms}
Long Term Stability	$\Delta V_{OUT} / \Delta t$	1	—		—	14	—	mV / 1.0kh
Ripple Rejection	R.R.	3	f = 120Hz, 9.0V ≦ V_{IN} ≦ 19V, T_j = 25°C		39	47	—	dB
Dropout Voltage	$\lvert V_{IN}-V_{OUT} \rvert$	1	T_j = 25°C, I_{OUT} = 150mA		—	1.7	—	V
Average Temperature Coefficient of Output Voltage	T_{CVO}	1	I_{OUT} = 5mA		—	−0.7	—	mV / °C

TA78L007AP

ELECTRICAL CHARACTERISTICS

(Unless otherwise specified, V_{IN} = 12V, I_{OUT} = 40mA, C_{IN} = 0.33μF, C_{OUT} = 0.1μF, 0°C ≦ T_j ≦ 125°C)

CHARACTERISTIC	SYMBOL	TEST CIR-CUIT	TEST CONDITION		MIN.	TYP.	MAX.	UNIT
Output Voltage	V_{OUT}	1	T_j = 25°C		6.72	7.0	7.28	V
Line Regulation	Reg.line	1	T_j = 25°C	9.2V ≦ V_{IN} ≦ 22V	—	50	160	mV
				10V ≦ V_{IN} ≦ 22V	—	45	115	
Load Regulation	Reg.load	1	T_j = 25°C	1.0mA ≦ I_{OUT} ≦ 100mA	—	13	75	mV
				1.0mA ≦ I_{OUT} ≦ 40mA	—	6.0	40	
Output Voltage	V_{OUT}	1	T_j = 25°C	9.2V ≦ V_{IN} ≦ 22V 1.0mA ≦ I_{OUT} ≦ 40mA	6.65	—	7.35	V
				1.0mA ≦ I_{OUT} ≦ 70mA	6.65	—	7.35	
Quiescent Current	I_B	1	T_j = 25°C		—	3.1	6.5	mA
			T_j = 125°C		—	—	6.0	
Quiescent Current Change	ΔI_B	1	10V ≦ V_{IN} ≦ 22V		—	—	1.5	mA
			1.0mA ≦ I_{OUT} ≦ 40mA		—	—	0.1	
Output Noise Voltage	V_{NO}	2	Ta = 25°C, 10Hz ≦ f ≦ 100kHz		—	50	—	μV_{rms}
Long Term Stability	$\Delta V_{OUT} / \Delta t$	1	—		—	17	—	mV / 1.0kh
Ripple Rejection	R.R.	3	f = 120Hz, 10V ≦ V_{IN} ≦ 20V, T_j = 25°C		37	46	—	dB
Dropout Voltage	$\lvert V_{IN}-V_{OUT} \rvert$	1	T_j = 25°C, I_{OUT} = 150mA		—	1.7	—	V
Average Temperature Coefficient of Output Voltage	T_{CVO}	1	I_{OUT} = 5mA		—	−0.75	—	mV / °C

TA78L075AP

ELECTRICAL CHARACTERISTICS

(Unless otherwise specified, V_{IN} = 13V, I_{OUT} = 40mA, C_{IN} = 0.33μF, C_{OUT} = 0.1μF, 0°C ≦ T_j ≦ 125°C)

CHARACTERISTIC	SYMBOL	TEST CIR-CUIT	TEST CONDITION		MIN.	TYP.	MAX.	UNIT
Output Voltage	V_{OUT}	1	T_j = 25°C		7.21	7.5	7.79	V
Line Regulation	Reg.line	1	T_j = 25°C	9.8V ≦ V_{IN} ≦ 23V	—	40	170	mV
				10.5V ≦ V_{IN} ≦ 23V	—	40	120	
Load Regulation	Reg.load	1	T_j = 25°C	1.0mA ≦ I_{OUT} ≦ 100mA	—	14	80	mV
				1.0mA ≦ I_{OUT} ≦ 40mA	—	6.5	40	
Output Voltage	V_{OUT}	1	T_j = 25°C	9.8V ≦ V_{IN} ≦ 23V, 1.0mA ≦ I_{OUT} ≦ 40mA	7.125	—	7.875	V
				1.0mA ≦ I_{OUT} ≦ 70mA	7.125	—	7.875	
Quiescent Current	I_B	1	T_j = 25°C		—	3.1	6.5	mA
			T_j = 125°C		—	—	6.0	
Quiescent Current Change	ΔI_B	1	10.5V ≦ V_{IN} ≦ 23V		—	—	1.5	mA
			1.0mA ≦ I_{OUT} ≦ 40mA		—	—	0.1	
Output Noise Voltage	V_{NO}	2	Ta = 25°C, 10Hz ≦ f ≦ 100kHz		—	60	—	μV_{rms}
Long Term Stability	$\Delta V_{OUT} / \Delta t$	1	—		—	19	—	mV / 1.0kh
Ripple Rejection	R.R.	3	f = 120Hz, 11V ≦ V_{IN} ≦ 21V, T_j = 25°C		37	45	—	dB
Dropout Voltage	$\lvert V_{IN}-V_{OUT} \rvert$	1	T_j = 25°C, I_{OUT} = 150mA		—	1.7	—	V
Average Temperature Coefficient of Output Voltage	T_{CVO}	1	I_{OUT} = 5mA		—	− 0.75	—	mV / °C

TA78L008AP

ELECTRICAL CHARACTERISTICS

(Unless otherwise specified, V_{IN} = 14V, I_{OUT} = 40mA, C_{IN} = 0.33μF, C_{OUT} = 0.1μF, 0°C ≦ T_j ≦ 125°C)

CHARACTERISTIC	SYMBOL	TEST CIR-CUIT	TEST CONDITION		MIN.	TYP.	MAX.	UNIT
Output Voltage	V_{OUT}	1	T_j = 25°C		7.7	8.0	8.3	V
Line Regulation	Reg.line	1	T_j = 25°C	10.5V ≦ V_{IN} ≦ 23V	—	20	175	mV
				11V ≦ V_{IN} ≦ 23V	—	12	125	
Load Regulation	Reg.load	1	T_j = 25°C	1.0mA ≦ I_{OUT} ≦ 100mA	—	15	80	mV
				1.0mA ≦ I_{OUT} ≦ 40mA	—	7.0	40	
Output Voltage	V_{OUT}	1	T_j = 25°C	10.5V ≦ V_{IN} ≦ 23V, 1.0mA ≦ I_{OUT} ≦ 40mA	7.6	—	8.4	V
				1.0mA ≦ I_{OUT} ≦ 70mA	7.6	—	8.4	
Quiescent Current	I_B	1	T_j = 25°C		—	3.1	6.5	mA
			T_j = 125°C		—	—	6.0	
Quiescent Current Change	ΔI_B	1	11V ≦ V_{IN} ≦ 23V		—	—	1.5	mA
			1.0mA ≦ I_{OUT} ≦ 40mA		—	—	0.1	
Output Noise Voltage	V_{NO}	2	Ta = 25°C, 10Hz ≦ f ≦ 100kHz		—	60	—	μV_{rms}
Long Term Stability	$\Delta V_{OUT} / \Delta t$	1	—		—	20	—	mV / 1.0kh
Ripple Rejection	R.R.	3	f = 120Hz, 12V ≦ V_{IN} ≦ 23V, T_j = 25°C		37	45	—	dB
Dropout Voltage	$\lvert V_{IN}-V_{OUT} \rvert$	1	T_j = 25°C, I_{OUT} = 150mA		—	1.7	—	V
Average Temperature Coefficient of Output Voltage	T_{CVO}	1	I_{OUT} = 5mA		—	−0.8	—	mV / °C

TA78L009AP

ELECTRICAL CHARACTERISTICS

(Unless otherwise specified, V_{IN} = 15V, I_{OUT} = 40mA, C_{IN} = 0.33μF, C_{OUT} = 0.1μF, 0°C ≦ T_j ≦ 125°C)

CHARACTERISTIC	SYMBOL	TEST CIR-CUIT	TEST CONDITION		MIN.	TYP.	MAX.	UNIT
Output Voltage	V_{OUT}	1	T_j = 25°C		8.64	9.0	9.36	V
Line Regulation	Reg.line	1	T_j = 25°C	11.4V ≦ V_{IN} ≦ 24V	—	80	200	mV
				12V ≦ V_{IN} ≦ 24V	—	20	160	
Load Regulation	Reg.load	1	T_j = 25°C	1.0mA ≦ I_{OUT} ≦ 100mA	—	17	90	mV
				1.0mA ≦ I_{OUT} ≦ 40mA	—	8.0	45	
Output Voltage	V_{OUT}	1	T_j = 25°C	11.4V ≦ V_{IN} ≦ 24V 1.0mA ≦ I_{OUT} ≦ 40mA	8.55	—	9.45	V
				1.0mA ≦ I_{OUT} ≦ 70mA	8.55	—	9.45	
Quiescent Current	I_B	1	T_j = 25°C		—	3.2	6.5	mA
			T_j = 125°C		—	—	6.0	
Quiescent Current Change	ΔI_B	1	12V ≦ V_{IN} ≦ 24V		—	—	1.5	mA
			1.0mA ≦ I_{OUT} ≦ 40mA		—	—	0.1	
Output Noise Voltage	V_{NO}	2	Ta = 25°C, 10Hz ≦ f ≦ 100kHz		—	65	—	μV_{rms}
Long Term Stability	$\Delta V_{OUT} / \Delta t$	1	—		—	21	—	mV / 1.0kh
Ripple Rejection	R.R.	3	f = 120Hz, 12V ≦ V_{IN} ≦ 24V, T_j = 25°C		36	44	—	dB
Dropout Voltage	$\lvert V_{IN}-V_{OUT} \rvert$	1	T_j = 25°C, I_{OUT} = 150mA		—	1.7	—	V
Average Temperature Coefficient of Output Voltage	T_{CVO}	1	I_{OUT} = 5mA		—	−0.85	—	mV / °C

TA78L010AP

ELECTRICAL CHARACTERISTICS

(Unless otherwise specified, V_{IN} = 16V, I_{OUT} = 40mA, C_{IN} = 0.33μF, C_{OUT} = 0.1μF, 0°C ≦ T_j ≦ 125°C)

CHARACTERISTIC	SYMBOL	TEST CIR-CUIT	TEST CONDITION		MIN.	TYP.	MAX.	UNIT
Output Voltage	V_{OUT}	1	T_j = 25°C		9.6	10	10.4	V
Line Regulation	Reg.line	1	T_j = 25°C	12.5V ≦ V_{IN} ≦ 25V	—	80	230	mV
				13V ≦ V_{IN} ≦ 25V	—	30	170	
Load Regulation	Reg.load	1	T_j = 25°C	1.0mA ≦ I_{OUT} ≦ 100mA	—	18	90	mV
				1.0mA ≦ I_{OUT} ≦ 40mA	—	8.5	45	
Output Voltage	V_{OUT}	1	T_j = 25°C	12.5V ≦ V_{IN} ≦ 25V, 1.0mA ≦ I_{OUT} ≦ 40mA	9.5	—	10.5	V
				1.0mA ≦ I_{OUT} ≦ 70mA	9.5	—	10.5	
Quiescent Current	I_B	1	T_j = 25°C		—	3.2	6.5	mA
			T_j = 125°C		—	—	6.0	
Quiescent Current Change	ΔI_B	1	13V ≦ V_{IN} ≦ 25V		—	—	1.5	mA
			1.0mA ≦ I_{OUT} ≦ 40mA		—	—	0.1	
Output Noise Voltage	V_{NO}	2	Ta = 25°C, 10Hz ≦ f ≦ 100kHz		—	70	—	μV_{rms}
Long Term Stability	$\Delta V_{OUT} / \Delta t$	1	—		—	22	—	mV / 1.0kh
Ripple Rejection	R.R.	3	f = 120Hz, 13V ≦ V_{IN} ≦ 24V, T_j = 25°C		36	43	—	dB
Dropout Voltage	$\lvert V_{IN}-V_{OUT} \rvert$	1	T_j = 25°C, I_{OUT} = 150mA		—	1.7	—	V
Average Temperature Coefficient of Output Voltage	T_{CVO}	1	I_{OUT} = 5mA		—	−0.9	—	mV / °C

TA78L012AP

ELECTRICAL CHARACTERISTICS

(Unless otherwise specified, V_{IN} = 19V, I_{OUT} = 40mA, C_{IN} = 0.33μF, C_{OUT} = 0.1μF, 0°C ≦ T_j ≦ 125°C)

CHARACTERISTIC	SYMBOL	TEST CIR-CUIT	TEST CONDITION		MIN.	TYP.	MAX.	UNIT
Output Voltage	V_{OUT}	1	T_j = 25°C		11.5	12	12.5	V
Line Regulation	Reg.line	1	T_j = 25°C	14.5V ≦ V_{IN} ≦ 27V	—	120	250	mV
				16V ≦ V_{IN} ≦ 27V	—	100	200	
Load Regulation	Reg.load	1	T_j = 25°C	1.0mA ≦ I_{OUT} ≦ 100mA	—	20	100	mV
				1.0mA ≦ I_{OUT} ≦ 40mA	—	10	50	
Output Voltage	V_{OUT}	1	T_j = 25°C	14.5V ≦ V_{IN} ≦ 27V, 1.0mA ≦ I_{OUT} ≦ 40mA	11.4	—	12.6	V
				1.0mA ≦ I_{OUT} ≦ 70mA	11.4	—	12.6	
Quiescent Current	I_B	1	T_j = 25°C		—	3.2	6.5	mA
			T_j = 125°C		—	—	6.0	
Quiescent Current Change	ΔI_B	1	16V ≦ V_{IN} ≦ 27V		—	—	1.5	mA
			1.0mA ≦ I_{OUT} ≦ 40mA		—	—	0.1	
Output Noise Voltage	V_{NO}	2	Ta = 25°C, 10Hz ≦ f ≦ 100kHz		—	80	—	μV_{rms}
Long Term Stability	$\Delta V_{OUT} / \Delta t$	1	—		—	24	—	mV / 1.0kh
Ripple Rejection	R.R.	3	f = 120Hz, 15V ≦ V_{IN} ≦ 25V, T_j = 25°C		36	41	—	dB
Dropout Voltage	$\lvert V_{IN}-V_{OUT} \rvert$	1	T_j = 25°C, I_{OUT} = 150mA		—	1.7	—	V
Average Temperature Coefficient of Output Voltage	T_{CVO}	1	I_{OUT} = 5mA		—	− 1.0	—	mV / °C

TA78L132AP

ELECTRICAL CHARACTERISTICS

(Unless otherwise specified, V_{IN} = 21V, I_{OUT} = 40mA, C_{IN} = 0.33μF, C_{OUT} = 0.1μF, 0°C ≦ T_j ≦ 125°C)

CHARACTERISTIC	SYMBOL	TEST CIR-CUIT	TEST CONDITION		MIN.	TYP.	MAX.	UNIT
Output Voltage	V_{OUT}	1	T_j = 25°C		12.67	13.2	13.73	V
Line Regulation	Reg.line	1	T_j = 25°C	16V ≦ V_{IN} ≦ 28V	—	125	270	mV
				17V ≦ V_{IN} ≦ 28V	—	105	225	
Load Regulation	Reg.load	1	T_j = 25°C	1.0mA ≦ I_{OUT} ≦ 100mA	—	22	120	mV
				1.0mA ≦ I_{OUT} ≦ 40mA	—	11	60	
Output Voltage	V_{OUT}	1	T_j = 25°C	16V ≦ V_{IN} ≦ 28V, 1.0mA ≦ I_{OUT} ≦ 40mA	12.54	—	13.86	V
				1.0mA ≦ I_{OUT} ≦ 70mA	12.54	—	13.86	
Quiescent Current	I_B	1	T_j = 25°C		—	3.2	6.5	mA
			T_j = 125°C		—	—	6.0	
Quiescent Current Change	ΔI_B	1	17V ≦ V_{IN} ≦ 28V		—	—	1.5	mA
			1.0mA ≦ I_{OUT} ≦ 40mA		—	—	0.1	
Output Noise Voltage	V_{NO}	2	Ta = 25°C, 10Hz ≦ f ≦ 100kHz		—	90	—	μV_{rms}
Long Term Stability	$\Delta V_{OUT} / \Delta t$	1	—		—	28	—	mV / 1.0kh
Ripple Rejection	R.R.	3	f = 120Hz, 17V ≦ V_{IN} ≦ 27V, T_j = 25°C		34	41	—	dB
Dropout Voltage	$\lvert V_{IN}-V_{OUT} \rvert$	1	T_j = 25°C, I_{OUT} = 150mA		—	1.7	—	V
Average Temperature Coefficient of Output Voltage	T_{CVO}	1	I_{OUT} = 5mA		—	− 1.2	—	mV / °C

TA78L015AP

ELECTRICAL CHARACTERISTICS

(Unless otherwise specified, V_{IN} = 23V, I_{OUT} = 40mA, C_{IN} = 0.33μF, C_{OUT} = 0.1μF, 0°C ≦ T_j ≦ 125°C)

CHARACTERISTIC	SYMBOL	TEST CIR-CUIT	TEST CONDITION		MIN.	TYP.	MAX.	UNIT
Output Voltage	V_{OUT}	1	T_j = 25°C		14.4	15	15.6	V
Line Regulation	Reg.line	1	T_j = 25°C	17.5V ≦ V_{IN} ≦ 30V	—	130	300	mV
				20V ≦ V_{IN} ≦ 30V	—	110	250	
Load Regulation	Reg.load	1	T_j = 25°C	1.0mA ≦ I_{OUT} ≦ 100mA	—	25	150	mV
				1.0mA ≦ I_{OUT} ≦ 40mA	—	12	75	
Output Voltage	V_{OUT}	1	T_j = 25°C	17.5V ≦ V_{IN} ≦ 30V, 1.0mA ≦ I_{OUT} ≦ 40mA	14.25	—	15.75	V
				1.0mA ≦ I_{OUT} ≦ 70mA	14.25	—	15.75	
Quiescent Current	I_B	1	T_j = 25°C		—	3.3	6.5	mA
			T_j = 125°C		—	—	6.0	
Quiescent Current Change	ΔI_B	1	20V ≦ V_{IN} ≦ 30V		—	—	1.5	mA
			1.0mA ≦ I_{OUT} ≦ 40mA		—	—	0.1	
Output Noise Voltage	V_{NO}	2	Ta = 25°C, 10Hz ≦ f ≦ 100kHz		—	90	—	μV_{rms}
Long Term Stability	$\Delta V_{OUT} / \Delta t$	1	—		—	30	—	mV / 1.0kh
Ripple Rejection	R.R.	3	f = 120Hz, 18.5V ≦ V_{IN} ≦ 28.5V, T_j = 25°C		34	40	—	dB
Dropout Voltage	$\lvert V_{IN}-V_{OUT} \rvert$	1	T_j = 25°C, I_{OUT} = 150mA		—	1.7	—	V
Average Temperature Coefficient of Output Voltage	T_{CVO}	1	I_{OUT} = 5mA		—	− 1.3	—	mV / °C

TA78L018AP

ELECTRICAL CHARACTERISTICS

(Unless otherwise specified, V_{IN} = 27V, I_{OUT} = 40mA, C_{IN} = 0.33μF, C_{OUT} = 0.1μF, 0°C ≦ T_j ≦ 125°C)

CHARACTERISTIC	SYMBOL	TEST CIR-CUIT	TEST CONDITION		MIN.	TYP.	MAX.	UNIT
Output Voltage	V_{OUT}	1	T_j = 25°C		17.3	18	18.7	V
Line Regulation	Reg.line	1	T_j = 25°C	21.4V ≦ V_{IN} ≦ 33V	—	32	325	mV
				22V ≦ V_{IN} ≦ 33V	—	27	275	
Load Regulation	Reg.load	1	T_j = 25°C	1.0mA ≦ I_{OUT} ≦ 100mA	—	30	170	mV
				1.0mA ≦ I_{OUT} ≦ 40mA	—	15	75	
Output Voltage	V_{OUT}	1	T_j = 25°C	21.4V ≦ V_{IN} ≦ 33V, 1.0mA ≦ I_{OUT} ≦ 40mA	17.1	—	18.9	V
				1.0mA ≦ I_{OUT} ≦ 70mA	17.1	—	18.9	
Quiescent Current	I_B	1	T_j = 25°C		—	3.3	6.5	mA
			T_j = 125°C		—	—	6.0	
Quiescent Current Change	ΔI_B	1	22V ≦ V_{IN} ≦ 33V		—	—	1.5	mA
			1.0mA ≦ I_{OUT} ≦ 40mA		—	—	0.1	
Output Noise Voltage	V_{NO}	2	Ta = 25°C, 10Hz ≦ f ≦ 100kHz		—	150	—	μV_{rms}
Long Term Stability	$\Delta V_{OUT} / \Delta t$	1	—		—	45	—	mV / 1.0kh
Ripple Rejection	R.R.	3	f = 120Hz, 23V ≦ V_{IN} ≦ 33V, T_j = 25°C		32	38	—	dB
Dropout Voltage	$\lvert V_{IN}-V_{OUT} \rvert$	1	T_j = 25°C, I_{OUT} = 150mA		—	1.7	—	V
Average Temperature Coefficient of Output Voltage	T_{CVO}	1	I_{OUT} = 5mA		—	− 1.5	—	mV / °C

TA78L020AP

ELECTRICAL CHARACTERISTICS

(Unless otherwise specified, V_{IN} = 29V, I_{OUT} = 40mA, C_{IN} = 0.33μF, C_{OUT} = 0.1μF, 0°C ≦ T_j ≦ 125°C)

CHARACTERISTIC	SYMBOL	TEST CIR-CUIT	TEST CONDITION		MIN.	TYP.	MAX.	UNIT
Output Voltage	V_{OUT}	1	T_j = 25°C		19.2	20	20.8	V
Line Regulation	Reg.line	1	T_j = 25°C	23.5V ≦ V_{IN} ≦ 35V	—	33	330	mV
				24V ≦ V_{IN} ≦ 35V	—	28	285	
Load Regulation	Reg.load	1	T_j = 25°C	1.0mA ≦ I_{OUT} ≦ 100mA	—	33	180	mV
				1.0mA ≦ I_{OUT} ≦ 40mA	—	17	90	
Output Voltage	V_{OUT}	1	T_j = 25°C	23.5V ≦ V_{IN} ≦ 35V, 1.0mA ≦ I_{OUT} ≦ 40mA	19.0	—	21.0	V
				1.0mA ≦ I_{OUT} ≦ 70mA	19.0	—	21.0	
Quiescent Current	I_B	1	T_j = 25°C		—	3.3	6.5	mA
			T_j = 125°C		—	—	6.0	
Quiescent Current Change	ΔI_B	1	24V ≦ V_{IN} ≦ 35V		—	—	1.5	mA
			1.0mA ≦ I_{OUT} ≦ 40mA		—	—	0.1	
Output Noise Voltage	V_{NO}	2	Ta = 25°C, 10Hz ≦ f ≦ 100kHz		—	170	—	μV_{rms}
Long Term Stability	$\Delta V_{OUT} / \Delta t$	1	—		—	49	—	mV / 1.0kh
Ripple Rejection	R.R.	3	f = 120Hz, 25V ≦ V_{IN} ≦ 35V, T_j = 25°C		31	37	—	dB
Dropout Voltage	$\lvert V_{IN}-V_{OUT} \rvert$	1	T_j = 25°C, I_{OUT} = 150mA		—	1.7	—	V
Average Temperature Coefficient of Output Voltage	T_{CVO}	1	I_{OUT} = 5mA		—	− 1.7	—	mV / °C

TA78L024AP

ELECTRICAL CHARACTERISTICS

(Unless otherwise specified, V_{IN} = 33V, I_{OUT} = 40mA, C_{IN} = 0.33μF, C_{OUT} = 0.1μF, 0°C ≦ T_j ≦ 125°C)

CHARACTERISTIC	SYMBOL	TEST CIR-CUIT	TEST CONDITION		MIN.	TYP.	MAX.	UNIT
Output Voltage	V_{OUT}	1	T_j = 25°C		23	24	25	V
Line Regulation	Reg.line	1	T_j = 25°C	27.5V ≦ V_{IN} ≦ 38V	—	35	350	mV
				28V ≦ V_{IN} ≦ 38V	—	30	300	
Load Regulation	Reg.load	1	T_j = 25°C	1.0mA ≦ I_{OUT} ≦ 100mA	—	40	200	mV
				1.0mA ≦ I_{OUT} ≦ 40mA	—	20	100	
Output Voltage	V_{OUT}	1	T_j = 25°C	27.5V ≦ V_{IN} ≦ 38V, 1.0mA ≦ I_{OUT} ≦ 40mA	22.8	—	25.2	V
				1.0mA ≦ I_{OUT} ≦ 70mA	22.8	—	25.2	
Quiescent Current	I_B	1	T_j = 25°C		—	3.5	6.5	mA
			T_j = 125°C		—	—	6.0	
Quiescent Current Change	ΔI_B	1	28V ≦ V_{IN} ≦ 38V		—	—	1.5	mA
			1.0mA ≦ I_{OUT} ≦ 40mA		—	—	0.1	
Output Noise Voltage	V_{NO}	2	Ta = 25°C, 10Hz ≦ f ≦ 100kHz		—	200	—	μV_{rms}
Long Term Stability	$\Delta V_{OUT} / \Delta t$	1	—		—	56	—	mV / 1.0kh
Ripple Rejection	R.R.	3	f = 120Hz, 29V ≦ V_{IN} ≦ 39V, T_j = 25°C		31	35	—	dB
Dropout Voltage	$\lvert V_{IN}-V_{OUT} \rvert$	1	T_j = 25°C, I_{OUT} = 150mA		—	1.7	—	V
Average Temperature Coefficient of Output Voltage	T_{CVO}	1	I_{OUT} = 5mA		—	−2.0	—	mV / °C

TEST CIRCUIT 1 / STANDARD APPLICATION

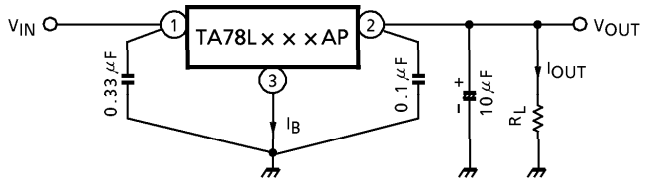

TEST CIRCUIT 2 V_{NO}

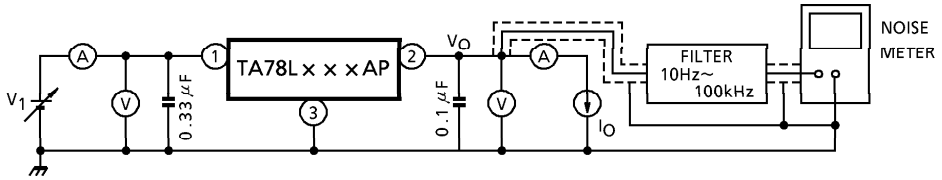

TEST CIRCUIT 3 R.R.

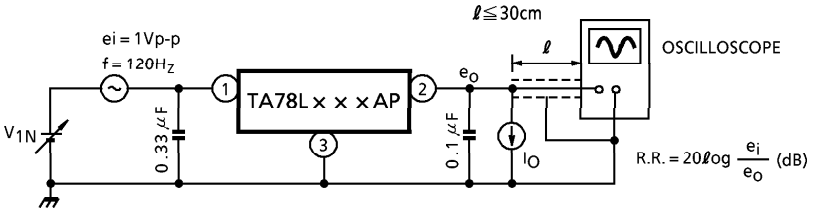

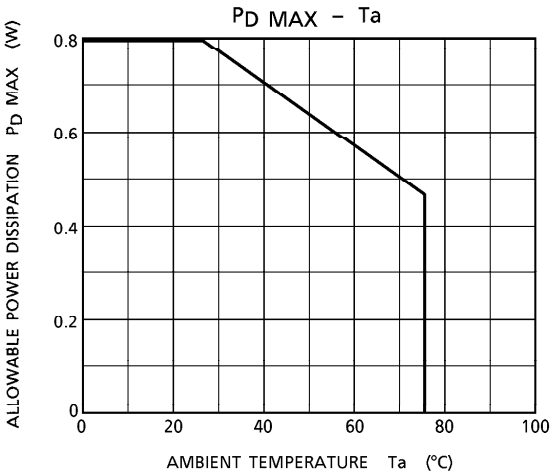
PD MAX – Ta
ALLOWABLE POWER DISSIPATION PD MAX (W)
0.8
0.6
0.4
0.2
0
0
20
40
60
80
100
AMBIENT TEMPERATURE Ta (°C)

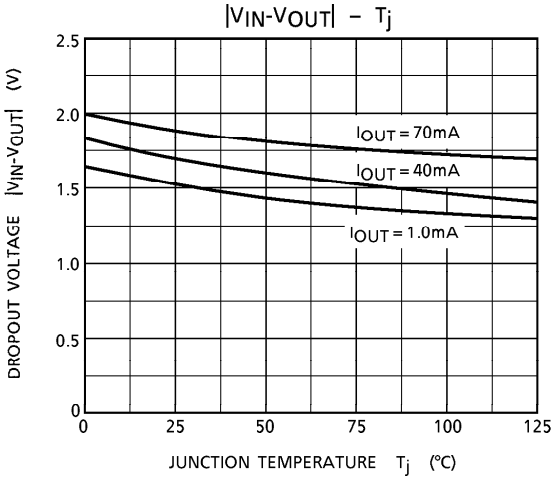
|VIN-VOUT| – Tj
DROPOUT VOLTAGE |VIN-VOUT| (V)
2.5
2.0
1.5
1.0
0.5
0
IOUT = 70mA
IOUT = 40mA
IOUT = 1.0mA
0
25
50
75
100
125
JUNCTION TEMPERATURE Tj (°C)

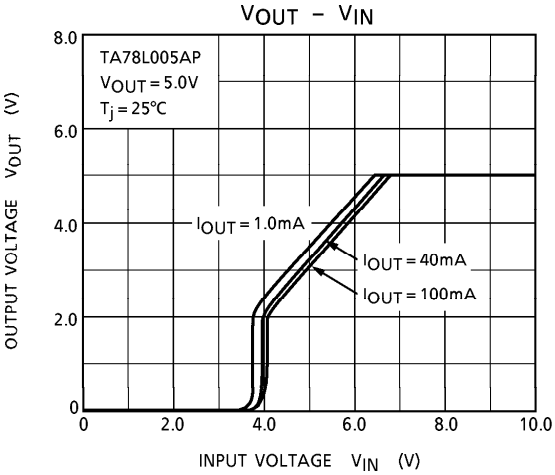
VOUT – VIN
TA78L005AP
VOUT = 5.0V
Tj = 25°C
OUTPUT VOLTAGE VOUT (V)
8.0
6.0
4.0
2.0
0
IOUT = 1.0mA
IOUT = 40mA
IOUT = 100mA
0
2.0
4.0
6.0
8.0
10.0
INPUT VOLTAGE VIN (V)

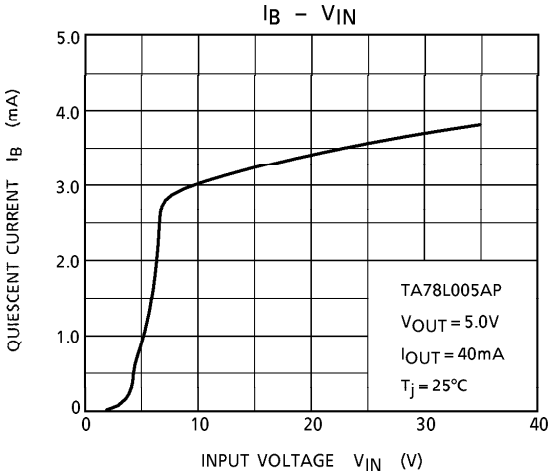
IB – VIN
QUIESCENT CURRENT IB (mA)
5.0
4.0
3.0
2.0
1.0
0
TA78L005AP
VOUT = 5.0V
IOUT = 40mA
Tj = 25°C
0
10
20
30
40
INPUT VOLTAGE VIN (V)

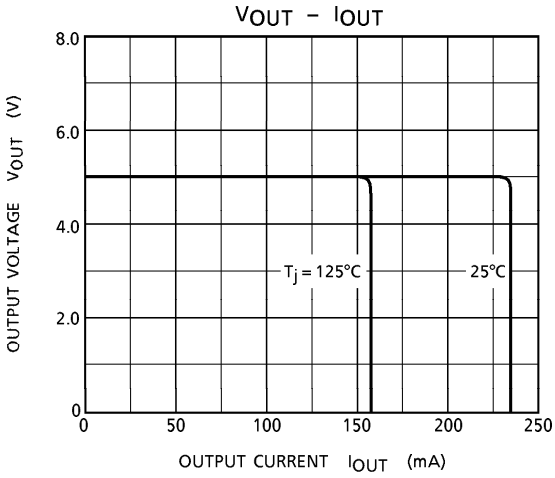
VOUT – IOUT
OUTPUT VOLTAGE VOUT (V)
8.0
6.0
4.0
2.0
0
Tj = 125°C
25°C
0
50
100
150
200
250
OUTPUT CURRENT IOUT (mA)

Precautions for Use

If high voltage in excess of output voltage (TYP. value) of IC is applied to its output terminal, IC may be destroyed. In this case, connect a Zener diode between the output terminal and GND to prevent application of excessive voltage. In particular, in such a current boosting circuit as shown in Application Circuit Example (2), if input voltage is suddenly applied by stages and furthermore, load is light, excessive voltage may be applied transiently to the output terminal of IC. In such a case as this, it may become necessary to increase capacity of output capacitor as appropriate, use a smaller R_1 (a resistor for bypassing IC bias current) or gradually rise input voltage in addition to use of a Zener diode as mentioned above.

APPLICATION CIRCUIT

(1) STANDARD APPLICATION

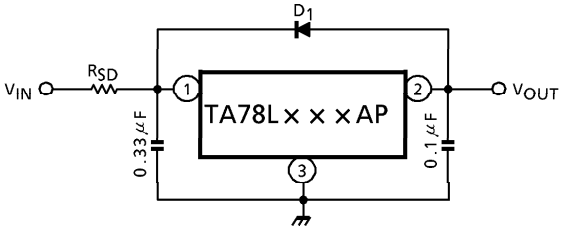

D_1 : IC protective diode
When surge voltage is applied to IC output terminal or $V_{IN} < V_{OUT}$ at the time of power ON / OFF, always connect the high speed swithing diode D_1.

R_{SD} : Power limiting resistor
If V_{IN} is too high, always connect R_{SD} in order to reduce power consumption of IC.

(2) A. CURRENT BOOST VOLTAGE REGULATOR

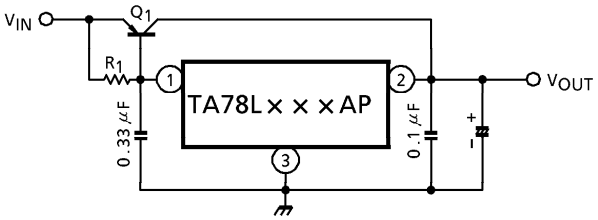

Use a required rediation plate for Q_1.

$$R_1 \leq \frac{V_{BE1}}{I_B\ MAX}$$

where, V_{BE1} : V_{BE} of external transistor Q_1.
I_B MAX : Max. bias current of IC.

B. SHORT-CIRCUIT PROTECTION

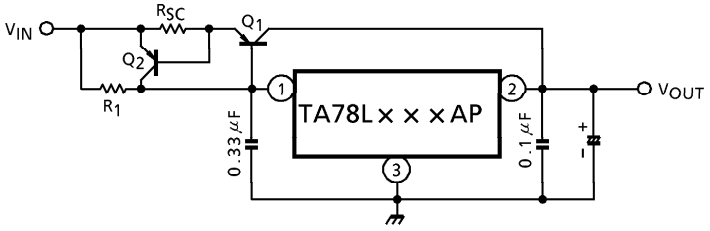

$$R_{SC} = \frac{V_{BE2}}{I_{SC}}$$

where, I_{SC} : Short-Circuit current

(3) CURRENT REGULATOR

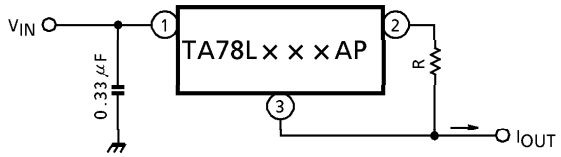

$$I_{OUT} = \frac{V_{OUT}}{R} + I_B$$

(4) VOLTAGE BOOST REGULATOR

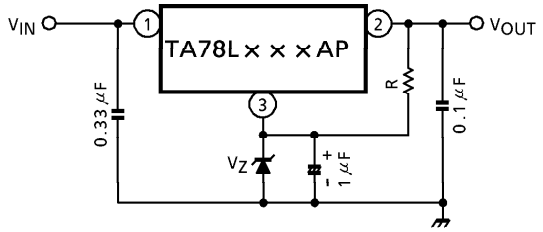

$V_{OUT} = V_Z + V_{OUT}$ (of IC)
A little of current in resistor R is needed.

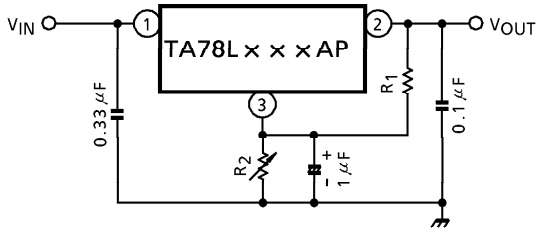

$$V_{OUT} = R_2 \left(I_B \cdot \frac{V_{OUT}\text{ (of IC)}}{R_1}\right) + V_{OUT}\text{ (of IC)}$$

(5) NEGATIVE REGULATOR

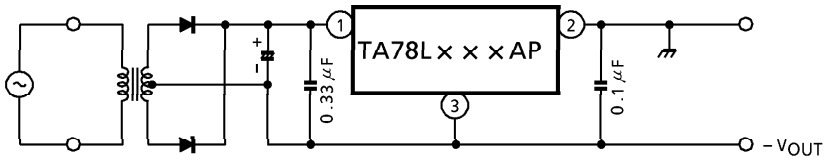

(6) POSITIVE AND NEGATIVE REGULATOR

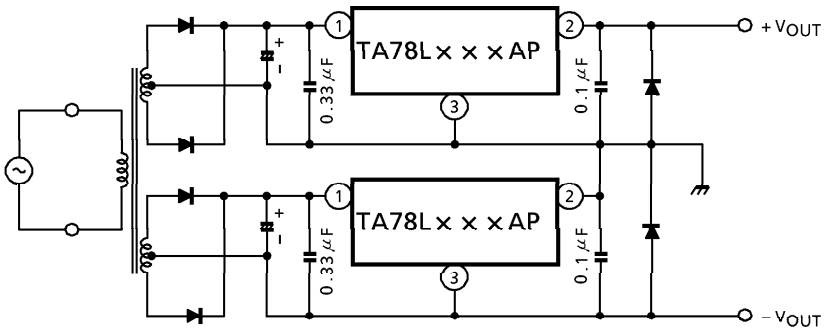

OUTLINE DRAWING

SSIP3-P-1.27

Unit : mm

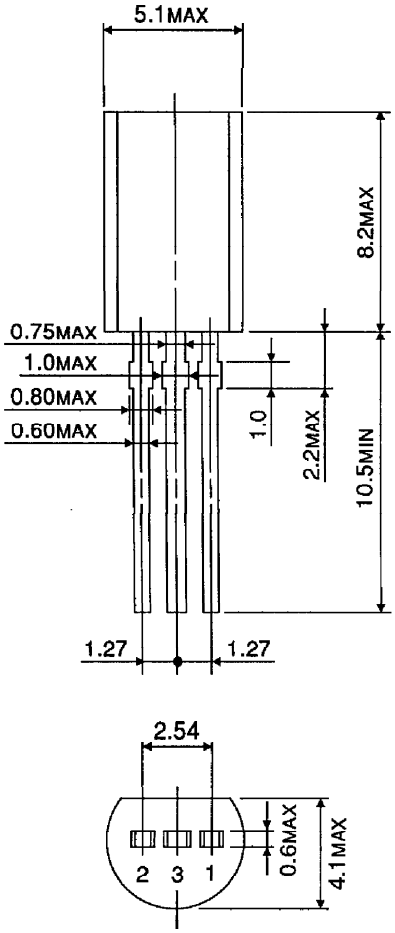

Weight : 0.36g (Typ.)