National Semiconductor

DM54/74S472 (512 x 8) 4096-Bit TTL PROM

General Description

This Schottky memory is organized in the popular 512 words by 8 bits configuration. A memory enable input is provided to control the output states. When the device is enabled, the outputs represent the contents of the selected word. When disabled, the 8 outputs go to the "OFF" or high impedance state.

PROMs are shipped from the factory with lows in all locations. A high may be programmed into any selected location by following the programming instructions.

Features

- Advanced titanium-tungsten (Ti-W) fuses
- Schottky-clamped for high speed
  - Address access down to—35 ns max
  - Enable access—25 ns max
  - Enable recovery—25 ns max
- PNP inputs for reduced input loading
- All DC and AC parameters guaranteed over temperature
- Low voltage TRI-SAFE™ programming
- TRI-STATE® outputs

Block Diagram

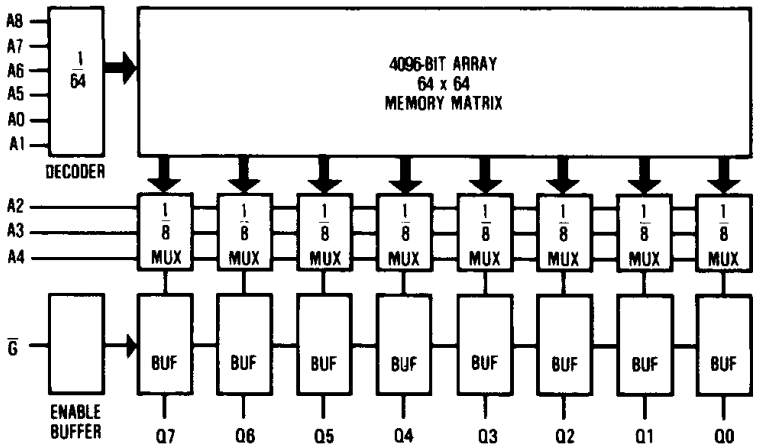

TL/D/9191-1

Pin Names

A0–A8	Addresses
$\overline{G}$	Output Enable
GND	Ground
Q0–Q7	Outputs
V_{CC}	Power Supply

Connection Diagrams

Dual-In-Line Package

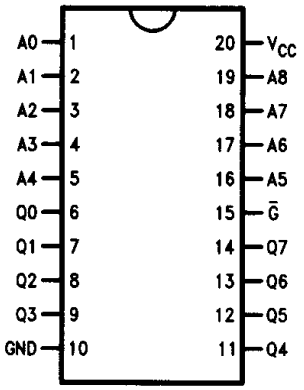

TL/D/9191-2

Top View

Order Number DM54/74S472J, 472AJ, 472BJ
DM74S472N, 472AN, 472BN
See NS Package Number J20A or N20A

Plastic Leaded Chip Carrier (PLCC)

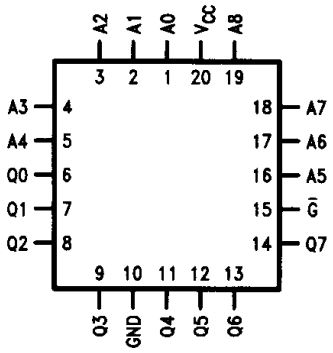

TL/D/9191-3

Top View

Order Number DM74S472V, 472AV, 472BV
See NS Package Number V20A

Ordering Information

Commercial Temp Range (0°C to +70°C)

Parameter/Order Number	Max Access Time (ns)
DM74S472AN	45
DM74S472BN	35
DM74S472N	60
DM74S472AJ	45
DM74S472BJ	35
DM74S472J	60
DM74S472AV	45
DM74S472BV	35
DM74S472V	60

Military Temp Range (−55°C to +125°C)

Parameter/Order Number	Max Access Time (ns)
DM54S472AJ	60
DM54S472BJ	50
DM54S472J	75

Absolute Maximum Ratings (Note 1)

If Military/Aerospace specified devices are required, please contact the National Semiconductor Sales Office/Distributors for availability and specifications.

Supply Voltage (Note 2)	−0.5V to +7.0V
Input Voltage (Note 2)	−1.2V to +5.5V
Output Voltage (Note 2)	−0.5V to +5.5V
Storage Temperature	−65°C to +150°C
Lead Temp. (Soldering, 10 seconds)	300°C
ESD to be determined	

Note 1: Absolute maximum ratings are those values beyond which the device may be permanently damaged. They do not mean that the device may be operated at these values.

Note 2: These limits do not apply during programming. For the programming ratings, refer to the programming instructions.

Operating Conditions

	Min	Max	Units
Supply Voltage (V_{CC})			
Military	4.50	5.50	V
Commercial	4.75	5.25	V
Ambient Temperature (T_A)			
Military	−55	+125	°C
Commercial	0	+70	°C
Logical "0" Input Voltage	0	0.8	V
Logical "1" Input Voltage	2.0	5.5	V

DC Electrical Characteristics (Note 1)

Symbol	Parameter	Conditions	DM54S472			DM74S472			Units
			Min	Typ	Max	Min	Typ	Max	
I_{IL}	Input Load Current	V_{CC} = Max, V_{IN} = 0.45V		−80	−250		−80	−250	μA
I_{IH}	Input Leakage Current	V_{CC} = Max, V_{IN} = 2.7V			25			25	μA
		V_{CC} = Max, V_{IN} = 5.5V			1.0			1.0	mA
V_{OL}	Low Level Output Voltage	V_{CC} = Min, I_{OL} = 16 mA		0.35	0.50		0.35	0.45	V
V_{IL}	Low Level Input Voltage				0.80			0.80	V
V_{IH}	High Level Input Voltage		2.0			2.0			V
V_C	Input Clamp Voltage	V_{CC} = Min, I_{IN} = −18 mA		−0.8	−1.2		−0.8	−1.2	V
C_I	Input Capacitance	V_{CC} = 5.0V, V_{IN} = 2.0V T_A = 25°C, 1 MHz		4.0			4.0		pF
C_O	Output Capacitance	V_{CC} = 5.0V, V_O = 2.0V T_A = 25°C, 1 MHz, Outputs Off		6.0			6.0		pF
I_{CC}	Power Supply Current	V_{CC} = Max, Input Grounded All Outputs Open		110	155		110	155	mA
I_{OS}	Short Circuit Output Current	V_O = 0V, V_{CC} = Max (Note 2)	−20		−70	−20		−70	mA
I_{OZ}	Output Leakage (TRI-STATE)	V_{CC} = Max, V_O = 0.45V to 2.4V Chip Disabled			+50			+50	μA
					−50			−50	μA
V_{OH}	Output Voltage High	I_{OH} = −2.0 mA	2.4	3.2					V
		I_{OH} = − 6.5 mA				2.4	3.2		V

Note 1: These limits apply over the entire operating range unless stated otherwise. All typical values are for V_{CC} = 5.0V and T_A = 25°C.

Note 2: During I_{OS} measurement, only one output at a time should be grounded. Permanent damage may otherwise result.