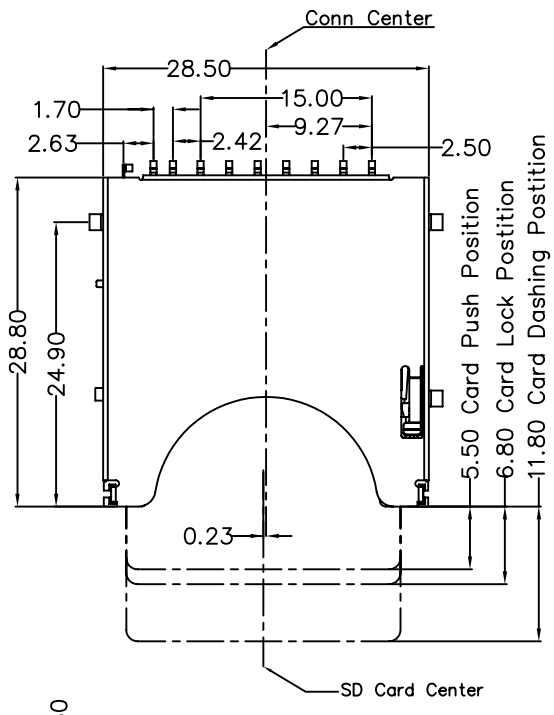

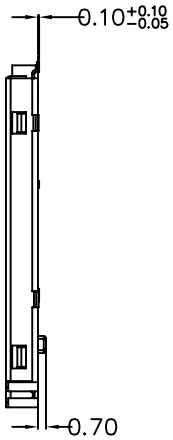

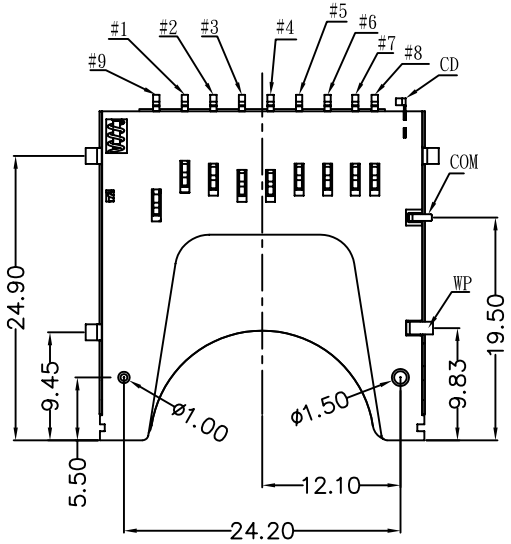

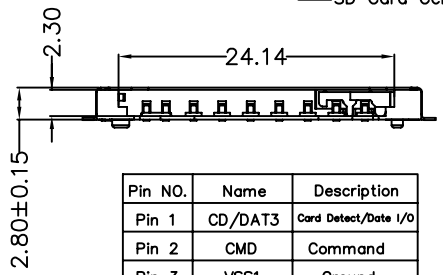

Pin NO.	Name	Description
Pin 1	CD/DAT3	Card Detect/Date I/O
Pin 2	CMD	Command
Pin 3	VSS1	Ground
Pin 4	VDD	Power
Pin 5	CLK	Clock
Pin 6	VSS2	Ground
Pin 7	DAT0	Data I/O
Pin 8	DAT1	Data I/O
Pin 9	DAT2	Data I/O

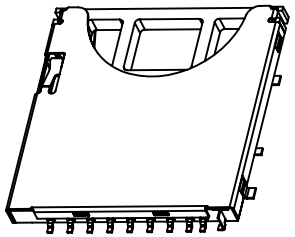

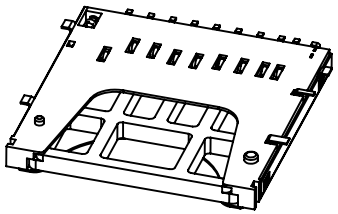

SPECIFICATION

1. General Characteristics:
   SD Memory Card Connector
   Push In-Push Out, Normal Type
   Card Detect Enable, Write Protect Enable
   Durablity: 10000 Cycles Min.
   Card Insertion Force: 1.40Kgf Max.
   Card Withdraw Force: 0.15Kgf Min.
   Stand Off= 0.00 mm

2. Material & Finish:
   Housing: High Temperature Thermoplastic Glass Fibre Filled, UL94 V-0
   Contact: Phosphor Bronze
   Finish: Gold Flash Over Nickel .
   Shell: Stainless Steel

3. Electrical Characteristics:
   Voltage Rating: 100V
   Current Rating: 0.5A
   Insulator Resistance: 1000M Ohms Min.
   Contact Resistance: 80m Ohms Max.
   Dielectric Withstanding Voltage: AC 500V

4. Solderability
   Wave: Not Applicable
   Vapor Phase: 215°C, 30 Sec. Max.
   IR Reflow: 260°C, 15 Sec. Max.
   Manual Soldering: 360°C, 3 Sec. Max.

5. Environmental Characteristcs:
   Operation Temperature: -20°C~+85°C.
   Operating Humidity: 10%~95% RH
   Storage Temperature : -20°C To +85°C
   Storage Humidity: 10%~95% RH

6, RoHS Compliant

4UCON 元化興業股份有限公司
4UCON TECHNOLOGY INC.

DRAWING No.	APPROVED BY MEI	UNLESS OTHERWISE SPECIFIED TOLERANCES ARE
19607	CHECKED BY SHIN	.X ±0.38
	DRAWING BY KENVIN 04/14/2009	.XX ±0.25
		ANG. ±1°
SCALE NONE	REV. A0	UNIT mm

NO	REV.	REVISIONS	CHK	DATE
0	A0	NEW RELEASE	KENVIN	04/08/2009

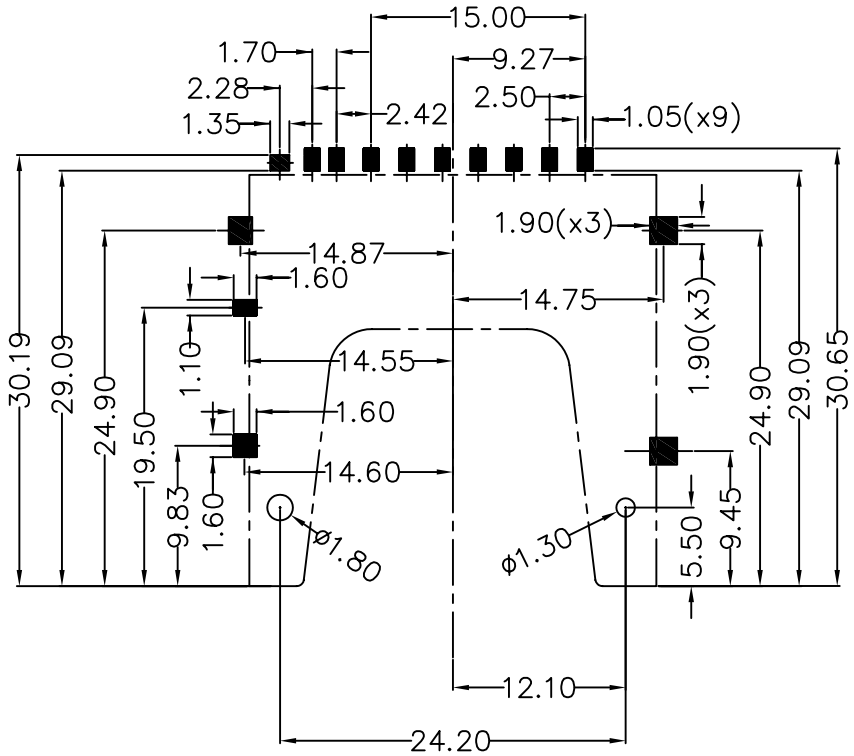

Reference PCB Layout
(Tolerances : .XX ±0.05)

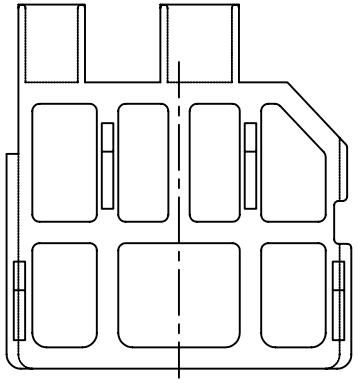

SD Dummy Card

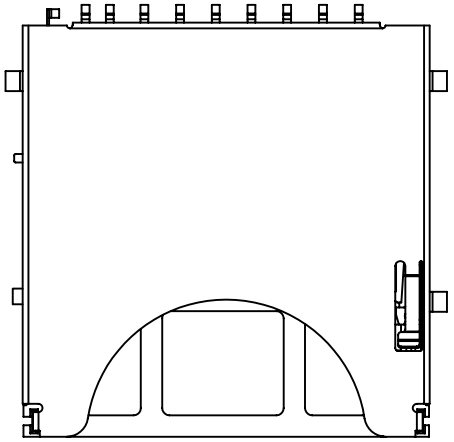

Notes: Please keep "dummy card" being inserted into connector while soldering process.

Switches Circuit Schematic

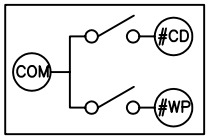

Without Card

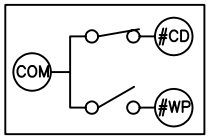

Card Inserted
Write Protect: lock

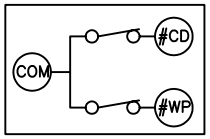

Card Inserted
Write Protect: Unlock

4UCON 元化興業股份有限公司
4UCON TECHNOLOGY INC.

DRAWING No.	APPROVED BY	UNLESS OTHERWISE SPECIFIED TOLERANCES ARE
19607	MEI	.X ±0.38
	CHECKED BY SHIN	.XX ±0.25
	DRAWING BY KENVIN 04/14/2009	ANG. ±1°
SCALE NONE	REV. A0	UNIT mm

NO	REV.	REVISIONS	CHK	DATE
0	A0	NEW RELEASE	KENVIN	04/08/2009