FORWARD INTERNATIONAL ELECTRONICS LTD.

SEMICONDUCTOR
TECHNICAL DATA

MPSA42/43
EPITAXIAL PLANAR NPN TRANSISTOR

HIGH VOLTAGE APPLICATION.
TELEPHONE APPLICATION.

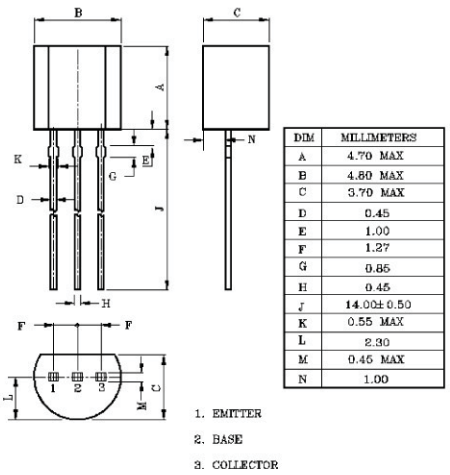

DIM	MILLIMETERS
A	4.70 MAX
B	4.80 MAX
C	3.70 MAX
D	0.45
E	1.00
F	1.27
G	0.85
H	0.45
J	14.00±0.50
K	0.55 MAX
L	2.30
M	0.45 MAX
N	1.00

TO-92

MAXIMUM RATINGS (Ta=25℃)

CHARACTERISTIC		SYMBOL	RATING	UNIT
Collector-Base Voltage	MPSA42	V_{CBO}	300	V
	MPSA43		200	
Collector-Emitter Voltage	MPSA42	V_{CEO}	300	V
	MPSA43		200	
Emitter-Base Voltage		V_{EBO}	6.0	V
Collector Current		I_C	500	mA
Emitter Current		I_E	-500	mA
Collector Power Dissipation		P_C	625	mW
Junction Temperature		T_j	150	℃
Storage Temperature Range		T_{stg}	-55~150	℃

ELECTRICAL CHARACTERISTICS (Ta=25℃)

CHARACTERISTIC		SYMBOL	TEST CONDITION	MIN.	TYP.	MAX.	UNIT
Collector-Base Breakdown Voltage	MPSA42	$V_{(BR)CBO}$	I_C=100μA, I_E=0	300	-	-	V
	MPSA43			200	-	-	
Collector-Emitter Breakdown Voltage	MPSA42	$V_{(BR)CEO}$	I_C=1.0mA, I_B=0	300	-	-	V
	MPSA43			200	-	-	
Collector Cut-off Current	MPSA42	I_{CBO}	V_{CB}=200V	-	-	0.1	μA
	MPSA43		V_{CB}=160V	-	-	0.1	
Emitter Cut-off Current	MPSA42	I_{EBO}	V_{EB}=6V	-	-	0.1	μA
	MPSA43		V_{EB}=4V	-	-	0.1	
DC Current Gain		* h_{FE}	I_C=1.0mA, V_{CE}=10V	40	-	-	
			I_C=10mA, V_{CE}=10V	40	-	-	
			I_C=30mA, V_{CE}=10V	40	-	-	
Collector-Emitter Saturation Voltage		* $V_{CE(sat)}$	I_C=20mA, I_B=2.0mA	-	-	0.5	V
Base-Emitter Saturation Voltage		* $V_{BE(sat)}$	I_C=20mA, I_B=2.0mA	-	-	0.9	V
Transition Frequency		f_T	V_{CE}=20V, I_C=10mA, f=100MHz	50	-	-	MHz
Collector Output Capacitance	MPSA42	C_{ob}	V_{CB}=20V, I_E=0, f=1MHz	-	-	3.0	pF
	MPSA43			-	-	4.0	

*Pulse Test : Pulse Width≦300μS, Duty Cycle≦2.0%

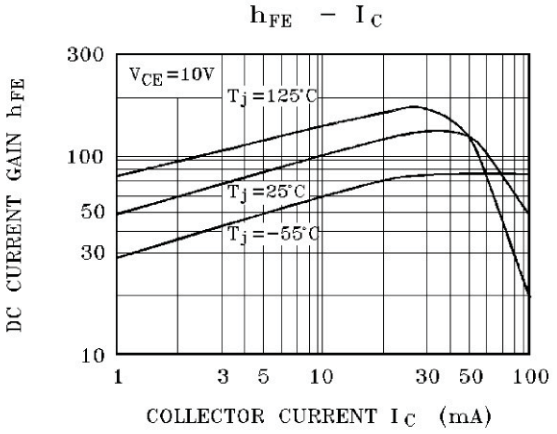
hFE – IC
DC CURRENT GAIN hFE
VCE=10V
Tj=125°C
Tj=25°C
Tj=−55°C
300
100
50
30
10
1
3
5
10
30
50
100
COLLECTOR CURRENT IC (mA)

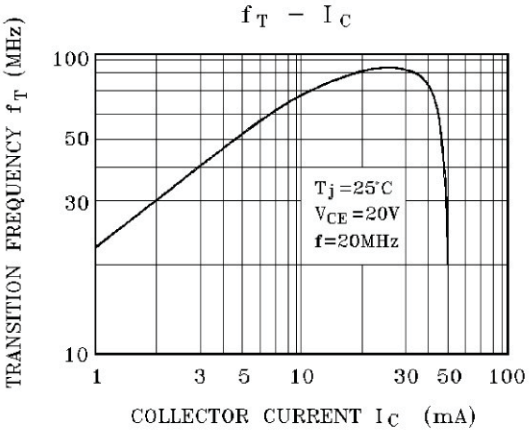
fT – IC
TRANSITION FREQUENCY fT (MHz)
Tj=25°C
VCE=20V
f=20MHz
100
50
30
10
1
3
5
10
30
50
100
COLLECTOR CURRENT IC (mA)

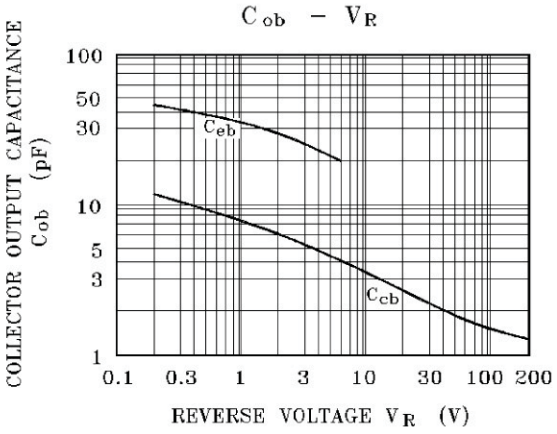
Cob – VR
COLLECTOR OUTPUT CAPACITANCE Cob (pF)
Ceb
Ccb
100
50
30
10
5
3
1
0.1
0.3
1
3
10
30
100
200
REVERSE VOLTAGE VR (V)

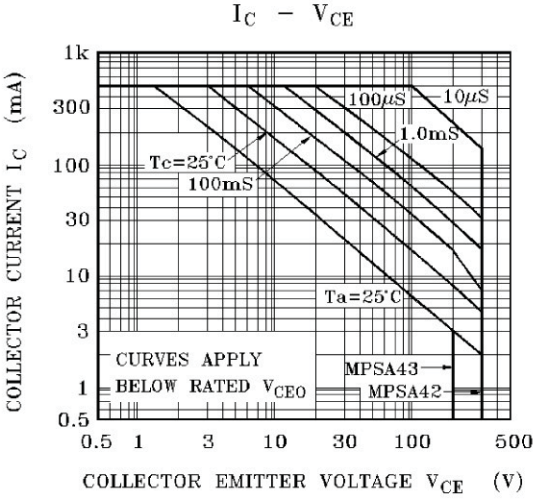
IC – VCE
COLLECTOR CURRENT IC (mA)
100μS
10μS
1.0mS
Tc=25°C
100mS
Ta=25°C
CURVES APPLY
BELOW RATED VCEO
MPSA43
MPSA42
1k
300
100
30
10
3
1
0.5
0.5
1
3
10
30
100
500
COLLECTOR EMITTER VOLTAGE VCE (V)

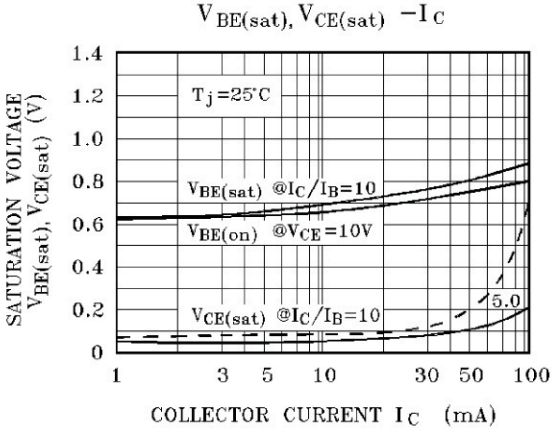
VBE(sat), VCE(sat) –IC
SATURATION VOLTAGE VBE(sat), VCE(sat) (V)
Tj=25°C
VBE(sat) @IC/IB=10
VBE(on) @VCE=10V
VCE(sat) @IC/IB=10
5.0
1.4
1.2
1.0
0.8
0.6
0.4
0.2
0
1
3
5
10
30
50
100
COLLECTOR CURRENT IC (mA)